DOMETIC

AIR CONDITIONERS
CALR 242

EN

Air conditioning roof unit
Installation and Operating Manual

RECORD THIS UNIT INFORMATION FOR FUTURE REFERENCE:	
Type Number	_____
Product Number	_____
Serial Number	_____
ADB Number	_____
ADB Serial Number	_____
Date Purchased	_____

Roof Top Unit			
Description	Model	Type	Use With Air Distribution Box Model
Heat Pump	B3200	3242CX51R	3311669.018CY1

Dometic Australia
1 John Duncan Court
Varsity Lakes, QLD 4227

sales@dometic.com.au
www.dometic.com.au
Tel: +61 7 5507 6000
Fax: +61 7 5507 6001

Note: Air Distribution Box installation requires a #2 Phillips screwdriver with a 7 mm maximum diameter x 35 mm minimum length.

WARNING

This manual must be read and understood before installation, adjustment, service, or maintenance is performed. This unit must be installed by a qualified service technician. Modification of this product can be extremely hazardous and could result in personal injury or property damage.

INSTALLATION & OPERATING INSTRUCTIONS

Type

3242CX51R(CALR242)

REVISION
Form No. 54-AA-MA3200CY2

MOBICOOL Electronic(Zhuhai)Co., Ltd
18, Jinhu Lu, Sanzao, Jinwan Zhuhai, China

Important: These Instructions must stay with unit. Owner read carefully.

SAFETY INSTRUCTIONS

This manual has safety information and instructions to help users eliminate or reduce the risk of accidents and injuries.

RECOGNIZE SAFETY INFORMATION

This is the safety-alert symbol. When you see this symbol in this manual, be alert to the potential for personal injury.

Follow recommended precautions and safe operating instructions.

UNDERSTAND SIGNAL WORDS

A signal word , **WARNING** OR **CAUTION** is used with the safety-alert symbol. They give the level of risk for potential injury.

⚠ WARNING indicates a potentially hazardous situation which, if not avoided, could result in death or serious injury.

⚠ CAUTION indicates a potentially hazardous situation which, if not avoided, may result in minor or moderate injury.

CAUTION used without the safety alert symbol indicates, a potentially hazardous situation which, if not avoided, may result in property damage.

⚠ WARNING this appliance can be used by children aged from 8 years and above and persons with reduced physical, sensory or mental capabilities or lack of experience and knowledge if they have been given supervision or instruction concerning use of the appliance in a safe way and understand the hazards involved. Children shall not play with the appliance. Cleaning and user maintenance shall not be made by children without supervision. a disconnection incorporated in the fixed wiring is to be provided

Read and follow all safety information and instructions.

GENERAL INFORMATION

A. Product features or specifications as described or illustrated are subject to change without notice.

B. This Air Conditioner/Heat Pump (hereinafter referred to as the "unit" Is Designed For:

1. Installation on a Caravan or Motor Home during or after the time the vehicle is manufactured.
2. Mounting on the roof of a Caravan or Motor Home.
3. Roof construction with rafters/joists support frames on minimum of 406 mm centers.
4. Minimum of 25 mm and maximum of 140 mm distance between roof to ceiling of Caravan.

C. Basic Requirements

1. Installation opening. Cut through the roof and ceiling.
2. 220-240 VAC, 50 Hz. 10 Amp.
3. Power when the unit starts must be above 198 VAC and the frequency must be 50 Hz at all times.

D. The ability of the air conditioner to maintain the desired inside temperature depends on the heat gain of the Vehicle.

Some preventative measures taken by the occupants of the Vehicle can reduce the heat gain and improve the ability of the air conditioner to cool the Caravan. During extremely high outdoor temperatures, the heat gain of the Vehicle may be reduced by:

1. Parking the Vehicle in a shaded area
2. Using window shades (blinds and/or curtains)
3. Keeping windows and doors shut or minimizing usage
4. Avoiding the use of heat producing appliances

Operation on High Fan/Cooling mode will give optimum or maximum efficiency in high humidity or high outside temperatures.

Starting the air conditioner early in the morning and giving it a "head start" on the expected high outdoor ambient will greatly improve its ability to maintain the desired indoor temperature.

For a more permanent solution to high heat gain, accessories like an outdoor patio and window awning will reduce heat gain by removing the direct sun. They also add a nice area to enjoy company during the cool of the evening.

E. Condensation

Note: The manufacturer of this unit will not be responsible for damage caused by condensed moisture on ceilings or other surfaces. Air contains moisture and this moisture tends to condense on cold surfaces. When air enters the Vehicle, condensed moisture may appear on the ceiling, windows, metal parts, etc. The air conditioner removes this moisture from the air during normal operation. Keeping doors and windows closed when this air conditioner is in operation will minimize condensed moisture on cold surfaces.

Specifications

Type	3242CX51R
A /C OR H/P	H/P
Nominal Cooling Capacity (KW)	3.2
ISO5151 Cooling Capacity (KW)	2.3
ISO5151 Heating Capacity (KW)	2.1
Electrical Rating	220 - 240 VAC 50 Hz., 1 Ph
Full Load Amps (Compressor / Motor)	5.08/0.92
Locked Rotor Amps (Comp / Motor)	19 / 2.3
Power (KW) Compressor + Motor	1.34
Minimum Wire Size	Up to 8 meters use 1.5 mm^2, Copper. Consult Regulatory Codes.
Circuit Protection	10 Amp Time Delay Fuse, or Circuit Breaker
* Generator Size	1 Unit - 3.5 KW 2 Unit - 5.0 KW
Operating Temperature Range (°C)	-7 ~ 43 (Noted: Performance will be reduced when operating below <7(heating) or >35(cooling) temperature.)

* The manufacturer gives **GENERAL** guidelines for generator requirements. These guidelines come from experiences people have had in actual applications. When sizing the generator, the total power usage of your Caravan must be considered. Keep in mind generators lose power at high altitudes and from lack of maintenance.

INSTALLATION INSTRUCTIONS

A. Precautions

⚠ WARNING

Improper installation may damage equipment, could endanger life, cause serious injury and/ or property damage.

1. Read Installation and Operating Instructions carefully before attempting to start this unit installation.
2. The manufacturer will not be liable for any damages or injury incurred due to failure in following these instructions.
3. The equipment shall be installed in accordance with national wiring regulation per **IEC 335-2-40, CI, 7.12.1**. Installation must comply with all applicable codes and/or regulations.
4. **DO NOT** add any devices or accessories to this unit except those specifically authorized in writing by Dometic Mobicool.
5. This equipment must be serviced by qualified personnel and some localities require these people to be licensed.

B. Choosing Proper Location For The Unit

This unit is specifically designed for installation on the roof of a Caravan. When determining your cooling requirements, the following should be considered:

- Size of Caravan or Motor Home;
- Window area (increases heat gain);
- Amount of insulation in walls and roof;
- Geographical location where the Caravan or Motor Home will be used;
- Personal comfort level required.
  1. Normal location-The unit is designed to fit over an existing roof vent opening.
  2. Other locations - When no roof vent is available or another location is desired, the following is recommended:
     a. For one unit installation: The unit should be mounted slightly forward of center (front to back) and centered from side to side.
     b. For two unit installations: Install one unit 1/3 and one unit 2/3's from front of Caravan or Motor Home and centered from side to side.

FIG. 1

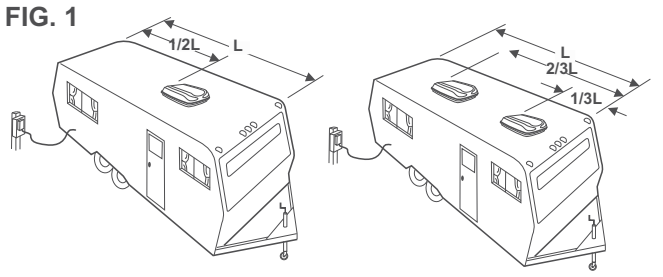

It is preferred that the unit be installed on a relatively **flat and level** roof section measured with the Vehicle parked on a level surface, but up to a 8° tilt is acceptable.

3. After location has been selected:
   a. Check for obstructions in the area where unit will be installed. See FIG. 2.

FIG. 2

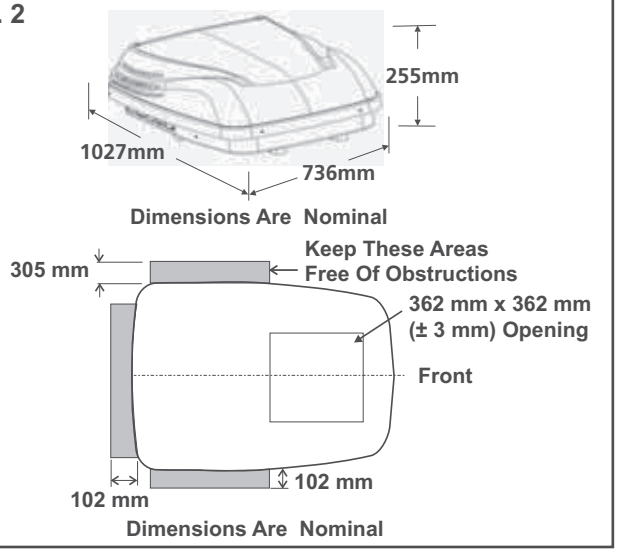

b. The roof must be designed to support 65 Kg. when the Vehicle is in motion. Normally a 100 Kg. static load design will meet this requirement.

CAUTION

It is the responsibility of the installer of this system to ensure structural integrity of the Vehicle roof. Never create a low spot on the roof where water will collect. Water standing around the unit may leak into the interior causing damage to the product and the Vehicle.

c. Check inside the Vehicle for air distribution box obstructions (i.e. door openings, room dividers, curtains, ceiling fixtures, etc.). See FIG. 3.

FIG. 3

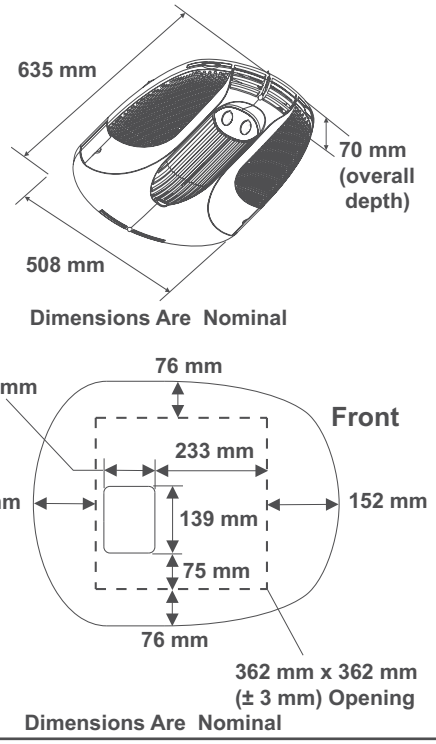

C. Roof Preparation

1. Opening requirements - Before preparing the ceiling opening, read all of the following instructions before beginning the installation.
   If an existing roof vent opening will not be used a 362 mm x 362 mm (± 3 mm) opening must be cut through the roof and ceiling of the Vehicle. This opening must be located between the roof reinforcing members.

⚠WARNING

There may be electrical wiring between the roof and the ceiling. Disconnect 220 - 240 VAC power cord and the positive (+) 12 VDC terminal at the supply battery. Failure to follow this instruction may create a shock hazard causing death or severe personal injury.

   The 362 mm x 362 mm (± 3 mm) opening is part of the return air system of the unit and must be finished in accordance with all applicable national and local codes and/or regulations.
2. Roof vent removal
   a. Unscrew and remove the roof vent.
   b. Remove all caulking compound around opening.
   c. Seal all screw holes and seams where the roof gasket will be located. Use a good grade of all weather sealant. See FIG. 4

FIG. 4

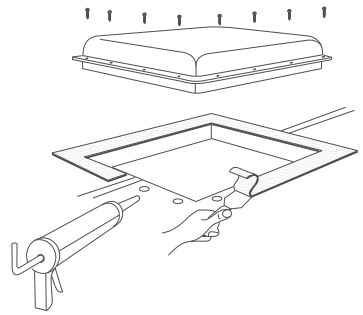

   d. If the opening exceeds 365 mm x 365 mm, it will be necessary to re-size the opening to 362 mm x 362 mm (± 3 mm).
   e. If the opening is less than 359 mm x 359 mm, it must be enlarged to 362 mm x 362 mm (± 3 mm).
3. New opening - (Installation other than vent opening)
   a. Mark a 362 mm x 362 mm (± 3 mm) square on the roof and carefully cut the opening.
   b. Using the roof opening as a guide, cut the matching hole in the ceiling.
   c. The opening created must be framed to provide adequate support and prevent air from being drawn from the roof cavity. Framing stock 19 mm or more in thickness must be used. Remember to provide an entrance hole for power supplies at the front of the opening. See FIG. 5.

FIG. 5

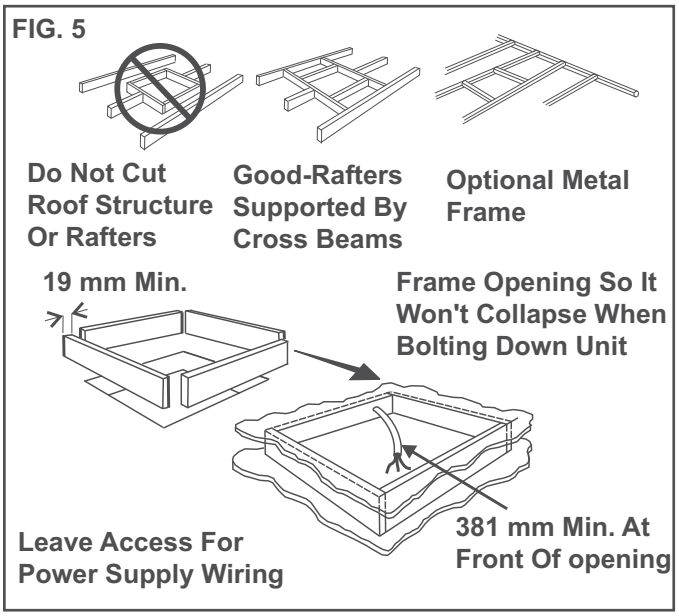

CAUTION

It is the responsibility of the installer of this system to ensure structural integrity of the Vehicle roof. Never create a low spot on the roof where water will collect. Water standing around the unit may leak into the interior causing damage to the product and the Vehicle.

D. Wiring Requirements

1. 220 - 240 VAC Supply Wire
   Route a copper, with ground, 220 - 240 VAC supply wire from the time delay fuse or circuit breaker box to the roof opening. The proper size wire can be determined from chart on page 3.

Note: If vent fan was removed, the existing wire may be used provided it is of proper size, location and correctly fused.

a. This supply wire must be located in the front portion of the 362 mm x 362 mm (± 3 mm) opening.
b. The power MUST be on an appropriately sized separate time delay fuse or circuit breaker. The proper protection can be determined from chart on page 3.
c. Make sure that at least 380 mm of supply wire extends into the roof opening. This ensures an easy connection at the junction box.
d. Wiring methods must comply with all national and local wiring codes and/or regulations.
e. Protect the wire where it passes into the opening with approved method. See paragraph "d" above.

Note: These power supply connections may be replaced with type Y attachments if done by qualified personal.

E. Placing Unit On The Roof

⚠ CAUTION

This unit weighs approximately 45 Kilograms. To prevent back injury, use a mechanical hoist to place unit on roof.

1. Remove the unit from the carton and discard carton.
2. Place the unit on the roof.
3. Lift and place the unit over the prepared opening using the gasket on the unit as a guide. See FIG. 6.

FIG. 6

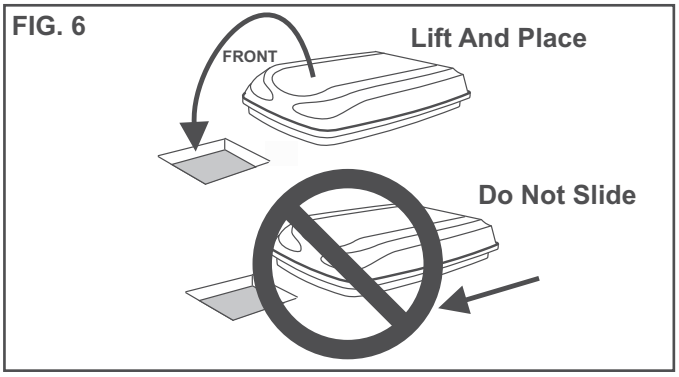

CAUTION

Do not slide the unit. This may damage the roof gasket attached to the bottom and may create a leaky installation.

4. Place the air distribution box kit inside the Vehicle. This box contains mounting hardware for the unit and will be used inside the Vehicle.

This completes the outside work. Minor adjustments can be done from the inside of the Vehicle if required.

F. Installing The Unit

1. Remove air distribution box and mounting hardware from carton.
2. Check for correct alignment and adjust the unit as necessary (Roof gasket centers over the 362 mm x 362 mm (± 3 mm) opening.

3. Base Pan Duct Adapter
   a. Remove the liner from the foam tape and position on the base so screw hole and air openings are aligned. Place flange of duct on right hand side when facing front. See FIG. 7.

FIG. 7

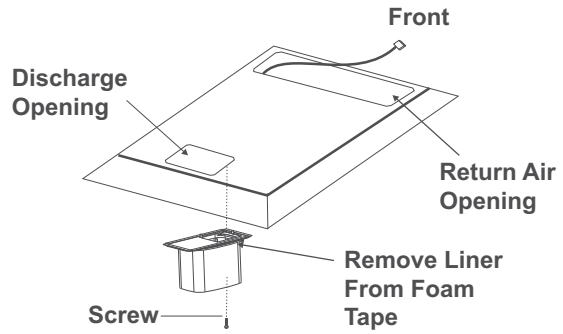

   b. Install # 10 screw to help hold the duct adapter to base pan if desired.
4. Ceiling template installation

Note: The large center hole in the ceiling template goes to the rear. See FIG. 10.

   a. Reach up into the return air opening and pull the unit electrical wires down for later connection. See FIG. 8.

FIG. 8

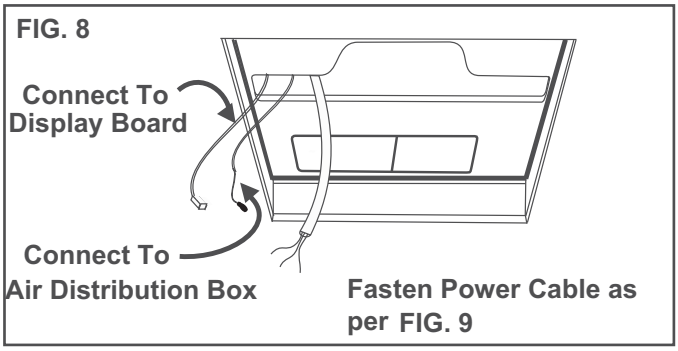

   b. Connect the AC power lead and the AC power supply cable together within connection housing FIG. 9.
   c. Connect the air sensor to the right hand side of the mounting frame in the special clips. Pull the outer plastic covering of the wire back to enable the wire to clip in place. The outer wiring cover will then hold the wire in place.

Power cable and sensor wiring

FIG. 9

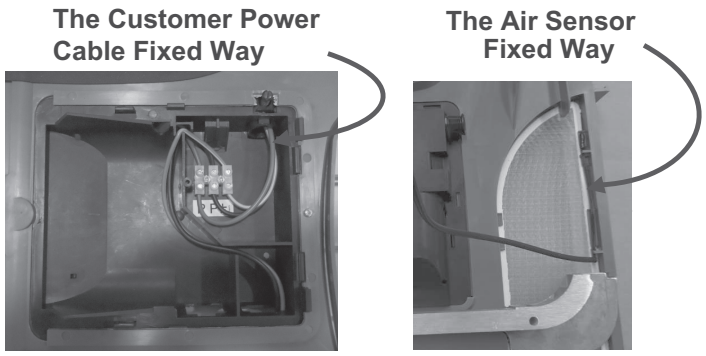

5. **EVENLY TIGHTEN MOUNTING BOLTS TO A TORQUE OF 4.5 TO 5.6 NM** (Newton Meters). This will compress the roof gasket to approximately 13 mm. The bolts are self locking so further tightening is not necessary. See FIG. 10.

FIG. 10

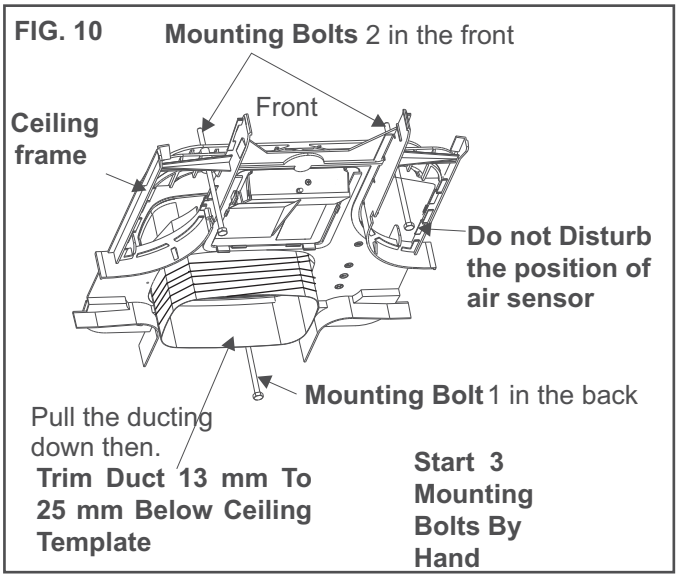

CAUTION

If bolts are left loose there may not be an adequate roof seal or if over tightened, damage may occur to the unit base or ceiling template. Tighten to torque specifications listed in this manual.

6. Template/Duct adapter
   a. Pull duct down through the template opening.
   b. Cut the duct 13 mm to 25 mm below the template opening. See FIG. 10.
   c. Align the template duct adapter with the template duct hole making sure the screw holes line up (if not, rotate 1/2 turn). Insert template duct adapter into duct. Leave one loop of wire below the duct adapter groove. Do not insert adapter tabs inside the duct.
   d. Snap duct adapter into template and install 2 screws through the duct adapter tabs into the ceiling template. See FIG. 11.

FIG. 11

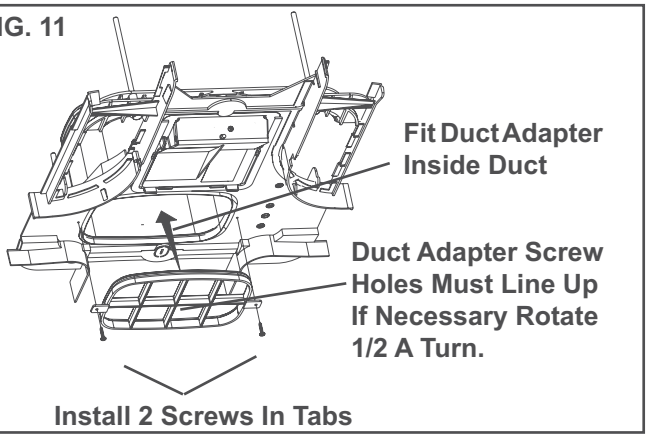

G. Wiring The System

⚠ WARNING

Disconnect 220 - 240 VAC. Failure to follow these instructions could create a shock hazard causing death or severe personal injury.

Important: The electrical installation must be done by an authorized electrician. In some areas electricians must be licensed.

a. Install the strain relief in the junction box.
b. Route the previously run 220-240 VAC power supply wire through the strain relief into the junction box. Tighten connector making sure not to damage wire.
c. Remove the rear panel of the digital display(2 screws) plug the communication cable into the display and replace the rear panel.

H. Air Distribution Box Installation

Important: The inner walls of the ADB go inside the walls of the ceiling template during installation.

1. Working from the rear looking forward with the rear tipped down 80 mm place the air distribution box inner walls against the inside of the template walls. Pull the air distribution box backwards until it touches the template. Raise the air distribution box to the ceiling. See FIG 12.

FIG. 12

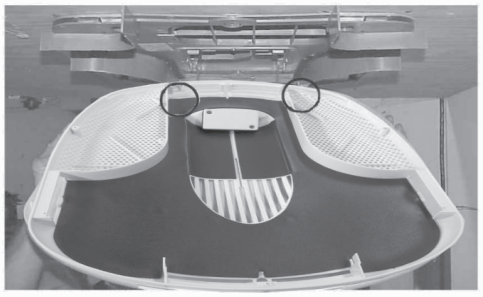

Position ADB Walls Inside And Against End Of Template Walls

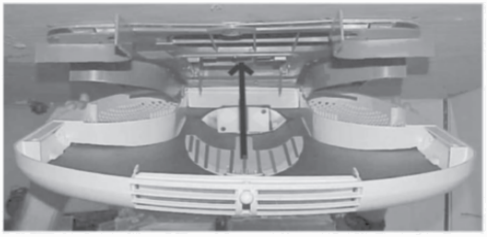

Raise Back End Of ADB To Ceiling

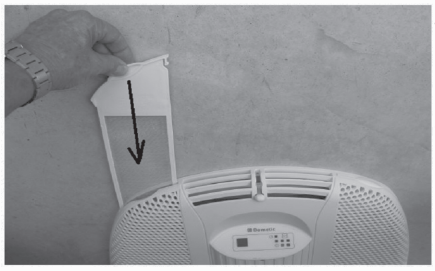

While holding the box against the ceiling slide both air filters into place

The filters will hold the box in place while the screws are fitted

FIG. 13

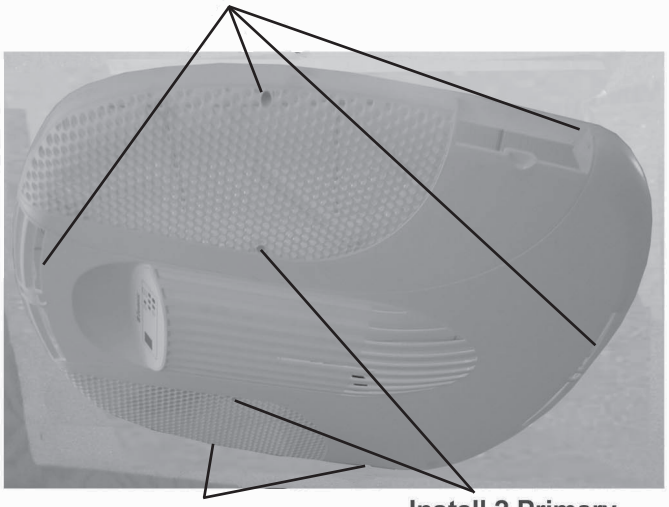

2. Holding the ADB box up against the ceiling slide both air filters into place, this will temporally hold the box in place.

3. Hold the air distribution box to the ceiling with one hand and install two coarse threaded 3.5 mm X 19 mm sharp pointed screws in the location shown in FIG.13 . Do not use electric driver as you may strip the holes in the plastic.
4. Auxiliary screws may be installed at the locations shown. These are **NOT** required to secure the ADB to the template, but may be desired for aesthetic purposes in some ceiling geometries.
   Again, do not use an electric driver as you may over tighten the screws.
5. Check that the air filters are free to be removed and replaced.

6. Your unit is now installed and ready for operation. Read the following operating instructions before attempting to run the unit.

FUNCTION DISPLAY

Digital display.
Displays set temperature.
(Flash when receiving a command)

Power Status, (Green when power is on. Stand by mode.)

Auto Button.

FIG. 14

Timer Status, (Yellow when timer is set)

Heating Status, (Orange when in heating mode)

Cooling Status, (Blue when in cooling mode)

Auto button.
If the remote control is damaged or lost pressing the Auto button will run the air conditioner at the automatic mode (see next page table A).

If the room temperature is below 20 degrees the unit will run in heat mode (HP model) and ventilation mode (A/C model)
If the room temperature is above 25 degrees the unit will run in cooling mode.
The fan speed will be set to automatic.

OPERATING INSTRUCTIONS

A.Remote control

Selecting functional status
FIG. 15

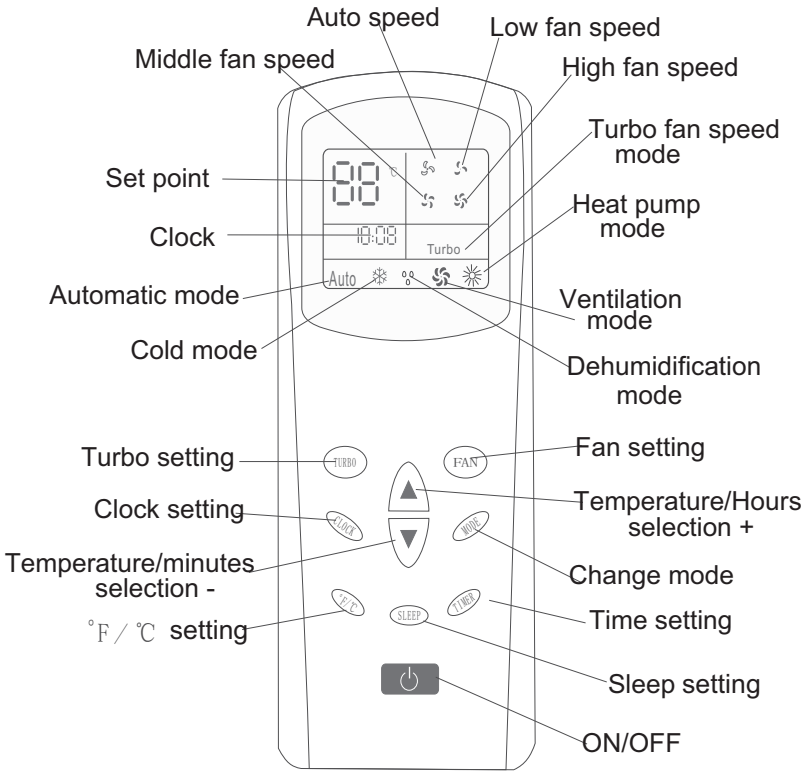

B. Operation

a. Press ⏻ to switch on the machine.The previous operating mode that was selected by the remote control is automatically used.

b. Press MODE to select mode.

Automatic mode

In this mode the A/C will run automatically and the running mode will be selected automatically by comparing the set temperature with the internal temperature according to table A.
For the automatic speed it wil be set according to the difference temperature between the set point and the ambient temperature.

TABLE A

Internal temperature	T≤20℃	20℃<T<25℃	T≥25℃
Operating mode	Heat pump (HP model) or ventilation (A/C model)	Dehumidification (A/C model) or ventilation (HP model)	Cold
Set point	20℃	22℃	25℃

Cold mode

Press MODE button to select cold mode then set the expected temperature between 18°C and 30°C.
Press the fan speed button to select low, medium or high fan speed or automatic speed.

Dehumidification mode

Press MODE button to select this function and set the expected tmeperature between 18°C and 30°C.
The fan speed will keep the low level.

Ventilation mode

Press MODE button to select ventilation mode then the low, medium or high speed or automatic speed.

Heat pump mode

(Reverse cycle where applicable)

Press MODE button to select heat pump mode then set the expected temperature between 18°C and 30°C.
Press the fan speed button to select low, medium or high fan speed or automatic speed.

Timer off function

The machine must be on.
Press TIMER button to set the time when the machine need to be switched off.
Press the selection button to change the time when the machine need to be switched off.
Press the TIMER buttom to confirm the data entered.

Timer on mode

The machine must be off.
Press TIMER button to set the time when the machine need to be switched on.
Press the selection button to change the time when the machine need to be switched on.
Press the TIMER buttom to confirm the data entered.

Note: The timer ON and OFF function can only operate when the hand held remote is in range and able to communicate with the air conditioner at the set time. Remote range may vary depending on the installation environment.

FAULT CODE & FUNCTION DESCRIPTIONS

Fault condition	Digital display code	Note
Room temperature sensor fault	E1	Call for service
Evaporator sensor fault	E2	Call for service
communication fault	E3	Call for service
Condenser sensor fault	E4	Call for service
Defrosting instructions	H1	Indicates defrosting in progress

A. Preventing cold air function:

- When heat mode is selected, the internal fan will not start until the air within the air conditioner is heated. This is to prevent cold air blowing into the living space during start up.

B. Blowing surplus heat function:

- In heating mode, the fan will continue to run for approximately 60 seconds after the OFF button is pressed.

C. Defrosting function:

- At low ambient temperatures approximately -5°C the heating mode will periodically enter a defrosting mode.

Note

- IPT:evaparator sensor temperature.
- OPT:condenser sensor temperature.

D. Overheat protection

- In heating mode, detection of the evaparator temperature IPT,

  when IPT $\geqslant$ 60°C, compressor is not working.

  when IPT $\leqslant$ 48°C, compressor will be contiunted working.

  when 48°C $<$ IPT $\leqslant$ 55°C. The compressor will keep the original state.

WIRING DIAGRAMS

3242CX51R (CALR 242) Reverse cycle version.

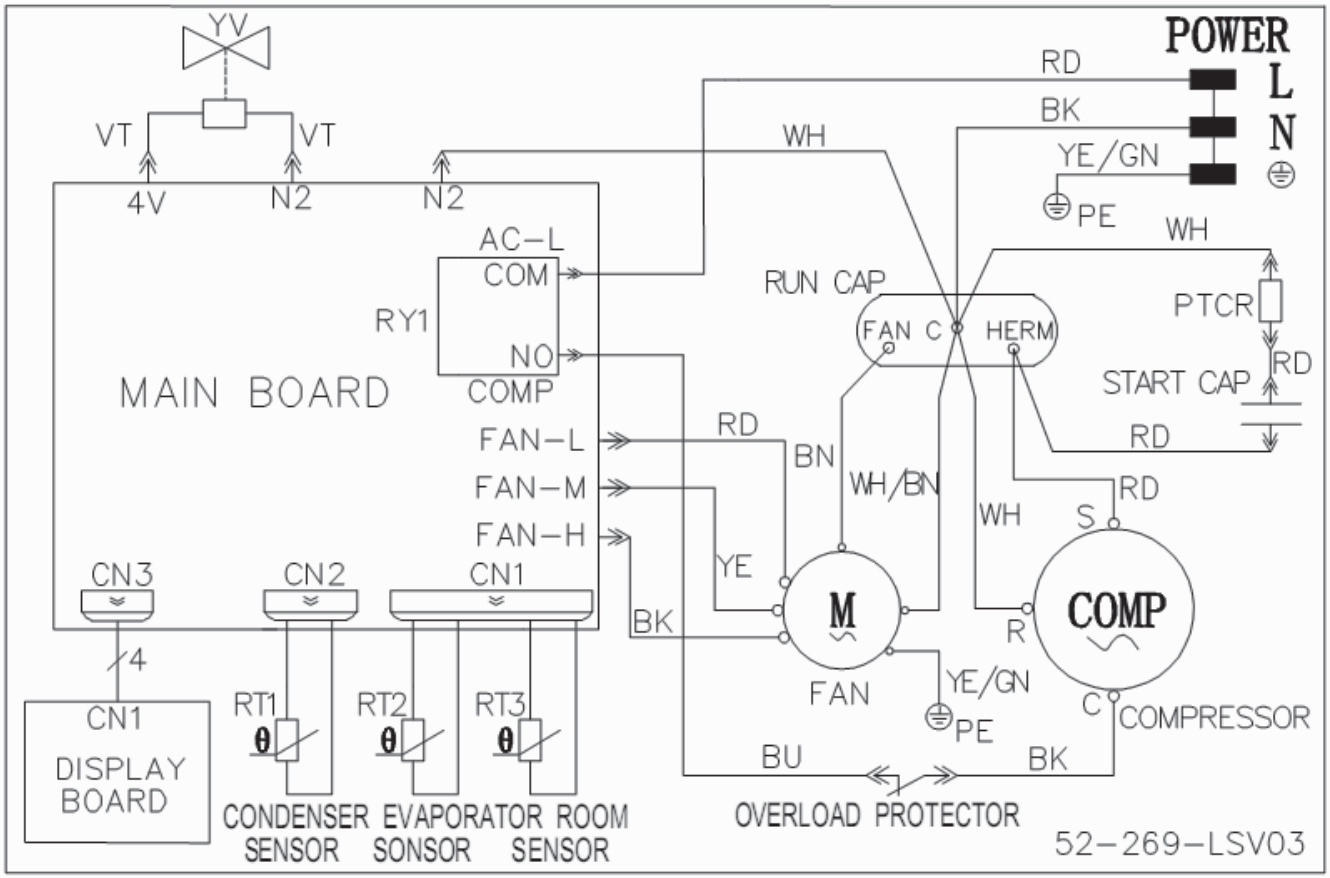

Scope of Delivery

Air distribution box

Items	Quantity
Operating manual	1PCS
Remote controller	1PCS
Battery	1PCS
Screw	11PCS
Electrical box cover (with warning and wiring drawing)	1PCS
Fillter	2PCS

Units

Items	Quantity
Air conditioner	1PCS

ROOF MOUNT ASSEMBLY

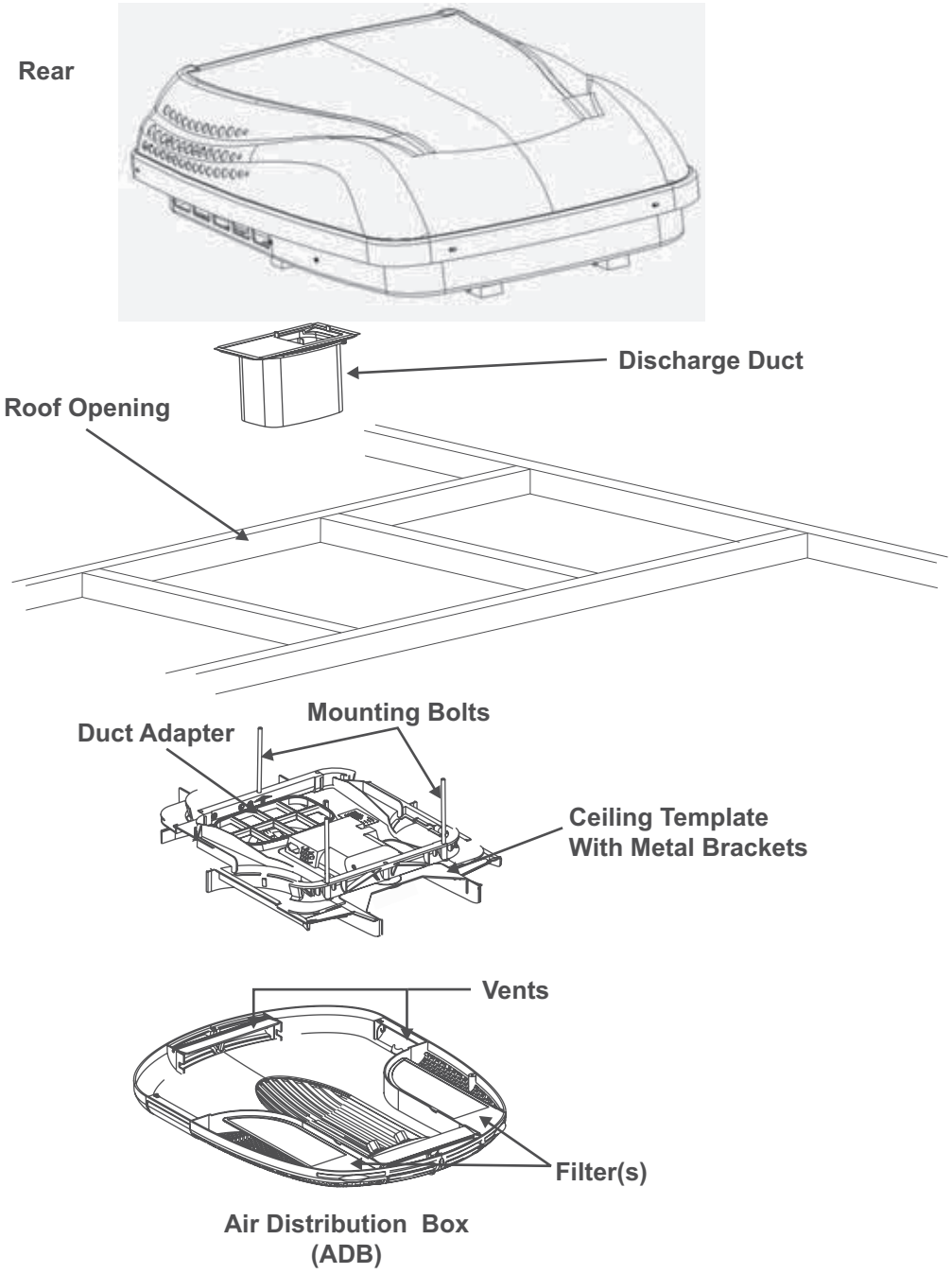

MAINTENANCE

A. Air Filter

1. Periodically (a minimum of every 2 weeks of operation) slide out the return air filters located on the end of the air distribution box. Wash the filters with soap and warm water, let dry and then reinstall.

Note: To insure easy future removal the filters need to be replaced with the domed side of their handle positioned towards the ceiling.

Note: Never run the unit without both return air filters in place. This will plug the unit evaporator coil with dirt and may substantially degrade the performance of the unit over time.

B. Air Distribution Box Housing

1. Clean air distribution box housing and control panel with a soft cloth dampened with a mild detergent. Never use furniture polish or scouring powders.

C. Fan Motor

1. The blower motor is factory lubricated and requires no service.

SERVICE-UNIT DOES NOT OPERATE

If your unit fails to operate or operates improperly, check the following before calling your service center.

A. If Caravan connected to motor generator, check to be sure motor generator is running and producing power.

B. If Caravan connected to power supply by a land line, check to be sure line is sized properly to run unit load and it is plugged into power supply.

C. Check your fuse or circuit breaker to see if it is open. Insure fuse is not burnt, or circuit breaker is "ON" and not activated.

D. After the above checks, call your local service center for further help. This unit must be serviced by qualified service personnel only.

E. If any wiring or supply cord is damaged and needs to be replaced, it must be replaced by the manufacturer or its service agent or a similarly qualified person.

F. When calling for service, always give the following:

1. Unit type and serial number found on identification label located on base pan of unit bottom. (Remove filter and view through network of holes)
2. Air distribution box model and serial number found on rating plate located on ceiling template. Observe this rating plate through the air distribution box right side vent opening.

Mobile living made easy.

DOMETIC

dometic.com

YOUR LOCAL DEALER

dometic.com/dealer

YOUR LOCAL SUPPORT

dometic.com/contact

YOUR LOCAL SALES OFFICE

dometic.com/sales-offices

4445101809 11/2019

A complete list of Dometic companies, which comprise the Dometic Group, can be found in the public filings of:
DOMETIC GROUP AB • Hemvärnsgatan 15 • SE-17154 Solna • Sweden