DOMETIC

WeatherPro

Power Awning

Control System

Control Box

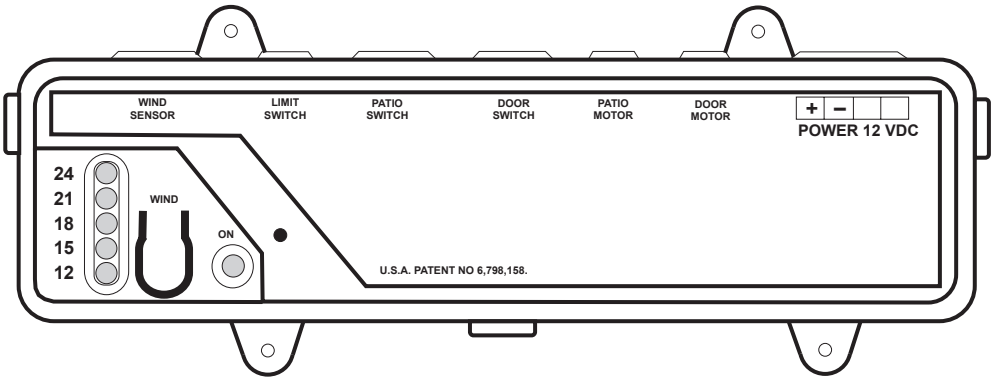

Remote Control (Key FOB)

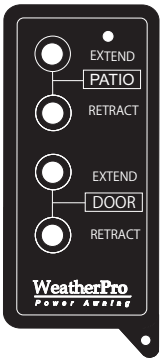

Remote Rocker Switch

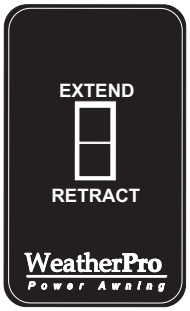

USA
SERVICE OFFICE
Dometic Corporation
1120 North Main Street
Elkhart, IN 46514

SERVICE CENTER & DEALER LOCATIONS
Please Visit:
www.Dometic.com

USER'S GUIDE

Electronic Control Kit
3310287.XXX
3311917.XXX

REVISION B
Form No. 3309525.057 1/19
©2019 Dometic Corporation
LaGrange, IN 46761

To Open Awning:

A. Using The Remote Control (Key FOB)

1. Press and hold the "Extend" button for 3 seconds and the awning will automatically open. If not held for three seconds the awning will remain in the position when button is released and will continue to extend when pressed again.

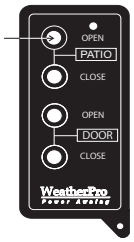

B. Using The Remote Rocker Switch

1. Press and hold the "Extend" button for 3 seconds and the awning will automatically open. If not held for three seconds the awning will remain in the position when button is released and will continue to extend when pressed again.

Note: To stop awning during automatic opening operation (remote control) simply press and release any key FOB button or the Remote Rocker Switch button. Awning will stop in the position when button was pressed. To resume "OPEN" operation, press the "OPEN" button once again. When using the Remote Rocker Switch follow the same sequence.

Important: When installed correctly on a motorized RV, this system is wired to prevent accidental awning "extension" when vehicle ignition key is in the "ON" position. When the ignition key is turned "ON", the "extension" mode is de-activated and awning will not extend. This however, will not prevent the awning from being retracted.

The WeatherPro awning is equipped with a wind sensing device that will automatically close the WeatherPro Patio awning when wind conditions are present that may damage the awning. The factory preset setting is 18 MPH. To activate the wind sensor feature, locate the control box (usually mounted in a storage compartment), simultaneously depress and hold buttons 1 & 2 on the Remote Control (Key FOB) for 3 seconds. One of the wind speed LED's will illuminate. Wind sensor is activated when shipped from the factory. The wind sensor should be enabled whenever possible.
To de-activate the wind sensor feature, simultaneously depress and hold buttons 3 & 4 on the Remote Control (Key FOB) for 3 seconds. There are no wind speed LED's illuminated when de-activated. **Damage to the awning can occur in high winds if the awning is left in the open position with this feature de-activated**.

Important: Do not attach or hang any objects from the awning or tie the awning down. If the sensor is activated or the retract button is depressed and the awning rolls up, damage to the awning and attached objects can occur.

To activate the wind sensor, simultaneously press and hold buttons 1 & 2 for 3 seconds.
To de-activate the wind sensor simultaneously press and hold buttons 3 & 4 for 3 seconds.

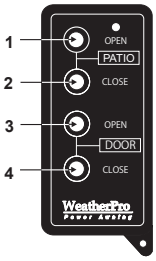

The wind sensor is specifically designed to allow air to pass across sensor probe.

Obstructions in the proximity of the wind sensor can diminish the sensitivity. If wind sensor is de-activated and damage to awning occurs, the awning warranty will be void.

Important: The wind sensor will only function correctly if the airway to the sensing probe is clear. Keep airway clear of dust, insects, ice, snow, or other debris. The sensing probe can be cleaned with a mild soap solution and a small soft bristle brush.

There are six (6) LED's in the WeatherPro control and one (1) button for selecting the wind speed.

A. 12 VDC Power Indicator/Fault Indicator (ON)
B. Wind Speed Setting
   1. The LED that is yellow indicates the wind speed currently selected.
C. Wind Speed Selection Button
   1. Wind speed is preset from the factory at 18 MPH.
   2. The wind speed can be adjusted by pressing the wind speed selection button. To increase or decrease the sensor sensitivity, press and release the wind speed selection button until the desired wind speed LED is lit. The recommended setting is 18 MPH.

Note: Awning is not intended for cold weather operation. Awning will automatically close when the wind sensor detects temperatures below 32° F.

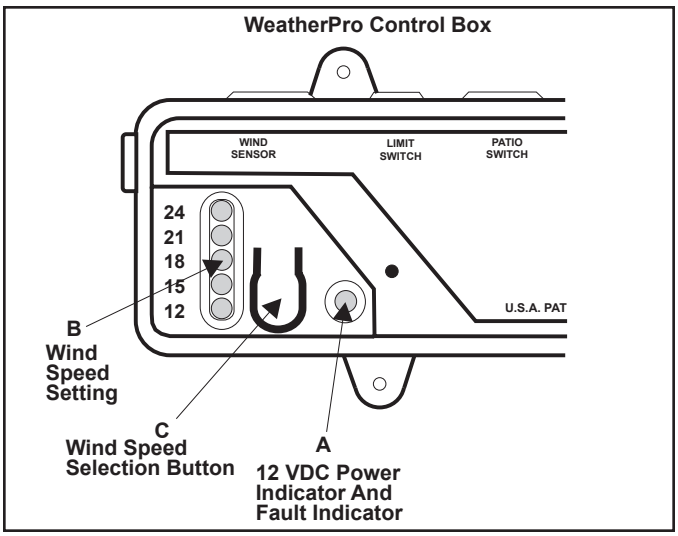

Adjust Pitch/Auto-Water-Shed Feature:

A. To Adjust The Awning Pitch:

1. With awning fully extended, loosen knob on bottom arm.

CAUTION

Pinch Hazard. When adjusting awning pitch, bottom arm will telescope. Keep hands and objects clear of openings around bottom arm. Failure to heed this warning could cause personal injury.

2. Pull top arm down to lower roller tube to desired height.
3. While holding top arm in place, tighten knob to set pitch.
4. Repeat for hardware on other side.

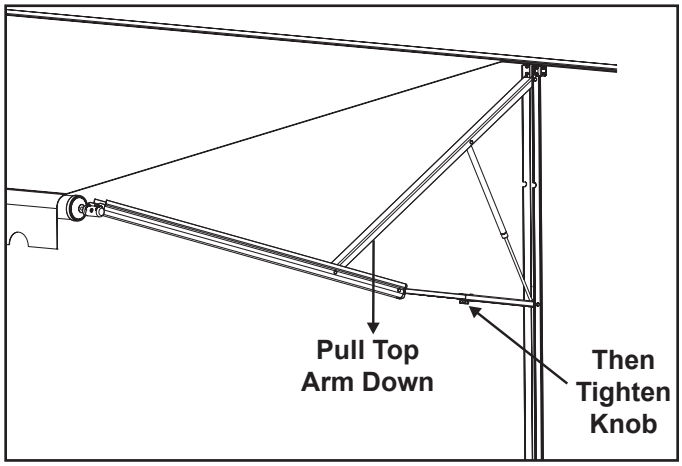

Important: To ensure rain water will run off awning, ensure that one end of the awning is lower than the other end. This will reduce the potential for water pooling in the center of the awning. See figure below.

5. Prior to closing awning, loosen knob to allow awning to reset to original position. Lightly tighten knob to reduce potential for sounds of rattling during travel.

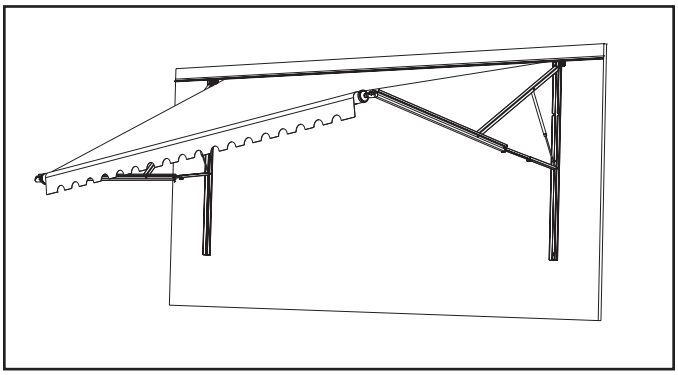

CAUTION

The WeatherPro awning is extremely durable and can be operated during light rain and light wind conditions. However, when periods of heavy rain, or wind is expected; or you leave the awning unattended the awning must be closed. Damage caused by wind and rain is not covered by warranty.

B. To Enable Auto-Water-Shed While Fully Extended:

1. With awning fully extended at normal pitch, loosen knob on rear hardware (left hand) while keeping front hardware knob tight. This will allow the rear hardware arm to automatically lower the height of the awning approximately 9 inches to allow water to run off. When there is no longer the need to shed water it will return to the normal pitch.

To Close Awning:

⚠ CAUTION

Pinch Hazard. When closing awning, bottom arm will fold down and against back channel. This area must be kept clear of people and objects. Failure to heed this warning could cause severe personal injury and/or property damage.

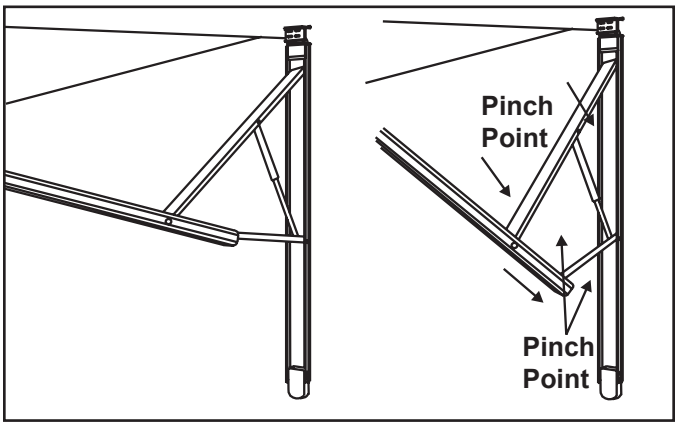

A. Ensure Knobs Have Been Loosened.
B. Using The Remote Control (Key FOB).
   1. Press and hold the "Retract" button for 3 seconds and the awning will automatically close. If not held for three seconds the awning will remain in the position when button is released and continue to close when pressed again.

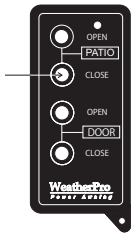

C Using The Remote Rocker Switch.
   1. Press and hold the "Retract" button for 3 seconds and the awning will automatically close. If not held for three seconds the awning will remain in the position when button is released and continue to close when pressed again.

Note: To stop awning during automatic closing operation, (remote control) simply press and release any key FOB button or the Remote Rocker Switch. Awning will stop in the position when button was pressed. To resume "CLOSE" operation, press the "CLOSE" button once again. When using the Remote Rocker Switch follow the same sequence.

Important: This will not work if awning is closing due to a fault.

Important: As an extra safety precaution, visually verify that the awning is fully closed.

Replacing Internal Control Box Fuse:

Important: If the awning does not respond to the key FOB or the wall switch, locate the control box and verify that at least the "ON" LED (and possibly a wind speed setting indicator LED) is on. If all LEDs are off verify adequate voltage at control box. Check internal fuse and replace if necessary. See below for replacement instructions.

A. If the control box is not operational (all LEDs on the front of the control box are off) even after adequate voltage supply has been verified, the internal fuse may have blown during installation and may need to be replaced.
   1. Disconnect 12V/Ignition harness from control box.
   2. Remove control box front cover. Use a flat screw driver to gently pry the three tabs on the edge of the cover past the corresponding snaps on the control box base. Be careful not to break the tabs. Gently pull the cover straight off the base. Alternately, you may remove the screws holding the control box to the wall and un-snap the tabs from behind.
   3. Locate the fuse. Gently pull the fuse from the mounting clips and inspect for damage. If it is necessary to replace the fuse, make sure to replace it with a new part that conforms to the following specification:
      0.5A, 250V, Fast Acting Fuse,
      5mm X 20mm Glass Tube
      (Reference Cooper-Bussmann
      GMA-500mA or equivalent)

      You may order replacement fuses from Dometic under the follwing kit numbers:
      3312252.004 (single fuse)
      3312253.002 (20-pak)

   4. Replace control box cover. Connect 12V/Ignition harness to control box. Verify awning is operational.

Important: If the control box continues to blow fuses when power is restored, this is an indication of a short or some other fault in the electrical circuit. Contact a Dometic Service Center or a qualified service technician for help.

In Case of Awning Power Failure Or To Manually Close Awning:

If the awning does not respond to the key FOB or wall switch, and at least the "ON" LED is on (see previous section), verify all harness connections and visually check for damaged wires. Make sure to refer to the trouble-shooting table at the end of this guide. If assistance from a Dometic Service Center or Qualified technician is required, you must manually roll up the awning before operating your vehicle.

Important: Never operate your vehicle while the awning is extended. Follow the procedure below to manually roll up and secure the awning.

Important: This procedure will require two people. When this procedure has been performed, the awning must be serviced by a Dometic Service Center or a qualified service technician before using again.

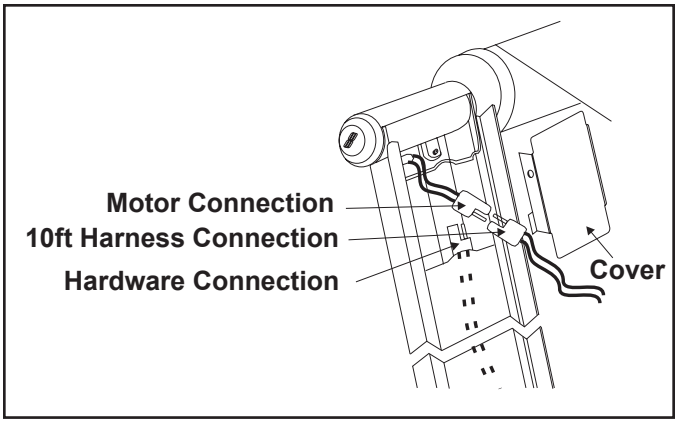

There are two methods of rolling up the awning if it appears there is no power to the awning motor. The following method should be performed first:

A. When the WeatherPro hardware is in the open position and the 12 VDC power has been lost the awning can be closed by supplying auxiliary power to the hardware. Connect the awning motor to an external 12 VDC power source via user-supplied wire (16 gauge minimum). A good external 12 VDC power source would be an automobile battery.
   1. Locate and unplug the motor and hardware cable connection located in the upper part of the right hand arm.
   2. Connect the user-supplied wire leads to the terminals in the connector from the motor. Electrical tape may be required to keep the wire leads in place. (Do not connect to the one in the hardware.)
   3. Connect the other end to a 12 VDC battery source. The red wire goes to + and the black to –. If there is not a problem with the awning motor, this will retract the awning. To avoid motor damage disconnect battery source immediately after awning is fully retracted.
   4. The awning can be extended by reversing the polarity. Place the red wire on the –and the black wire on the +. Again, remove wires immediately after awning is fully extended.

B. If the awning will not retract after performing the steps listed above, perform the following steps:
   1. Slide the pull strap (provided) into the utility slot of the FRTA.
   2. While one person is holding onto the pull strap, remove the screw in the top of the right side top casting. The FRTA will immediately roll in once the bolt is removed. Walk the awning to the closed position.
   3. Align hole where screw was removed and replace screw into top casting to secure awning. Awning should be tied to prevent opening until it can be serviced by a Dometic Service Center.

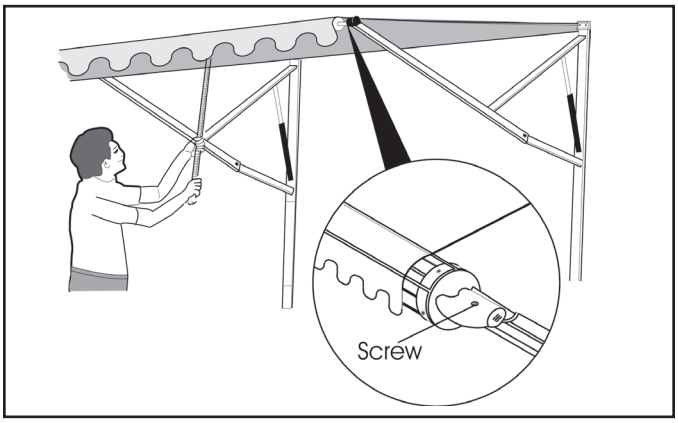

⚠ CAUTION

Screw must be re-installed to prevent awning from opening during travel. Have awning serviced by a Dometic Service Center or a qualified service technician before attempting to open awning after this procedure has been performed.

WeatherPro Helpful Hints:

- Whenever the awning is wet while rolled up, soon as conditions allow, roll it out and let it dry before rolling it up again. This will help prevent the formation of mildew and add greatly to the life of the awning.
- Mildew does not form on the fabric itself, but on the accumulated dust, dirt and grime. Periodically clean vinyl or woven acrylic fabric using a mixture of 1/4 cup of dish soap and 1/4 cup of bleach mixed with 5 gallons of warm water. Liberally slosh the mixture on the top of the fabric and roll the awning up for 5 minutes. This will apply the mixture to the bottom of the fabric as well. Roll it back out and hose off with fresh water. Repeat if necessary. Allow to dry before rolling up.
- Always make sure the awning is fully extended before opening the entry door.

When To Get More Help:

This User's Guide is intended to provide practical instruction for the sequential operation of the WeatherPro Patio Awning. If malfunctions occur that cannot be corrected by reviewing this Guide, contact a Dometic Service Center or a qualified service technician for assistance.

WeatherPro Awning Control - Diagnostics Guide

	Wind Speed LEDs	"ON" LED	Meaning	Reaction by Control	Reaction by User
1	SELECTED WIND SPEED ON	ON	• Proper voltage is detected at Control and Wind Sensor is enabled	• Normal operation of control.	• No user reaction required.
2	ALL LEDs OFF	ON	• Wind Sensor has been disabled with the Key FOB	• Control will retract the awning after 5 seconds, if the awning is extended when wind sensing is disabled.. • Control disables the "normal" extension routines for awning	• User can extend awning by pressing and holding the extend button. Awning will extend for approximately 4 seconds and stop. User can repeat as necessary to obtain full extension. • User should re-enable the Wind Sensor whenever possible
3	SELECTED WIND SPEED BLINKING	ON	• Wind Sensor has been activated by wind	• Control retracts awning if awning is extended. • Control monitors for sensor activation during retraction and at awning closure to determine if activation continues after awning closure. • Control will reset after awning closure, if sensor activation is no longer detected.	• User should observe wind conditions before attempting to extend the awning after any automatic closure. • User can extend awning as normal (after control resets) • User should use caution if they choose to disable the wind sensor with wind present. Disabling the sensor is not recommended here.
4	LEDs SEQUENCE ON, THEN OFF FROM TOP DOWN	ON	• Wet Sensor	• Control retracts awning if awning is extended. • Control monitors for sensor activation during retraction and after awning closure to confirm Wet Sensor condition exists. • Control disables the wind sensor. • Control disables the "normal" extension routines for awning • Control will automatically re-enable wind sensor when it determines the sensor is no longer activated (no longer wet) • If sensor activation condition is observed for longer than 12 hours, and awning is extended, then control will retract awning.	• User should observe wind conditions before attempting to extend the awning after any automatic closure. • User can extend awning by pressing and holding the extend button. Awning will extend for approximately 4 seconds and stop. User can repeat as necessary to obtain full extension. • User should re-enable the Wind Sensor whenever possible
5	SELECTED WIND SPEED BLINKING (alternating)	BLINKING (alternating)	• Sensor fault/ Communication issue between the Wind Sensor and the Control Box.	• Control retracts awning after 5 seconds if awning is extended when communication issue is detected. • Control disables extension of the awning by the user while the wind sensor is enabled • Control will reset if communication is re-established.	• User should observe wind conditions before attempting to extend the awning after any automatic closure. • User can disable wind sensor with Key FOB to extend awning.
6	BOTTOM TWO LEDs BLINKING	ON	• Wind Sensor is detecting temperatures below 32° F	• Control retracts awning if awning is extended when low temperature is detected. • Control disallows any extension of the awning until temperature goes above 32° F.	• User should observe temperature before attempting to extend awning again. • User can disable wind sensor with Key FOB to extend awning.
7	OFF	BLINK	• Power detected by control is less than 10.5 VDC (tolerance is +.5 VDC and -0.0 VDC)	• Control retracts awning if awning is extended when low voltage situation is detected. • Control disallows any extension of the awning until proper voltage is detected.	• User will not be able to extend awning. • Check voltage at house battery gauge or other gauge as necessary to confirm low voltage condition. • If voltage is low, then start coach engine to charge batteries. • User should contact service center if low battery condition reoccurs.
8	OFF	OFF	• No Power	• No reaction by control • Awning(s) cannot be operated	• Suggest user to contact service center. • Check voltage source at control, correct as necessary • Check internal fuse at control box. Replace if necessary.