DOMETIC

GRAVITY DISCHARGE TOILET OWNER'S MANUAL

Dometic 712-TM09 Toilet

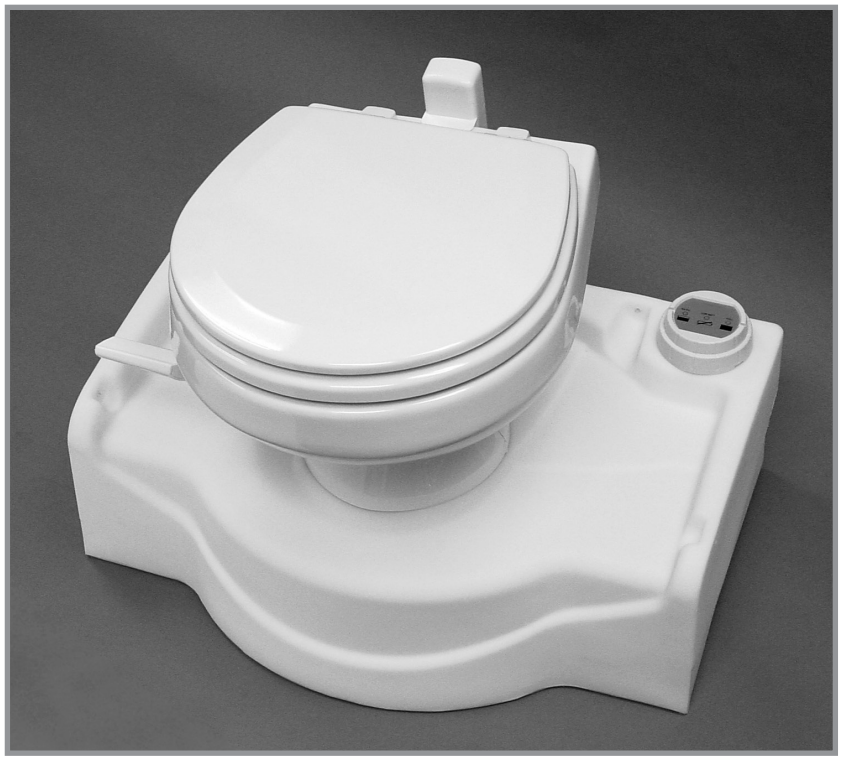

Table of Contents

Specifications 2
Installation . . . . . 2 - 4
Toilet Operating Instructions 4
Toilet Maintenance. 4
Preparing for Summer Use 4
Model Identification 4
Spare Parts 4
Tank Level Indicator Instructions 5
Troubleshooting . . . . . 5 - 6
Ordering Parts 7
Customer Service 7
Deodorants and Special Tissue 7
Warranty 8

WARNING

This manual must be read and understood before adjustment, maintenance, or service is performed. Modification of this product can result in property damage.

SPECIFICATIONS

Product Name: 712-TM09 Dometic Toilet

System:

Average water consumption per flush . 1 qt. (.95 L)

Minimum water consumption per flush. 1 pt. (.47 L)

Holding tank capacity . . . . . .9 gal. (34.1 L)

Water supply pressure . 5-80 PSI (.35-5.62 Kg/cm^2)

Water inlet size . . . . . 1/2" (13 mm) NPT

Holding tank discharge fitting . . . .3" (76 mm) spigot

Vent fitting. . . . . for 1-1/2" (38 mm) ID PVC pipe

Unit weight . . . . . 41 lbs. (19 Kg)

Dimensions:

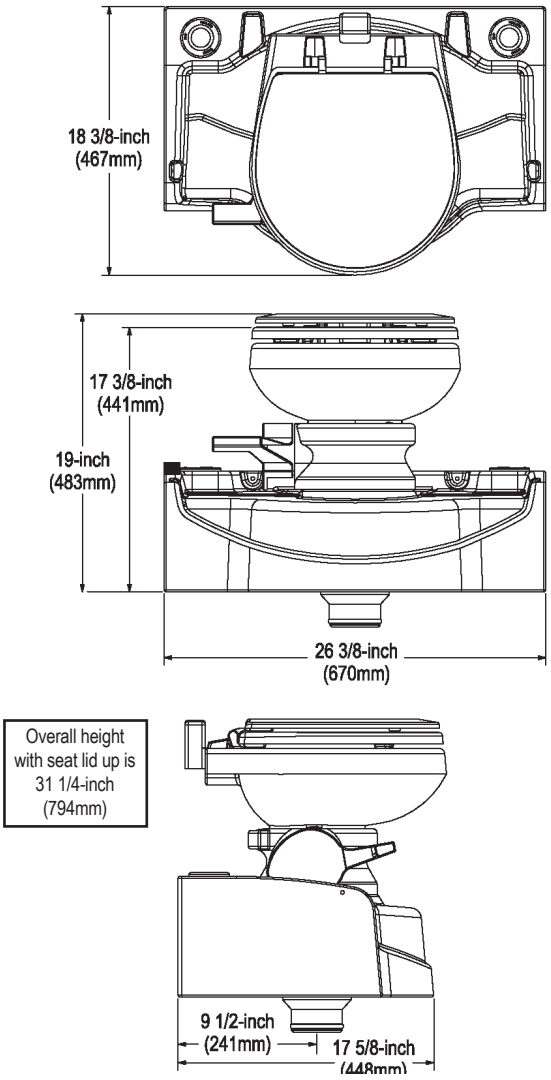

All dimensions +/-3/8-inch (10mm)

INSTALLATION INSTRUCTIONS

Tank:

1. Select position in bathroom where unit can be installed in socket fitting and operate properly. Allow room for using the flush lever and clearance for raising the seat and lid.

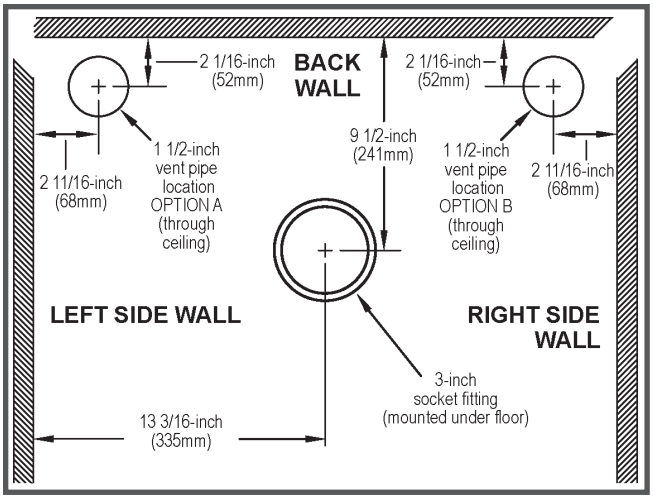

2. Position the tank against three walls. Mark four holes at mounts on tank base. After holes are marked, remove tank, and drill pilot holes. Slide tank back into position. Secure the tank with four screws and washers on all tank mounts.

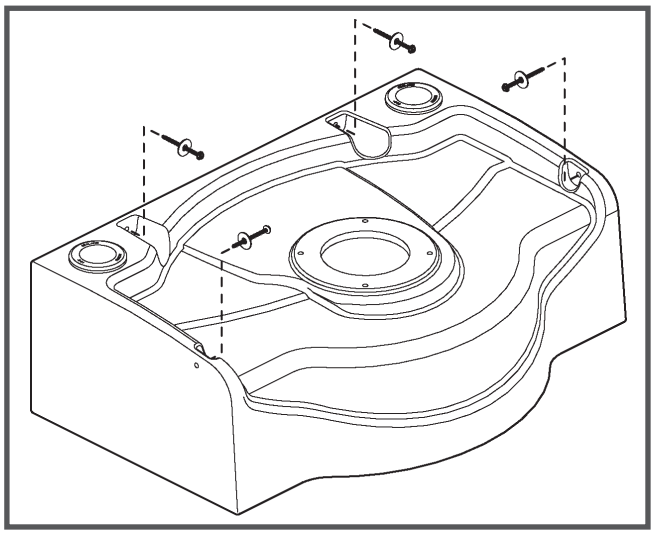

3. Insert 1-1/2 inch (38mm) I.D. PVC vent pipe into a rubber sealing grommet in either corner of the tank, no more than 1/2 inch (13mm) into tank. Be sure to plumb vent pipe correctly to desired outside location.

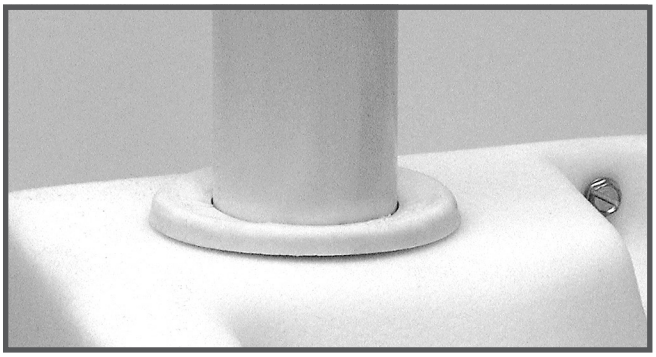

Toilet Installation:

4. Remove plastic pedestal cover from toilet base.
5. Install the (4) 1/4-20 x 1-3/4" long studs in inserts on the tank top.

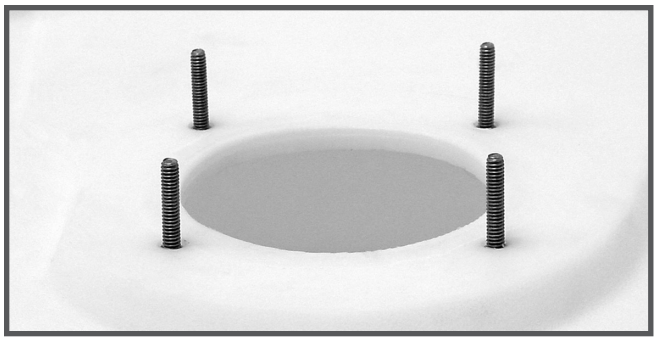

6. Place floor flange seal on studs, aligning the studs with bumps on seat. Note: "THIS SIDE UP" should face upwards.

7. Place toilet on studs and secure with four washers and four nuts. There should be no gap between the bottom of the toilet base and the top of the tank.

Water line:

8. Locate water valve at rear of flush lever.
9. Attach water supply line from water system to inlet fitting on back of water valve.

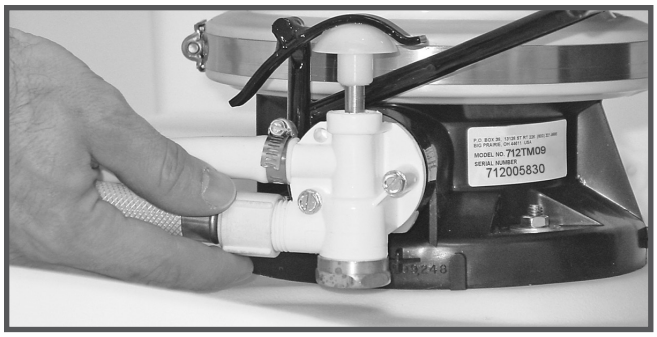

Flush pedal cover:

10. Place outer pedal cover over metal lever. Push pedal down, and secure inner pedal cover to outer cover with supplied fasteners.

Pedestal cover:

11. Slide back side of pedestal cover around rear of toilet base and snap in groove. Close front half of pedestal cover and snap in groove.

INSTALLATION INSTRUCTIONS (cont'd)

Tank Level Indicator:

12. Lubricate inside surface of rubber sealing grommet and outside surface of probe body with liquid dish-washing detergent. Insert level indicator into rubber sealing grommet.

TOILET OPERATING INSTRUCTIONS

To properly use the Dometic toilet, follow these simple instructions:

1. Use biodegradable tissue such as Dometic brand.
2. To add water to the toilet before using, lift or raise the flush pedal.
3. To flush toilet, push pedal all the way down until sewage leaves the toilet bowl. Water flow pressures vary at different locations and therefore, holding the flush lever down 4-8 seconds may be required. A flow of 2-4 GPM (8-15 Lpm) is recommended for proper rim and bowl wash.
4. Allow flush pedal to snap back, which permits positive sealing around the flush ball.
5. A small amount of water should remain in the bowl.

Note: Holding the flush pedal down longer than necessary results in excessive water usage.

CAUTION: Do not dispose of sanitary napkins or other non-dissolving items in the toilet.

TOILET MAINTENANCE

CLEANING

The Dometic toilet should be cleaned regularly for maximum sanitation and operational efficiency.

Clean the toilet bowl with a mild bathroom cleaner, such as Dometic Toilet Bowl Cleaner. Do not use chlorine or alcohol-based caustic chemicals such as drain opening types, as they will damage the seals.

If an odor is apparent from the toilet:

1. Clean out system by flushing several gallons of fresh water through with one cup of liquid laundry soap.
2. Add odor control deodorant in amount specified for your holding tank capacity after cleaning and every few days during use.

WINTERIZING

At the end of each season, the Dometic toilet should be winterized for storage by either draining or using potable water-safe antifreeze in the system.

To drain:

1. Thoroughly flush system with fresh water.
2. Empty holding tank.
3. Shut off water supply to toilet. Disconnect water line.
4. Press pedal until all water is drained from toilet.

To use antifreeze:

1. Thoroughly flush system with fresh water.
2. Empty holding tank.
3. Drain potable water tank.
4. Add freshwater antifreeze and water mixture through toilet and into the waste holding tank. Each installation is different, so amounts may vary. User discretion is required to assure adequate protection.
5. Empty holding tank.

Note: Use nontoxic antifreeze designated for potable water systems.

CAUTION: Never use automotive-type antifreeze in freshwater systems.

PREPARING FOR SUMMER USE

To prepare the Dometic toilet for summer use, turn on water supply and check system for leaks. Flush toilet, check for leaks and repair as necessary. Your Dometic toilet is now ready for use.

MODEL IDENTIFICATION

The model identification label is located on the toilet base under the pedestal cover.

P.O. BOX 38, 13128 STATE RT 226 (800) 321-9886
BIG PRAIRIE, OH 44611 USA

MODEL NO. 000

SERIAL NUMBER
000000

SPARE PARTS

Your Dometic 712-TM09 toilet is designed for years of dependable trouble-free service. However, during the life of the product, certain parts may require replacement. The following is a list of parts kits which may be required for maintenance purposes.

Part Number	Description
385318162	Ball, Shaft & Cartridge Kit
385310677	Seal Kit
385314349	Water Valve Kit
385316906	Vacuum Breaker Kit

TANK LEVEL INDICATOR INSTRUCTIONS

Operation

1. Twist white cap counterclockwise until it stops (A). Lift off cap.
2. Slide switch from OFF to TEST to assure fresh batteries and proper operation. In TEST mode, the “3/4 FULL” (left) and “FULL” (right) lights should illuminate. The “LOW BATT” (center) light will not illuminate. Slide switch to ON for operation. The level indicator can be turned off if the toilet will not be used for an extended time.
3. Replace white cap.

Indicator Lights

When the holding tank level reaches about 3/4 full, the yellow “3/4 FULL” light illuminates.

When the holding tank is full, the red “FULL” light illuminates.

The holding tank should be emptied before the toilet is used again. *If the holding tank fills up and the indicator lights do not glow, the probe ends may need to be cleaned. See CLEANING PROBES.*

When emptying the tank, the indicator lights may remain lit until after the effluent drains from the sensing probes. *If the lights continue to remain lit after a few minutes, the probe ends may need to be cleaned. See CLEANING PROBES.*

Cleaning Probes

1. To remove probes from holding tank, twist off white cap and set aside.
2. Twist and pull black probe body up to remove it from rubber grommet. After cleaning probes, be sure to put probe back into rubber grommet with the word “TOP” toward back of tank.

Batteries

When the batteries become weak, the red “LOW BATT” light will illuminate. Replace with AA **alkaline** batteries, making sure to position new batteries as shown.

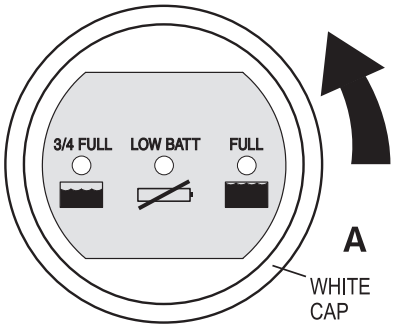

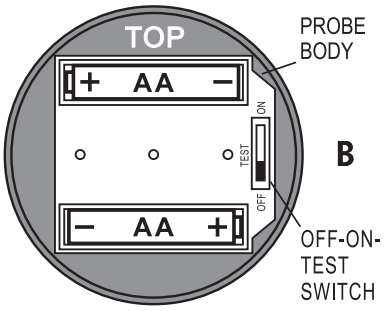

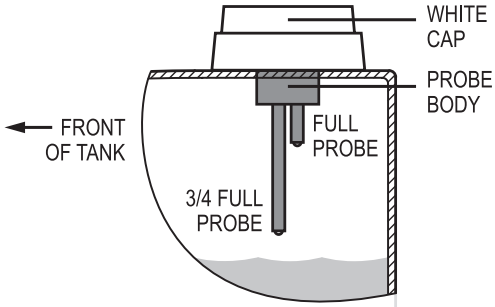

TROUBLESHOOTING

TOILET BASE ASSEMBLY

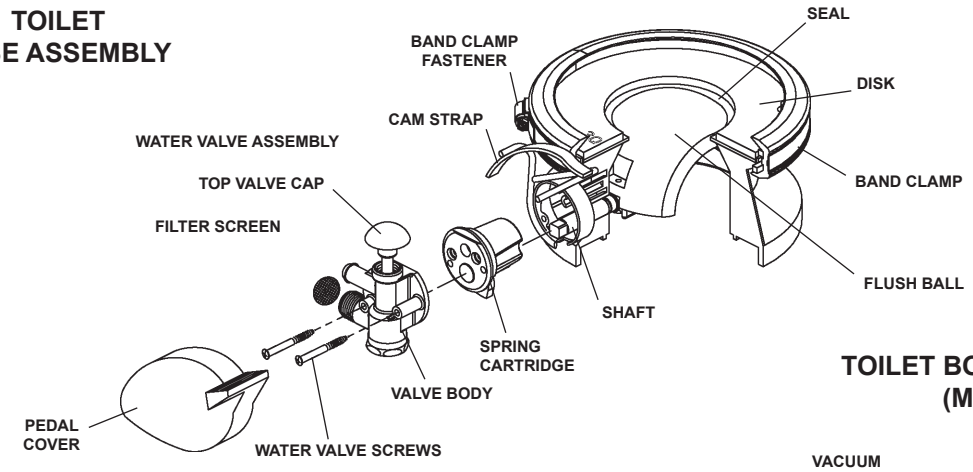

TOILET BOWL, REAR VIEW (Model 712)

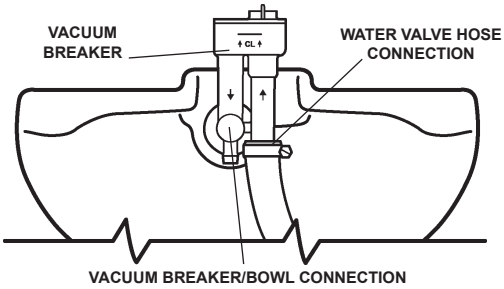

TROUBLESHOOTING (cont'd)

Problem	Possible Cause	Service Instructions
1. Odor when flush ball is open.	a. Odor emitting from holding tank.	a. Use Dometic holding tank deodorant.
2. Water will not stay in bowl.	a. Loose band clamp. b. Improper seal between flush ball and seal due to dirt or debris. c. Worn or damaged seal. d. Worn or damaged flush ball.	a. Tighten band clamp fastener. b. Clean between flush ball and seal. c. Replace seal. d. Replace flush ball.
3. Flush ball will not close completely.	a. Too much friction between flush ball and seal. b. Water valve screws are too tight. c. Flush pedal does not snap back into original position.	a. Lubricate flush ball with spray lubricant (e.g. spray silicone, furniture polish). b. Loosen screws slightly. c. Replace spring cartridge.
4. Flush ball will not open.	a. Shaft not fully engaged in the spring cartridge. b. Broken shaft. c. Worn or defective spring cartridge.	a. Put pressure on shaft from under the flush ball (pushing into spring cartridge) until it engages. You may have to rotate flush ball slightly until shaft lines up with square in spring cartridge. b. Replace with new ball, shaft & cartridge kit. c. Replace with new spring cartridge kit.
5. Water does not shut off in toilet (toilet overflows).	a. Not enough clearance between cam strap and top of water valve cap. b. Dirt lodged in lubricant between cam strap and top valve cap on water valve. c. Worn or defective water valve.	a. Adjust cam strap to have .02" - .06" (.5mm - 1.5mm) clearance with top of water valve cap. b. Remove water valve. Clean top cap and cam strap. Apply lubricant to top of cap. Re-install water valve. c. Replace water valve.
6. Water does not enter toilet bowl properly.	a. Water valve clogged. b. Insufficient water flow rate at toilet. c. Plugged rim wash holes in toilet.	a. Remove and clean screen located at inlet of water valve. b. Check water flow rate at toilet. Rate should be 2 gpm (7.6 lpm) at toilet. c. Clean holes. If still a problem, replace the toilet bowl.
7. Water leaks from water valve.	a. Water line connection is loose or not seated properly. b. Stripped threads on water valve. c. Water valve body cracked due to freeze damage. d. Defective water valve.	a. Insure that threads are not cross-threaded and tighten. b. Replace water valve. c. Replace water valve. d. Replace water valve.
8. Water leaks from bottom of toilet base.	a. Toilet is not secured to tank. b. Distorted or defective toilet mounting seal. c. Cracked toilet base.	a. Tighten toilet mounting bolts. No gap between toilet base and tank should remain. b. Replace seal between toilet base and tank. c. Replace toilet base assembly.
9. Water leaks from rear of toilet bowl.	a. Worn or defective vacuum breaker. b. Loose vacuum breaker. c. Cracked or defective toilet bowl.	a. Remove vacuum breaker cover. Flush toilet while watching vacuum breaker. If water leaks during flush, replace vacuum breaker. b. Secure vacuum breaker connection. If loose, push breaker into bowl. c. Replace toilet bowl.
10. Water leaks from the base/ toilet connection.	a. Band clamp may be loose.	a. Remove plastic base cover and tighten the band clamp.

ORDERING PARTS

Dometic is ready to assist you in the event service is required. Before calling, please have the following information available. Your cooperation in having this information ready is appreciated and allows us to better meet your needs.

1. Toilet Model Number
2. Serial Number
3. Part Number, Description and Quantity (see separate Parts List)

CUSTOMER SERVICE

There is a strong, worldwide network to assist in servicing and maintaining your sanitation system. For the Authorized Service Center near you, please call from 8:00 a.m. to 5:00 p.m. (ET) Monday through Friday.

Telephone: **1-800-321-9886** U.S.A. and Canada
330-496-3211 International

Fax: **330-496-3097** U.S.A. and Canada
330-496-3220 International

DEODORANTS AND SPECIAL TISSUE

Dometic toilets require the regular addition of a deodorant product to reduce holding tank malodors and to help break down holding tank contents. Several factors should be considered in selecting a deodorant product.

Liquid or Granulated: Liquid products obviously work more quickly by readily going into solution. Granulated powder formulations, on the other hand, have the advantage of requiring less storage space and are less likely to leak if the package is inadvertently damaged.

Formaldehyde versus Non-Formaldehyde: Dometic manufactures both types of deodorants. Generally speaking, formaldehyde formulas control odor very effectively at all temperatures and with all degrees of water hardness. Dometic® Environment-Friendly brand, which is formaldehyde free, is similarly effective.

How Much Deodorant and How to Add It: The deodorant is added directly into the toilet bowl, then flushed into the holding tank. Follow bottle or package instructions. Conditions of extremely warm weather, longer waste holding time and larger tank capacities may require more deodorant treatment. Also, to maintain optimum efficiency in odor control, the waste holding tank should be cleaned thoroughly at least once or more each season depending on use.

Why Not Use Household Toilet Paper in Your Dometic Toilet. Household tissues often contain adhesives which bond together the paper fibers from which the tissue is made. The adhesives prevent the tissue from breaking apart, and their use in “ultra-low flow” systems can cause system clogging. Dometic tissue is especially designed for use in low water toilet systems. Its rapid dissolving properties minimize the amount of residual paper in the holding tank and allow deodorizers to work more efficiently.

Dometic Brand versus Other Brands: We constantly strive to provide our system owners with effective products that have minimal environmental impact and good value. Many deodorant products do not measure up to our standards of performance and value.

MANUFACTURER'S TWO-YEAR AND TEN-YEAR LIMITED WARRANTIES

Dometic Corporation warrants, to the original purchaser only, that this Dometic gravity discharge toilet, if used for personal, family or household-like purposes, is free from defects in material and workmanship for a period of two (2) years from the date of purchase.

Dometic also warrants, to the original purchaser only, that the ceramic portion of the toilet bowl will not discolor, stain, scratch or craze for a period of ten (10) years if used for personal, family or household-like purposes, and is regularly cleaned as described in the product's owner's manual.

If this Dometic product is placed in commercial or business use, it will be warranted, to the original purchaser only, to be free of defects in material and workmanship for a period of ninety (90) days from the date of purchase.

Dometic reserves the right to replace or repair any part of this product that proves, upon inspection by Dometic, to be defective in material or workmanship. All labor and transportation costs or charges incidental to warranty service are to be borne by the purchaser-user.

EXCLUSIONS

IN NO EVENT SHALL **DOMETIC** BE LIABLE FOR INCIDENTAL OR CONSEQUENTIAL DAMAGES, FOR DAMAGES RESULTING FROM IMPROPER INSTALLATION, OR FOR DAMAGES CAUSED BY NEGLECT, ABUSE, ALTERATION, OR USE OF UNAUTHORIZED COMPONENTS. THIS INCLUDES FAILURES WHICH MAY RESULT FROM NOT FOLLOWING THE WINTERIZATION OR CLEANING PROCEDURE AS DESCRIBED IN THIS OWNER'S MANUAL. ALL IMPLIED WARRANTIES, INCLUDING ANY IMPLIED WARRANTY OF MERCHANTABILITY OR FITNESS FOR ANY PARTICULAR PURPOSE, ARE LIMITED TO A PERIOD OF ONE (1) YEAR FROM DATE OF PURCHASE.

IMPLIED WARRANTIES

No person is authorized to change, add to, or create any warranty or obligation other than that set forth herein.

Implied warranties, including those of merchantability and fitness for a particular purpose, are limited to one (1) year from the date of purchase for products used for personal, family or household-like purposes, and ninety (90) days from the date of purchase for products placed in commercial or business use.

OTHER RIGHTS

Some states do not allow limitations on the duration of an implied warranty, and some states do not allow exclusions or limitations regarding incidental or consequential damages; so, the above limitations may not apply to you. This warranty gives you specific legal rights, and you may have other rights which vary from state to state.

To obtain warranty service, first contact your local dealer from whom you purchased this product.

Dometic is a customer driven, world-leading provider of innovative leisure products for the caravan, motorhome and marine markets. Dometic offers a complete range of air conditioners, refrigerators, awnings, cookers, sanitation systems, lighting, windows, doors and other equipment that makes leisure life more comfortable away from home.

Dometic also provides refrigerators for specific use in hotel rooms, offices and for storage of medical products and wine. Dometic's products are sold in almost 100 countries and are produced mainly in Dometic's own production facilities around the world. Dometic has more than 4,400 employees.

DOMETIC

Dometic Corporation, Sanitation Division
13128 State Rt. 226, P.O. Box 38
Big Prairie, OH 44611 USA
1-800-321-9886 • Fax: 330-496-3097
www.Dometic.com

REVISION A
Form No. 600345228 9/17
©2017 Dometic Corporation