DOMETIC

SANITATION TOILETS

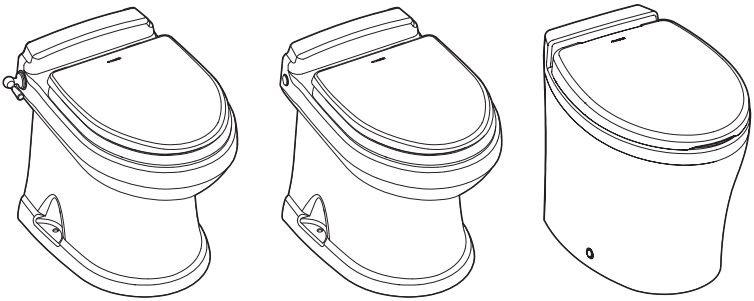

9300/9400/9500

EN

9000 Series

Operation Manual

NORTH AMERICAN ADDRESS INFORMATION

U.S.A. & CANADA
Service Office
Dometic Corporation
13128 St. Rte. 226
Big Prairie, OH 44611

Service Center & Dealer Locations
Refer to "7 Customer Service" on page 10.

Form No. 600347474 06/18 | ©2018 Dometic Corporation

Read these instructions carefully. These instructions MUST stay with this product.

CONTENTS

1 Explanation of symbols and safety instructions. 3
2 Intended use 4
3 Operation. 5
4 Maintenance 7
5 Troubleshooting. 9
6 Disposal 11
7 Customer Service. 12
8 Limited warranty. 12

1 EXPLANATION OF SYMBOLS AND SAFETY INSTRUCTIONS

This manual has safety information and instructions to help you eliminate or reduce the risk of accidents and injuries.

1.1 Recognize safety information

This is the safety alert symbol. It is used to alert you to potential physical injury hazards. Obey all safety messages that follow this symbol to avoid possible injury or death.

1.2 Understand signal words

A signal word will identify safety messages and property damage messages, and will indicate the degree or level of hazard seriousness.

WARNING indicates a hazardous situation that, if **not** avoided, could result in death or serious injury.

CAUTION indicates a hazardous situation that, if **not** avoided, could result in minor or moderate injury.

NOTICE is used to address practices **not** related to physical injury.

indicates additional information that is **not** related to physical injury.

1.3 Supplemental directives

Read and follow all safety information and instructions to avoid possible injury or death.
Read and understand these instructions before use and maintenance of this product.
Incorrect operation and maintenance of this product can lead to serious injury.
The installation must comply with all applicable local or national codes, including the latest edition of the following standards:

U.S.A.

- ANSI/NFPA70, National Electrical Code (NEC)
- ABYC guidelines for marine installations

1.4 General safety messages

WARNING Failure to obey the following warnings could result in property damage, serious injury, or death:

- This product must be installed and serviced by a qualified service technician.
- Do **not** modify this product in any way. Modification can be extremely hazardous.
- FLOOD HAZARD:
  - Before beginning work on this product, be sure that all electrical power to the unit has been turned off and that seacocks are in the closed or off position.
  - For toilets connected to any through-the-hull fittings: always close seacocks when the toilet is **not** in use (even if boat is unattended for a brief period).
  - Instruct all passengers on how to close valves when the toilet is **not** in use.
  - For toilets using fresh water for flushing, disconnect any shoreside water connections when the boat is unattended for any length of time.

NOTICE RISK OF PROPERTY DAMAGE: Failure to obey the following notices may cause damage to the toilet or toilet system.

- Only flush water, bodily wastes, and rapid-dissolving toilet tissue.
- Do **not** overfill the holding tank, or serious damage can occur to the sanitation system. Overfilling the holding tank can rupture the holding tank or release tank contents into the bilge.
- This toilet system is not intended for raw water flush toilet systems and is not designed to flush with seawater. Only use a fresh water supply.

2 INTENDED USE

The 9000 Series RushFlush toilets are designed and intended for use inside the boat for which it is supplied. RushFlush toilets are not intended for use with a raw water or seawater flush system. Use the instructions to ensure correct operation of the toilet. Dometic accepts no liability for damage in the following cases:

- Faulty assembly or connection.
- Damage to the product resulting from mechanical influences and excess voltage.
- Alterations to the product without expressed permission from the Dometic Corporation.
- Use for purposes other than those described in the operating manual.

Dometic Corporation reserves the right to modify appearances and specifications without notice.

3 OPERATION

3.1 Using the flush touchpad or flush switches

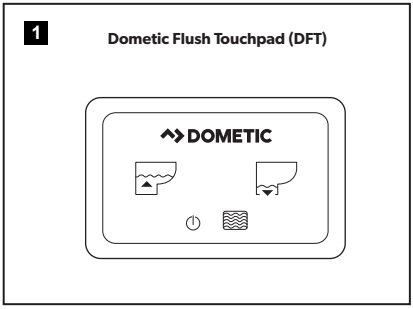

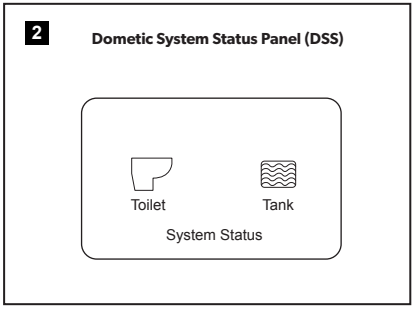

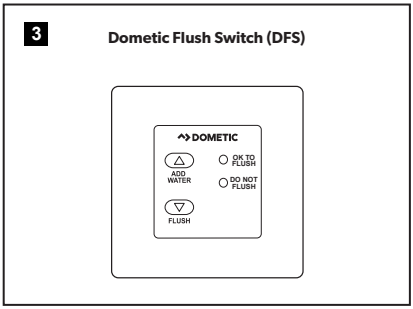

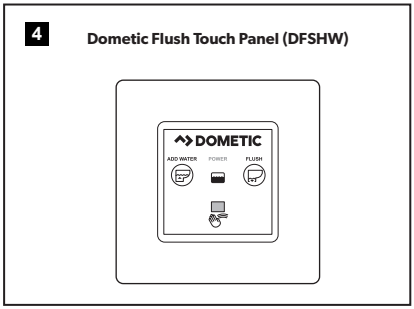

➤ Press and hold the **Add Water** switch to fill the bowl to the desired water level.

➤ Press the **Flush** switch, then release it to flush the toilet.

3.2 Using the flush handle (9300 models only)

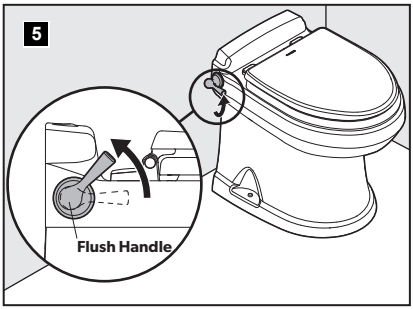

➤ Lift the flush handle to fill the bowl to the desired water level.

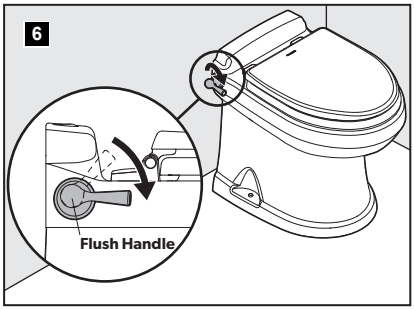

➤ Press the flush handle down, then release it to flush the toilet.

3.3 Understanding the indicator lights for the 9000 series

Indicator	Light	Status
Power on	Green	Electrical power to the toilet is activated
Tank level	Amber	The holding tank is 75% full
	Red	The holding tank is 100% full*

*Flush actuation is disabled to prevent overfilling of the holding tank.

3.4 Using the automatic "full tank" shut-down function

When connected to a holding tank level indication system, the RushFlush toilet system control module disables flush functionality when the holding tank level reaches the "full" mark.

➤ Empty the holding tank to restore flush functionality.

3.5 Adjusting the water consumption settings

To optimize toilet performance and operation, adjust the water control module to set the rate of water flow for the upper rim and lower bowl jet. This adjustment should occur during installation. Refer to the 9000 Series Installation Manual for more detail.

3.6 Initializing the toilet system

➤ Turn on the water supply and electrical power to the toilet.

➤ Press the **Flush** handle or switch once.

➤ Toss several sheets of toilet tissue into the bowl and flush the toilet again.

If the toilet does not function as expected, refer to "5 Troubleshooting" on page 9 for possible solutions.

4 MAINTENANCE

⚠ WARNING FLOOD HAZARD: Before beginning work on this product, be sure that all electrical power to the unit has been turned off and that seacocks are in the CLOSED or OFF position. Failure to obey this warning could result in property damage, serious injury, or death.

NOTICE RISK OF PROPERTY DAMAGE: Do **not** use abrasive cleaners, caustic chemicals, or lubricants and cleaners that contain alcohols or petroleum distillates. These substances may cause damage to the toilet's internal seals.

4.1 Cleaning the toilet

➤ Use non-abrasive cleaners. Follow the directions on the cleaner manufacturer's label for details on using the cleaner.

4.2 Setting an inspection schedule

Inspection schedule	Inspection task
Monthly	Inspect the toilet, plumbing, plumbing connections, wiring, and wiring connections.
	Open and close all of the plumbing valves, including the seacocks.
	Check the inline water filters and the vented loops for blockages.
Yearly	Check the water valve filter.

4.3 Preparing the toilet for an extended period of non-use

➤ Flush the toilet.

➤ Add four ounces (120 ml) of liquid biodegradable laundry detergent. The laundry detergent should **not** contain bleach or other environmentally harmful substances.

➤ Flush the toilet five times to clear the bowl.

➤ Turn off the water supply to the toilet.

➤ Turn off the power to the toilet.

➤ Pump out the holding tank completely.

➤ If the system will be subjected to freezing temperatures, proceed to "4.4 Winterizing the toilet" on page 8.

If the boat or RV will not be used for an extended period of time, or in the event of a long electrical power interruption, electrical power and water supply to the toilet should be shut off.

4.4 Winterizing the toilet

⚠WARNING RISK OF POISONING: Do **not** use an automotive-type antifreeze in fresh-water systems. Use a non-toxic antifreeze designed for potable water systems. Failure to comply could result in property damage, serious injury, or death.

The amount of antifreeze needed may vary, depending on the installation.

For pressurized fresh water systems

- ➤ Flush the system thoroughly with fresh water.
- ➤ Drain the potable water tank.
- ➤ Empty the holding tank.
- ➤ Add freshwater antifreeze to the potable water tank.
- ➤ Flush the potable-water and antifreeze mixture through the toilet and into the entire plumbing system. Each installation is different, so amounts may vary. User discretion is required to ensure adequate protection.
- ➤ Turn off the power to the toilet.
- ➤ Empty the holding tank of any remaining contents.

5 TROUBLESHOOTING

Fault	Possible cause	Suggested remedy
The flush function works, but the water in the bowl empties slowly or not at all.	The discharge pipe is pinched or kinked.	Check discharge piping.
	Discharge piping is not sloped correctly.	Reroute the discharge pipe. Minimum downward slope from toilet to waste tank is 1/8" (3 mm) per foot.
	Discharge piping is blocked	Close the seacocks and clear the blockage.
	Check valve in the discharge line is blocked.	Clear blockage or replace check valve.
	Water system pressure is too low.	Clear blockage at water valve inlet or adjust water system pressure switch.
	Holding tank is not venting properly.	Check vent line for blockage and repair.
	The water flow to the rim or lower water jets is too low.	Increase the flow of the water jets at the water flow control module.
Flush cycle does not start after pressing flush handle or switch.	Holding tank is full and electrical power to toilet is shut off (when installed with full-tank shutdown option).	Empty the waste holding tank.
	Electrical power to toilet is disrupted.	Check wiring, circuit breakers.
	Flush switch is malfunctioning.	Replace flush switch.
	Water flow control module is malfunctioning.	Replace control module.
Toilet flushes continuously, or bowl fills with water when not in flush cycle.	Jet valve diaphragm or pilot hole is clogged with debris.	Inspect/clean water system strainers. Disassemble water valve(s) and clean diaphragm or pilot hole.
	Water flow control module is malfunctioning.	Replace control module.

Fault	Possible cause	Suggested remedy
Insufficient or no water enters the toilet bowl (upper rim and/or lower bowl jets).	Water supply line (to upper rim or lower bowl jets) is pinched or kinked.	Check water supply lines.
	Screen in water valve(s) is blocked.	Clear blockage.
	Intake water filters are blocked.	Clear water filters.
	Maintenance valve in lower bowl water supply line is closed.	Open maintenance valve.
	Water system is not pressurized.	Check for closed valves or leaks.
	Water valve (to upper rim or lower bowl jets) is malfunctioning.	Inspect/clean water system strainers. Disassemble water valve(s) and clean diaphragm or pilot hole.
	Debris is lodged in water jet.	Clear blockage.
	Water flow control module is malfunctioning.	Replace control module.
Water pump cycles very frequently. (Problem is in pressurized water system.)	Leak in water system.	Find leak and repair.
	Pressure switch not adjusted correctly.	Adjust setting to 30-50 PSI.
	Water pump inlet check valve is clogged or stuck open.	Clean and/or replace check valve.
	Water pressure tank air pressure is too high.	Adjust air pressure 3-5 PSI below pump activation pressure.
	Water pressure tank bladder is ruptured.	Replace water pressure tank.

6 DISPOSAL

Place the packaging material in the appropriate recycling waste bins, whenever possible. Consult a local recycling center or specialized dealer for details about how to dispose of the product in accordance with all applicable national and local regulations.

7 CUSTOMER SERVICE

For the Authorized Service Center near you, call between 8:00 a.m. and 5:00 p.m. (ET), Monday through Friday, or contact the nearest Parts Distributor.

Telephone:	1 800-321-9886	U.S.A. and Canada
	330-439-5550	International
Fax:	330-496-3097	U.S.A. and Canada
	330-439-5567	International
Website:	www.dometic.com	

8 LIMITED WARRANTY

LIMITED WARRANTY AVAILABLE AT: dometic.com/warranty.

IF YOU HAVE QUESTIONS, OR TO OBTAIN A COPY OF THE LIMITED WARRANTY FREE OF CHARGE, CONTACT:

DOMETIC CORPORATION
SANITATION CUSTOMER SUPPORT CENTER
13128 STATE ROUTE 226
BIG PRAIRIE, OHIO, USA 44611
+1 800-321-9886