DOMETIC

REFRIGERATION
MINI FRIDGES

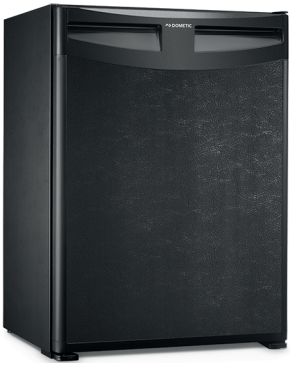

CL440LDC, CL440LGC, CL460LDC, CL460LGC

EN

Minibar

Installation and Operating Manual

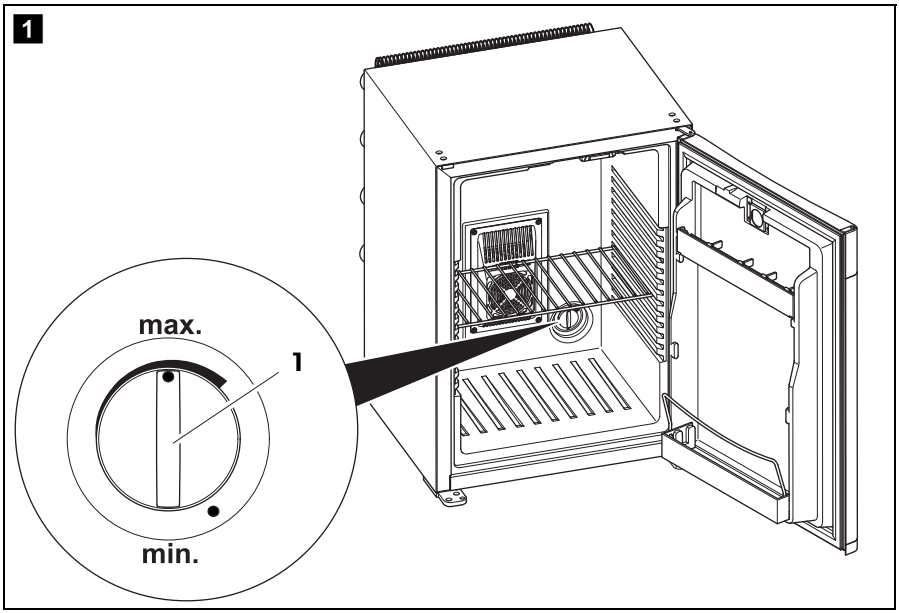
1
max.
1
min.

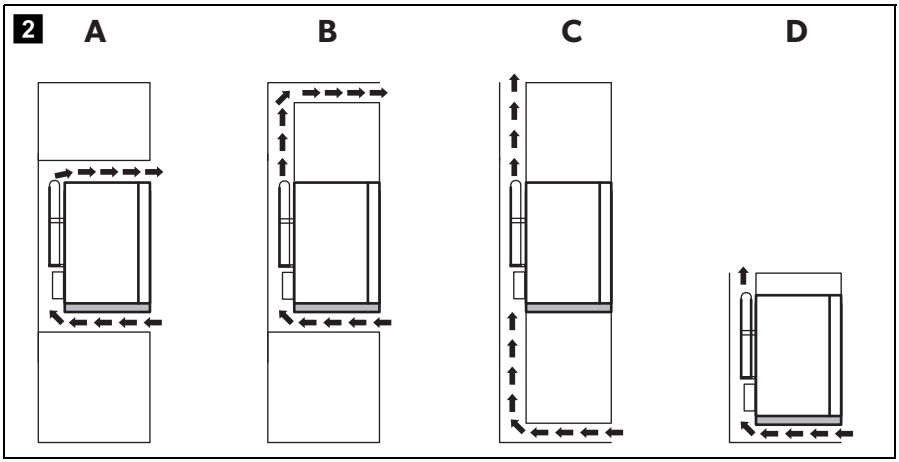
2
A
B
C
D

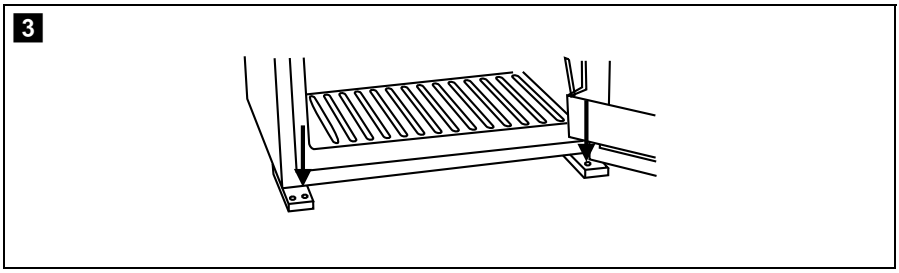
3

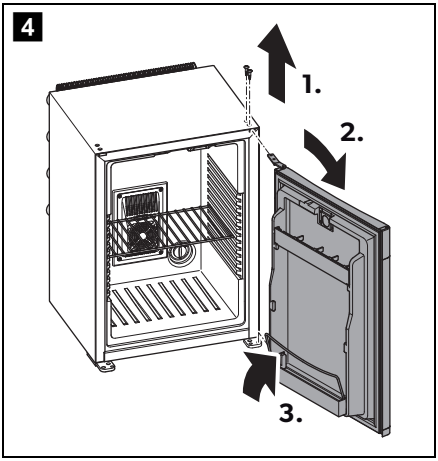
4
1.
2.
3.

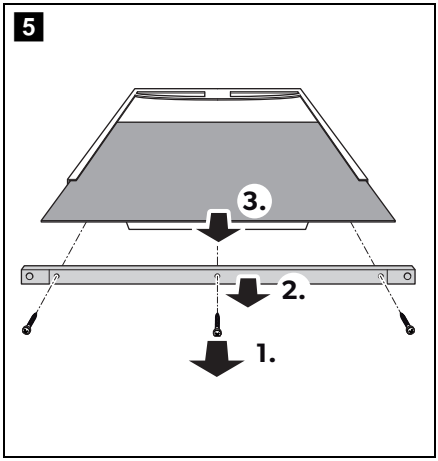
5
3.
2.
1.

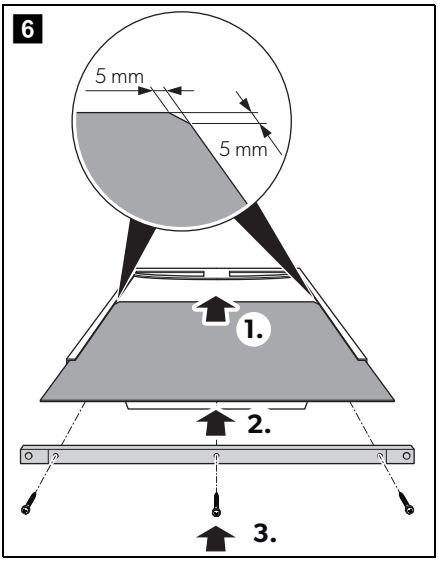
6
5 mm
5 mm
1.
2.
3.

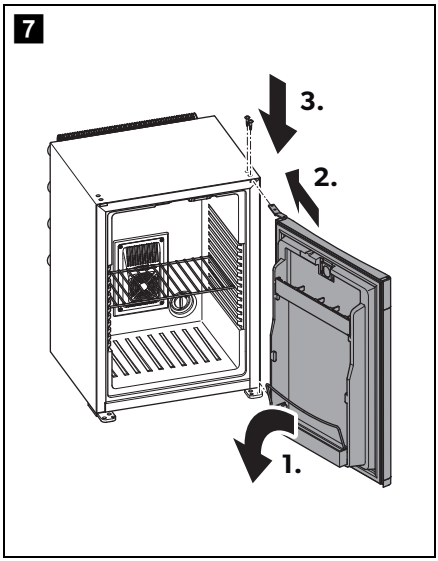
7
3.
2.
1.

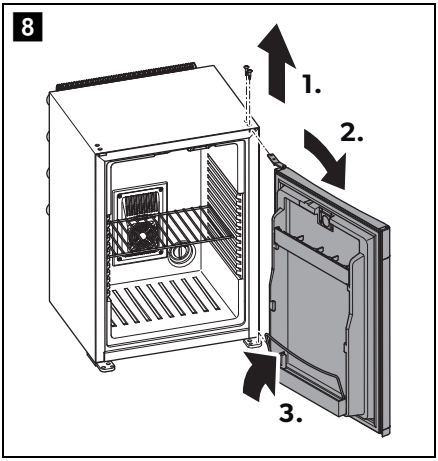
8
1.
2.
3.

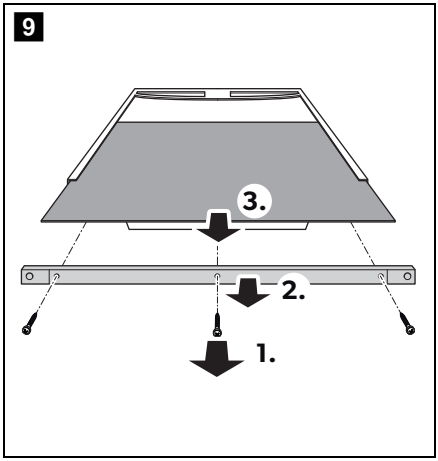
9
3.
2.
1.

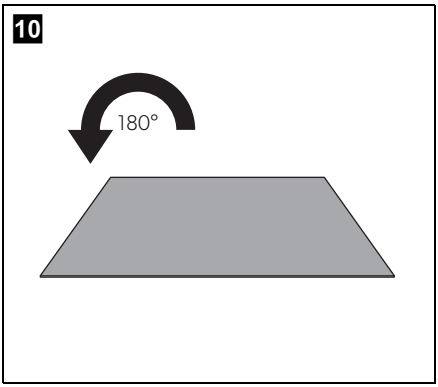
10
180°

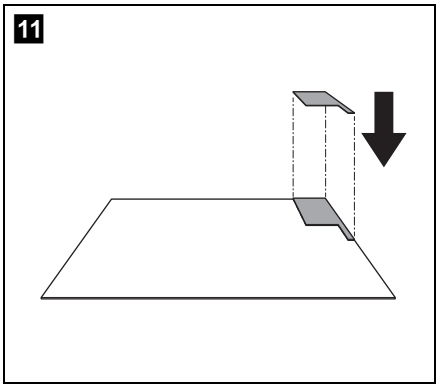
11

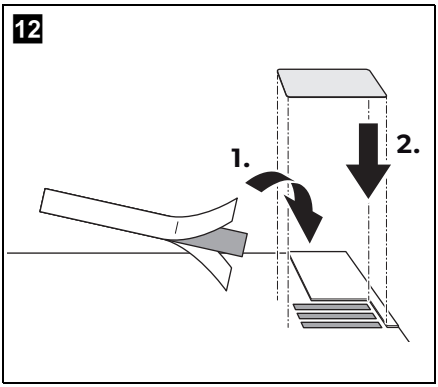
12
1.
2.

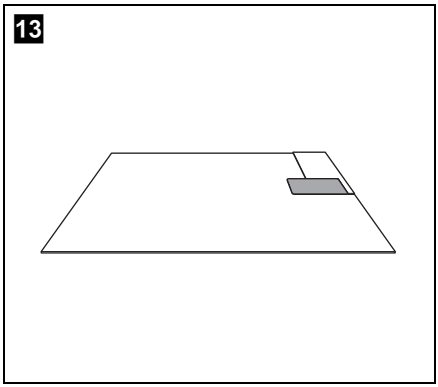
13

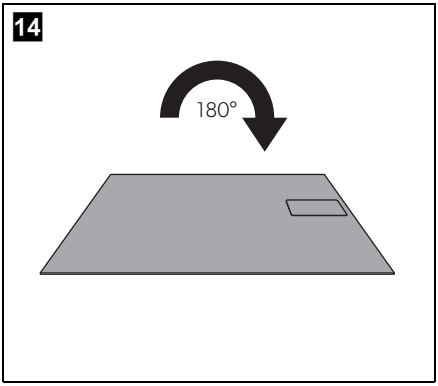
14
180°

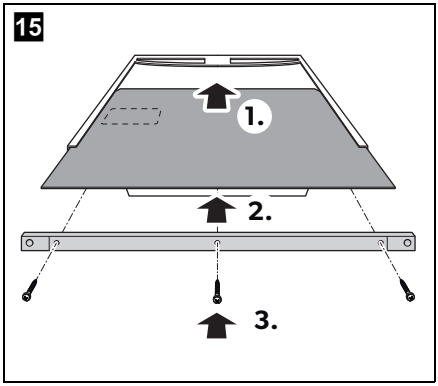
15
1.
2.
3.

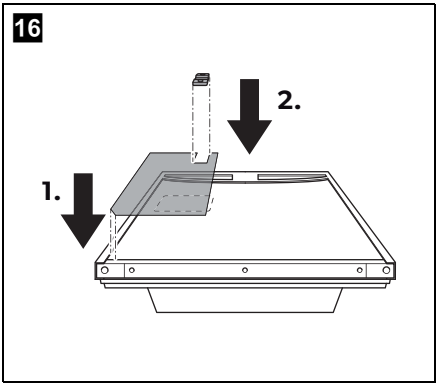
16
2.
1.

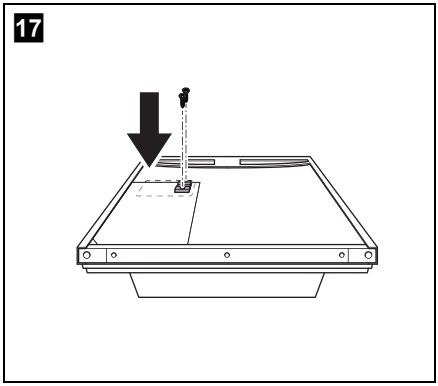
17

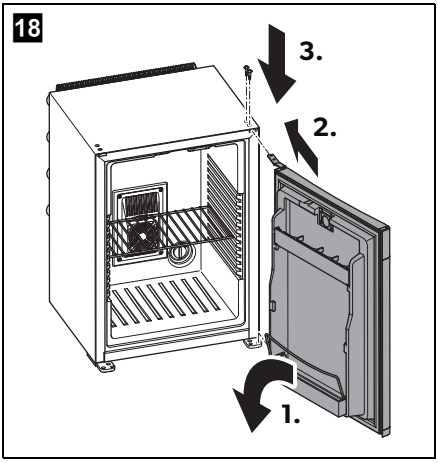
18
3.
2.
1.

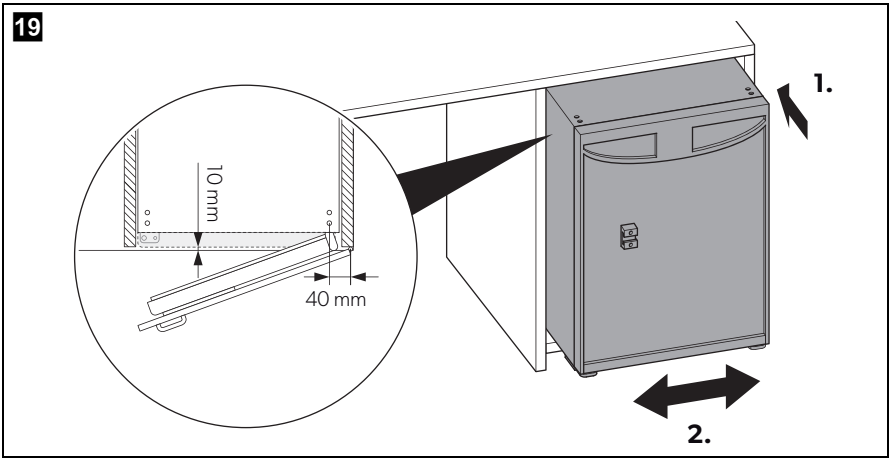
19
10 mm
40 mm
1.
2.

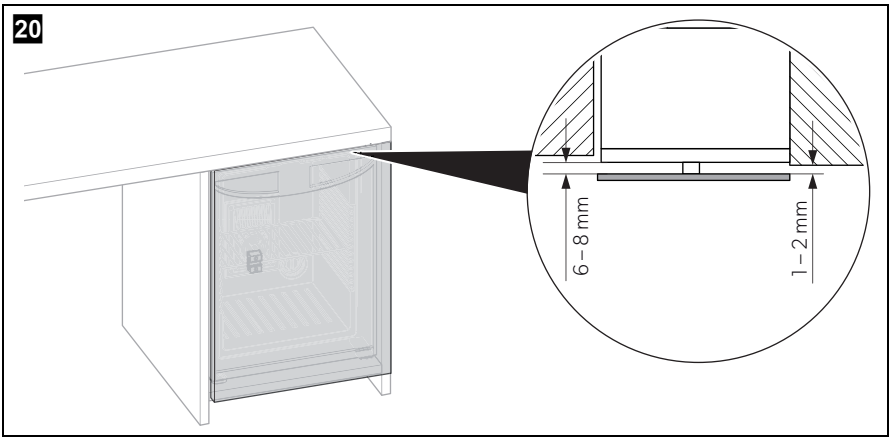
20
6 – 8 mm
1 – 2 mm

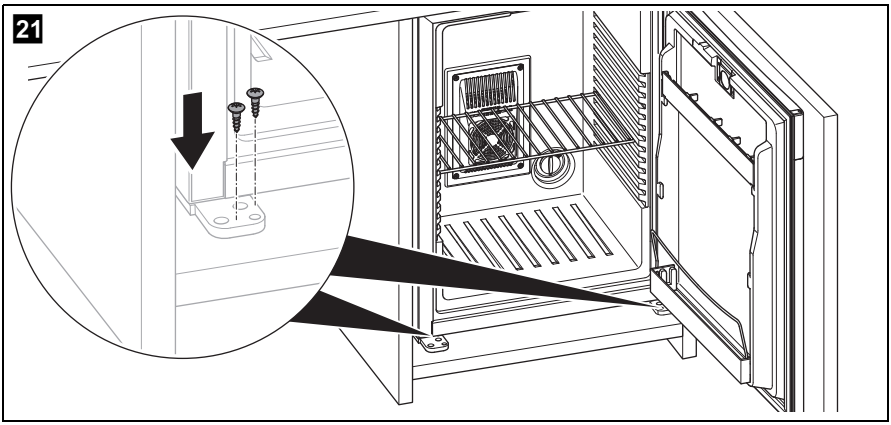
21

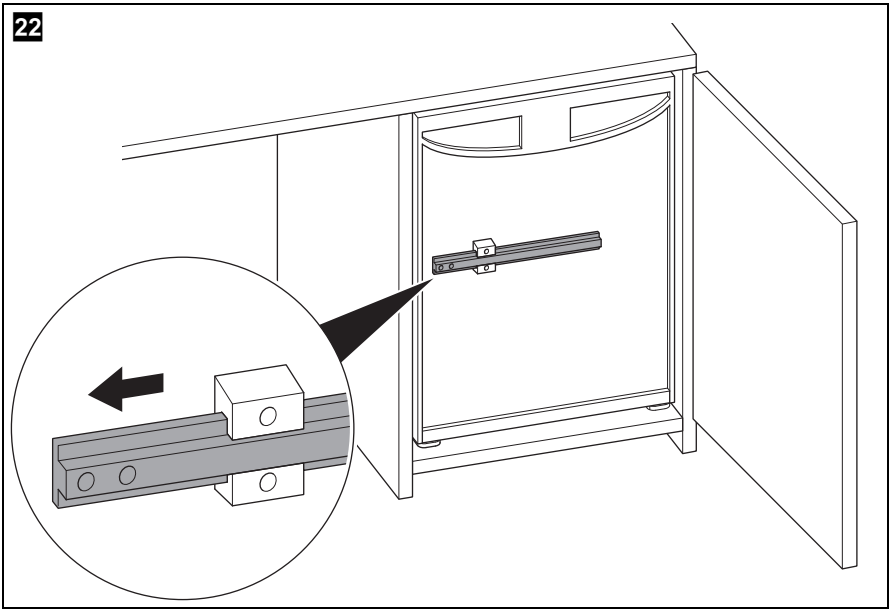
22

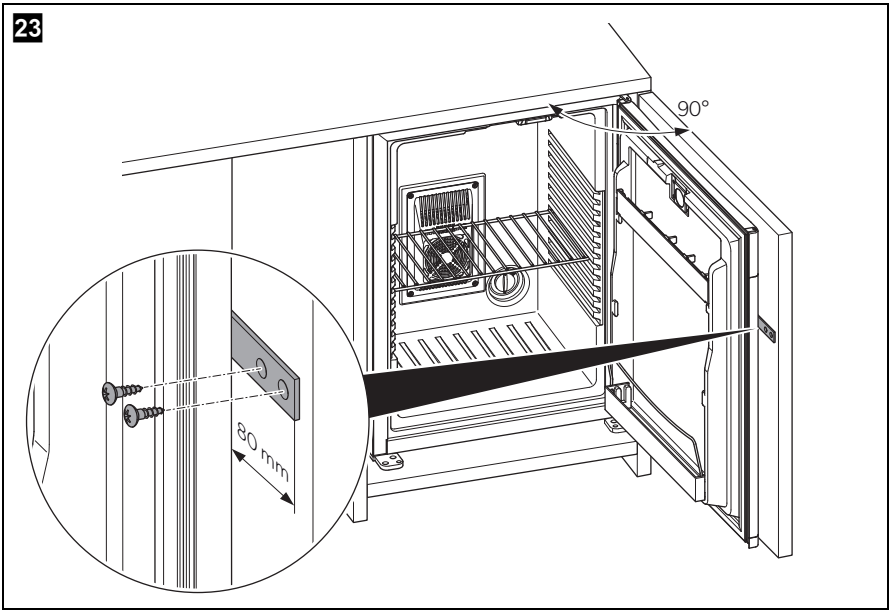
23
90°
80 mm

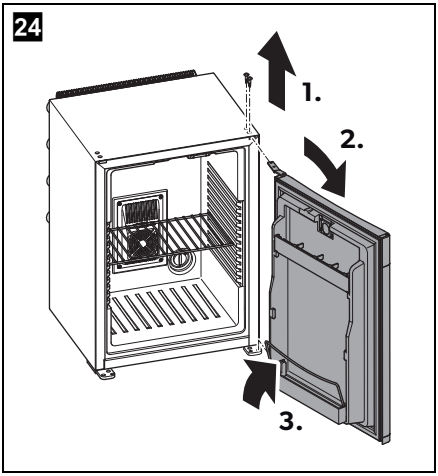
24
1.
2.
3.

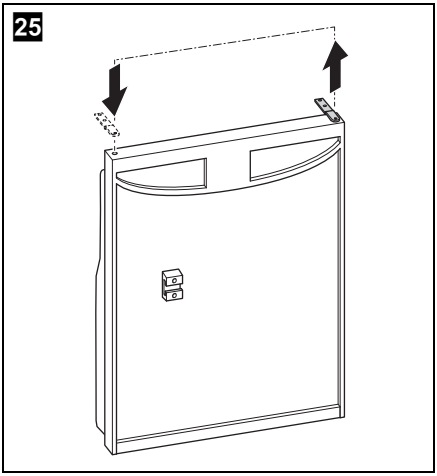
25

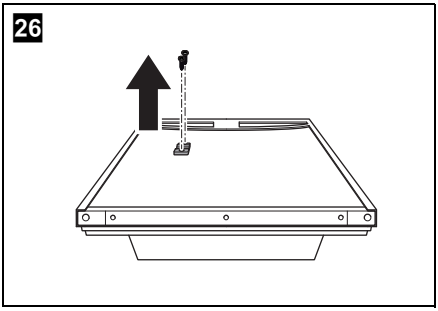
26

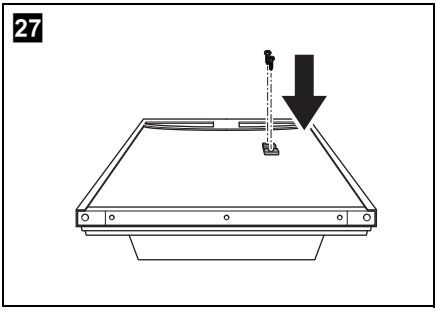
27

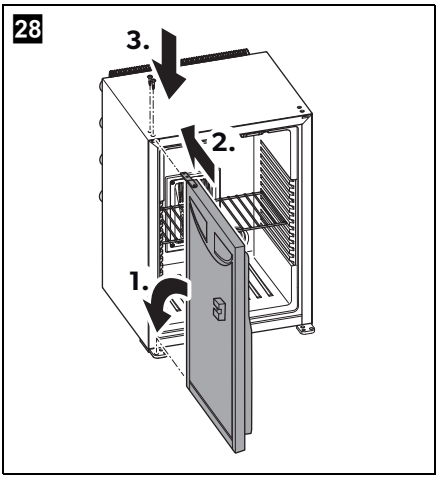
28
3.
2.
1.

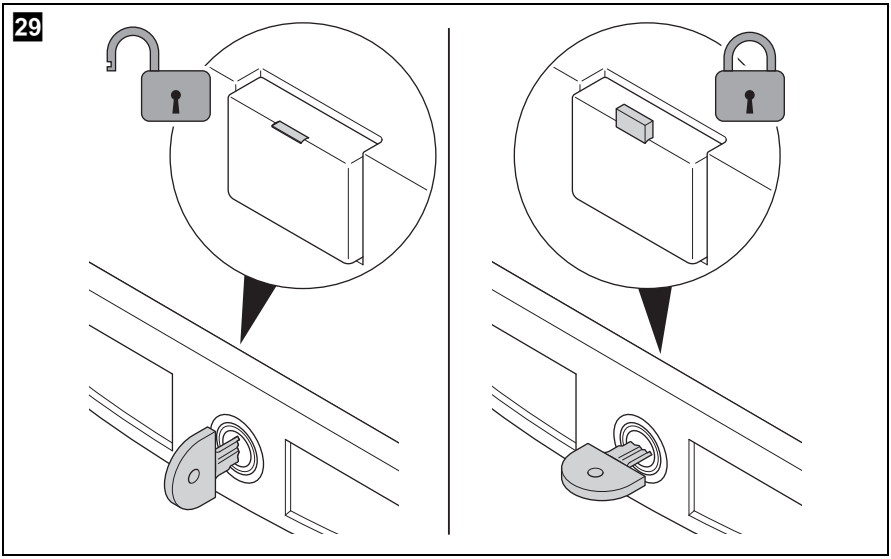
29

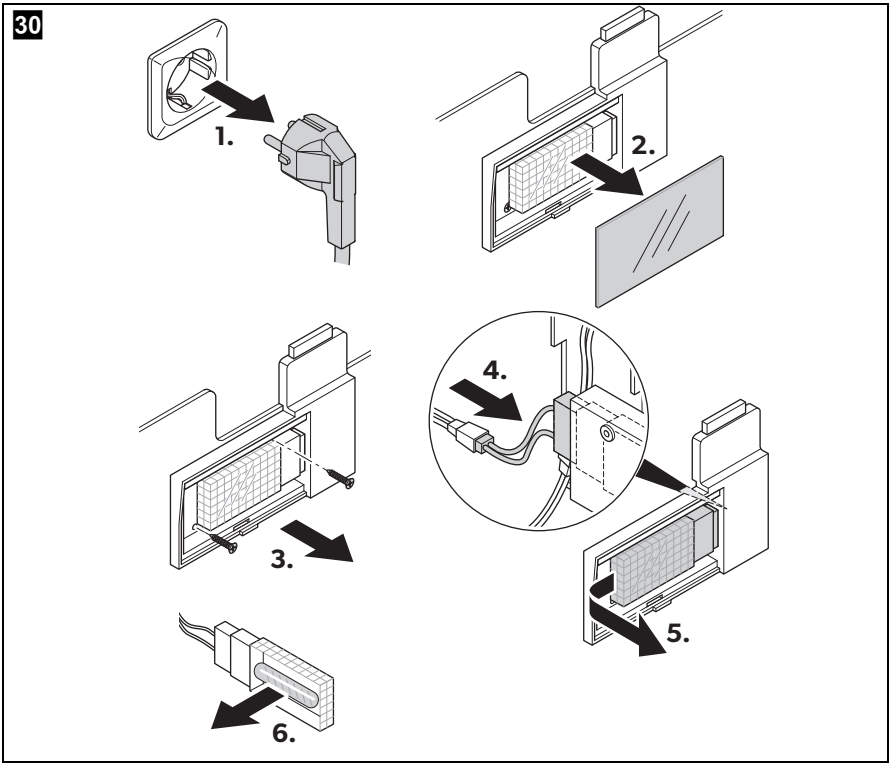
30
1.
2.
3.
4.
5.
6.

Please read this manual carefully before starting the device. Keep it in a safe place for future reference. If the device is passed on to another person, this manual must be handed over to the user along with it.

The manufacturer cannot be held liable for damage resulting from **improper usage** or **incorrect operation**.

Contents

1 Explanation of symbols 10
2 Safety instructions 11
3 Intended use 13
4 Technical description 13
5 Installation 13
6 Operation 14
7 Cleaning and maintenance 16
8 Troubleshooting 17
9 Disposal 17
10 Technical data 18

1 Explanation of symbols

WARNING!
Safety instruction: Failure to observe this instruction can cause fatal or serious injury.

CAUTION!
Safety instruction: Failure to observe this instruction can lead to injury.

NOTICE!
Failure to observe this instruction can cause material damage and impair the function of the product.

NOTE
Supplementary information for operating the product.

2 Safety instructions

2.1 General safety

WARNING!

- Do not operate the cooling device if it is visibly damaged.
- If this cooling device's power cable is damaged, it must be replaced by the manufacturer, customer service or a similarly qualified person in order to prevent safety hazards.
- This cooling device may only be repaired by qualified personnel. Improper repairs can lead to considerable hazards.
- This cooling device can be used by children aged 8 years or over, as well as by persons with diminished physical, sensory or mental capacities or a lack of experience and/or knowledge, providing they are supervised or have been taught how to use the cooling device safely and are aware of the resulting risks.
- Cleaning and user maintenance must not be carried out by children without supervision.
- Children must not play with the cooling device.
- Children must be supervised to ensure that they do not play with the cooling device.
- Always keep and use the cooling device out of the reach of children under the age of 8 years.
- Do not store any explosive substances such as spray cans with a flammable propellant in the cooling device.

CAUTION!

- Disconnect the cooling device from the power supply
  - before each cleaning and maintenance
  - after every use
- Food may only be stored in its original packaging or in suitable containers.

NOTICE!

- Check that the voltage specification on the type plate corresponds to that of the energy supply.
- Connect the cooling device with an AC connection cable to the AC power supply.
- Never pull the plug out of the socket by the cable.
- The cooling device is not suitable for transporting caustic materials or materials containing solvents.
- The insulation of the cooling device contains flammable cyclopentane and requires special disposal procedures. Deliver the cooling device at the end of its life-cycle to an appropriate recycling center.

2.2 Operating the cooling device safely

CAUTION!

- Before starting the cooling device, ensure that the power supply line and the plug are dry.

NOTICE!

- Do not use electrical devices inside the cooling device unless they are recommended by the manufacturer for the purpose.
- Do not place the cooling device near naked flames or other heat sources (heaters, direct sunlight, gas ovens etc.).
- **Danger of overheating!**
  Ensure at all times that there is a minimum of 50 mm ventilation on all four sides of the cooling device. Keep the ventilation area free of any objects that could restrict the air flow to the cooling components.
  Do not place the cooling device in closed compartments or areas with none or minimal air flow.
- Ensure that the ventilation openings are not covered.
- Do not fill the inner container with ice or fluids.
- Never immerse the cooling device in water.
- Protect the cooling device and the cable against heat and moisture.

3 Intended use

The cooling device is suitable for cooling beverages and snacks.

The device is designed for use with AC mains supply.

CAUTION! Health hazard!
Please check if the cooling capacity of the device is suitable for storing the food or medicine you wish to cool.

4 Technical description

The cooling device can cool products and keep them cool. A grid divider can be used to separate foodstuffs, e.g. bottles and sweets. The cooling device operates with a compressor cooling system.

Control element

No. in fig. 1, page 2	Description
1	Temperature controller

5 Installation

The cooling device is designed for free-standing installation, but can be built-in if the following conditions are complied with to ensure satisfactory operation and maximum cooling efficiency.

- The cooling device must be levelled carefully to ensure proper function.
- The clearance between the cooling device's back and the wall should be 20 mm or more.
- Ventilation must be provided as shown in alternatives A, B, C or D (fig. 2, page 2).
- The ventilation duct must at least measure 105 mm x the width of the cooling device.
- Only the entire cooling unit must project into the ventilation duct as shown (fig. 2, page 2).
- Air passing through the ventilation duct must not be preheated by any source of heat.

- Ventilation grills, if used, must have openings of at least 200 cm^2 each.
- For glass door version, when ambient humidity is above 65 % in 25 °C ambient temperature, moisture will condense on the door.
- The cooling device can be fixed to the bottom of the furniture through its fixing feets using screws of an appropriate length (fig. 3, page 2).
- The socket outlet for the mains connection must be freely accessible.

5.1 Changing the decorative plate

You can change the decorative plate: fig. 4 to fig. 7, page 3.

5.2 Mounting the sliding hinge (optional)

You can mount a sliding hinge that allows the cooling device door to be opened at the same time as the door of the built-in cabinet: fig. 8, page 4, to fig. 23, page 7.

5.3 Reversing the door

Reverse the door as follows: fig. 24 to fig. 28, page 8.
Suitable for doors with sliding hinge only: fig. 26 to fig. 27, page 8.

6 Operation

CAUTION! Health hazard!
Food may only be stored in its original packaging or in suitable containers.

NOTE
- Before starting your new cooling device for the first time, you should clean it inside and outside with a damp cloth for hygienic reasons (please also refer to the chapter “Cleaning and maintenance” on page 16).
- A few water drops may form inside the cooling device if it has been cooling for a lengthy period. This is normal because the moisture in the air condenses to water when the temperature in the cooling device falls. The cooling device is not defective. Wipe it out with a dry cloth if necessary.

6.1 Energy saving tips

- Choose a well ventilated location which is protected from direct sunlight.
- Allow warm food to cool down first before placing it in the cooling device to keep cool.
- Do not open the cooling device more often than necessary.
- Do not leave the cooling device open for longer than necessary.

6.2 Using the cooling device

NOTICE! Risk of damage

- Ensure that the objects placed in the cooling device are suitable for cooling to the selected temperature.
- Ensure that food or liquids in glass containers are not excessively refrigerated. Liquids expand when they freeze and can therefore destroy the glass containers.
- Ensure that your cooling device is well ventilated so that any heat created can dissipate. Otherwise proper functioning cannot be ensured. It is especially important not to cover the air vents.

NOTE

If you are not going to use the cooling device for a long time, leave the door slightly ajar to prevent unpleasant odours building up.

➤ Place the cooling device on a firm base.

➤ Connect the connection cable to the AC mains supply.

✓ The cooling device starts cooling the interior.

➤ Set the temperature controller (fig. 1 1, page 2) to the desired position:
  – max: lowest temperature
  – min: highest temperature

➤ If you wish to switch the cooling device off, pull out the connection cable.

➤ Clean the interior to make sure it is dry enough.

6.3 Locking the door

➤ Turn the key a quarter turn to the left to lock the cooling device (fig. 29, page 9).

6.4 Changing the LED light

➤ Change the LED light as follows: fig. 30, page 9.

7 Cleaning and maintenance

WARNING!
Always disconnect the device from the power supply before you clean and service it.

NOTICE! Risk of damage
- Never clean the cooling device under running water or in dish water.
- Do not use abrasive cleaning agents or hard objects during cleaning as these can damage the cooling device.

➤ Use a soft cloth, lukewarm water and a mild detergent to clean the inside of the cooling device.

➤ Wash out the cooling device using clean water and dry thoroughly.

➤ At annual intervals, remove dust from the cooling aggregate at the back of the cooling device using a brush or a soft cloth.

8 Troubleshooting

Problem	Possible cause	Suggested remedy
No voltage present	There is an interruption in the battery – electronics connection.	Establish a connection.
	Main switch faulty (if installed)	Replace the main switch.
	Additional supply line fuse has blown (if installed).	Replace the supply line fuse.
Voltage is present but the compressor doesn't run (connected to AC supply)	Ambient temperature too high.	
	Insufficient ventilation	Move the refrigerator to another location.
	Condenser is dirty.	Clean the condenser.
Poor cooling, compressor running for a long time / continuously	Ambient temperature too high	
	Insufficient ventilation	Move the refrigerator to another location.
	Condenser is dirty.	Clean the condenser.
Too cold or a great temperature deviation	Defective compressor	Replace compressor

9 Disposal

➤ Place the packaging material in the appropriate recycling waste bins wherever possible.

If you wish to finally dispose of the product, ask your local recycling centre or specialist dealer for details about how to do this in accordance with the applicable disposal regulations.

10 Technical data

	CL 440LDC	CL 440LGC
Gross capacity:	38 l	
Connection voltage – 110 V version: – 230 V version:	 100 – 120 V~, 60 Hz 220 – 240 V~, 50 Hz	
Power consumption:	55 W 12.1 W (100 – 240 V~, ECO mode)	
Temperature range:	+4 °C to +12 °C	
Category:	1 (Fresh food storage compartment)	2 (Cellar)
Energy efficiency class:	A+	
Energy consumption:	99 kWh/annum	95 Wh/annum
Usable capacity:	34.5 l	35.5 l
Climate class:	N	
Refrigerant quantity:	21 g	
CO_2 equivalent:	0.030 t	
Global warming potential (GWP):	1430	
Ambient temperature:	+16 °C to +32 °C	
Noise emission (sound power):	42 dB	
Dimensions (W x H x D):	401 x 554 x 440 mm	401 x 554 x 450 mm
Weight:	17.2 kg	18.9 kg
Testing/certification:	CE TÜVRheinland ZERTIFIZIERT GS geprüfte Sicherheit	

	CL460LDC	CL460LGC
Gross capacity:	60 l	
Connection voltage – 110 V version: – 230 V version:	 100 – 120 V~, 60 Hz 220 – 240 V~, 50 Hz	
Power consumption:	55 W 12.1 W (100 – 240 V~, ECO mode)	
Temperature range:	+4 °C to +12 °C	
Category:	1 (Fresh food storage compartment)	2 (Cellar)
Energy efficiency class:	A+	
Energy consumption:	101 kWh/annum	96 Wh/annum
Usable capacity:	49 l	50 l
Climate class:	N	
Refrigerant quantity:	35 g	
CO_2 equivalent:	0.050 t	
Global warming potential (GWP):	1430	
Ambient temperature:	+16 °C to +32 °C	
Noise emission (sound power):	42 dB	
Dimensions (W x H x D):	485 x 562 x 475 mm	485 x 562 x 485 mm
Weight:	19.5 kg	21.5 kg
Testing/certification:	CE TÜVRheinland ZERTIFIZIERT GS geprüfte Sicherheit	

The coolant circuit contains R134a.

Contains fluorinated greenhouse gases

Hermetically sealed equipment

GERMANY
Dometic WAECO International GmbH
Hollefeldstraße 63 · D-48282 Emsdetten
☏ +49 (0) 2572 879-0 · 🖷 +49 (0) 2572 879-300
Mail: info@dometic-waeco.de

dometic.com

DOMETIC

AUSTRALIA
Dometic Australia Pty. Ltd.
1 John Duncan Court
Varsity Lakes QLD 4227
☏ 1800 212121
🖷 +61 7 55076001
Mail: sales@dometic.com.au

AUSTRIA
Dometic Austria GmbH
Neudorferstraße 108
A-2353 Guntramsdorf
☏ +43 2236 908070
🖷 +43 2236 90807060
Mail: info@dometic.at

BENELUX
Dometic Branch Office Belgium
Lourdesstraat 84
B-8940 Geluwe
☏ +32 2 3598040
🖷 +32 2 3598050
Mail: info@dometic.be

BRAZIL
Dometic DO Brasil LTDA
Avenida Paulista 1754, conj. 111
SP 01310-920 Sao Paulo
☏ +55 11 3251 3352
🖷 +55 11 3251 3362
Mail: info@dometic.com.br

DENMARK
Dometic Denmark A/S
Nordensvej 15, Taulov
DK-7000 Fredericia
☏ +45 75585966
🖷 +45 75586307
Mail: info@dometic.dk

FINLAND
Dometic Finland OY
Mestarintie 4
FIN-01730 Vantaa
☏ +358 20 7413220
🖷 +358 9 7593700
Mail: info@dometic.fi

FRANCE
Dometic SAS
ZA du Pré de la Dame Jeanne
B.P. 5
F-60128 Plailly
☏ +33 3 44633525
🖷 +33 3 44633518
Mail : vehiculesdeloisirs@dometic.fr

HONG KONG
Dometic Group Asia Pacific
Suites 2207-11 · 22/F · Tower 1
The Gateway · 25 Canton Road,
Tsim Sha Tsui · Kowloon
☏ +852 2 4611386
🖷 +852 2 4665553
Mail: info@waeco.com.hk

HUNGARY
Dometic Zrt. Sales Office
Kerékgyártó u. 5.
H-1147 Budapest
☏ +36 1 468 4400
🖷 +36 1 468 4401
Mail: budapest@dometic.hu

ITALY
Dometic Italy S.r.l.
Via Virgilio, 3
I-47122 Forlì (FC)
☏ +39 0543 754901
🖷 +39 0543 754983
Mail: vendite@dometic.it

JAPAN
Dometic KK
Maekawa-Shibaura, Bldg. 2
2-13-9 Shibaura Minato-ku
Tokyo 108-0023
☏ +81 3 5445 3333
🖷 +81 3 5445 3339
Mail: info@dometic.jp

MEXICO
Dometic Mx, S. de R. L. de C. V.
Circuito Médicos No. 6 Local 1
Colonia Ciudad Satélite
CP 53100 Naucalpan de Juárez
Estado de México
☏ +52 55 5374 4108
🖷 +52 55 5393 4683
Mail: info@dometic.com.mx

NETHERLANDS
Dometic Benelux B.V.
Ecustraat 3
NL-4879 NP Etten-Leur
☏ +31 76 5029000
🖷 +31 76 5029019
Mail: info@dometic.nl

NEW ZEALAND
Dometic New Zealand Ltd.
PO Box 12011
Penrose
Auckland 1642
☏ +64 9 622 1490
🖷 +64 9 622 1573
Mail: customerservices@dometic.co.nz

NORWAY
Dometic Norway AS
Østerøyveien 46
N-3232 Sandefjord
☏ +47 33428450
🖷 +47 33428459
Mail: firmapost@dometic.no

POLAND
Dometic Poland Sp. z o.o.
Ul. Puławska 435A
PL-02-801 Warszawa
☏ +48 22 414 3200
🖷 +48 22 414 3201
Mail: info@dometic.pl

PORTUGAL
Dometic Spain, S.L.
Branch Office em Portugal
Rot. de São Gonçalo nº 1 – Esc. 12
2775-399 Carcavelos
☏ +351 219 244 173
🖷 +351 219 243 206
Mail: info@dometic.pt

RUSSIA
Dometic RUS LLC
Komsomolskaya square 6-1
RU-107140 Moscow
☏ +7 495 780 79 39
🖷 +7 495 916 56 53
Mail: info@dometic.ru

SINGAPORE
Dometic Pte Ltd
18 Boon Lay Way
06–141 Trade Hub 21
Singapore 609966
☏ +65 6795 3177
🖷 +65 6862 6620
Mail: dometic@dometic.com.sg

SLOVAKIA
Dometic Slovakia s.r.o.
Sales Office Bratislava
Nádražná 34/A
900 28 Ivánka pri Dunaji
☏/🖷 +421 2 45 529 680
Mail: bratislava@dometic.com

SOUTH AFRICA
Dometic (Pty) Ltd.
Regional Office
South Africa & Sub-Saharan Africa
2 Avalon Road
West Lake View Ext 11
Modderfontein 1645
Johannesburg
☏ +27 87 3530380
Mail: info@dometic.co.za

SPAIN
Dometic Spain S.L.
Avda. Sierra del Guadarrama, 16
E-28691 Villanueva de la Cañada
Madrid
☏ +34 91 833 60 89
🖷 +34 900 100 245
Mail: info@dometic.es

SWEDEN
Dometic Scandinavia AB
Gustaf Melins gata 7
SE-42131 Västra Frölunda
☏ +46 31 7341100
🖷 +46 31 7341101
Mail: info@dometicgroup.se

SWITZERLAND
Dometic Switzerland AG
Riedackerstrasse 7a
CH-8153 Rümlang
☏ +41 44 8187171
🖷 +41 44 8187191
Mail: info@dometic.ch

UNITED ARAB EMIRATES
Dometic Middle East FZCO
P. O. Box 17860
S-D 6, Jebel Ali Freezone
Dubai
☏ +971 4 883 3858
🖷 +971 4 883 3868
Mail: info@dometic.ae

UNITED KINGDOM
Dometic UK Ltd.
Dometic House, The Brewery
Blandford St. Mary
Dorset DT11 9LS
☏ +44 344 626 0133
🖷 +44 344 626 0143
Mail: customerservices@dometic.co.uk

USA
Dometic RV Division
1120 North Main Street
Elkhart, IN 46515
☏ +1 574-264-2131

4450018038 08/2018