DOMETIC

Door Hinge Reversing Instructions For The Following Kits:

293275011 Right To Left, Black
293275012 Left To Right, Black

This kit contains:

3 Plug, Hinge Holes (Front Frame Face)
2 Hinge, Door (Upper And Lower)
1 Bracket, Top Decoration
4 Plug, Handle Holes (Door Edge)
1 Label, Door
1 Cap, Upper Hinge Pin
4 Plug, Hinge Holes (Front Frame Edge)

Note: The illustrations in this instruction show in steps, how to change from right to left hinged door.

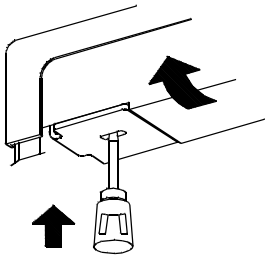

STEP 1:

Open the door(s). Remove the top decoration panel. Put the panel on the top of the refrigerator.

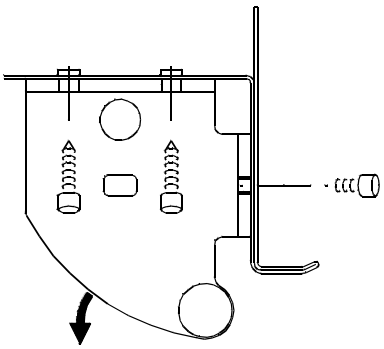

STEP 2:

Close the door(s). Remove the 3 screws fastening the upper hinge. Save the screws for reinstall in step 33. Leave the hinge pin in its place. Rotate the complete hinge and pull it out of the bushing.

STEP 3:

Open the upper door 90° and remove it from the refrigerator by lifting it off the lower door pin. Please note you have taken away the upper pin.

Note: When you open and lift the door, be careful so that you don't bend the lower pin.

Note: Place the door on a soft material in order not to scratch it.

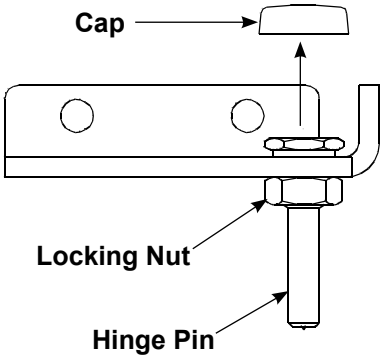

STEP 4:

(Not valid for model NDR1062)
Remove the cap.

Note: You may have to destroy the cap.

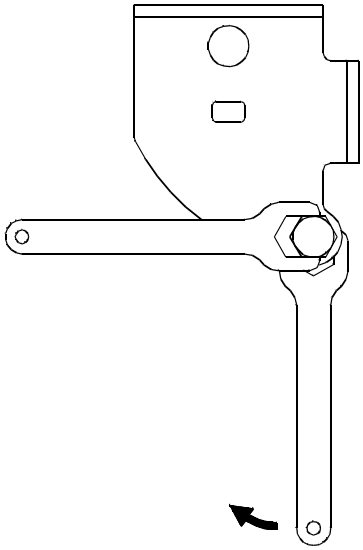

STEP 5:

Use a wrench to hold the hinge pin and another one to loosen the locking nut. Unscrew the pin. Save the pin and the locking nut for reinstall in step 6. Throw away the hinge.

REVISION A
Form No. 3314454.000 02/17
(French 3314468.000_A)
©2017 Dometic Corporation
LaGrange, IN 46761

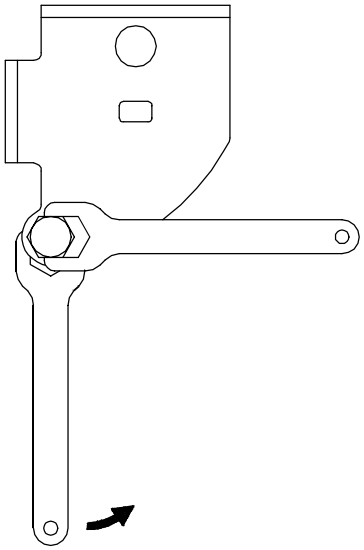

STEP 6:
Screw the pin in an inverted new hinge. Use a wrench to hold the pin while mounting the locking nut with another one. Fit a cap on the head of the pin.

If you have a one-door refrigerator, continue with step 12.

If you have a two-door refrigerator, continue with step 7.

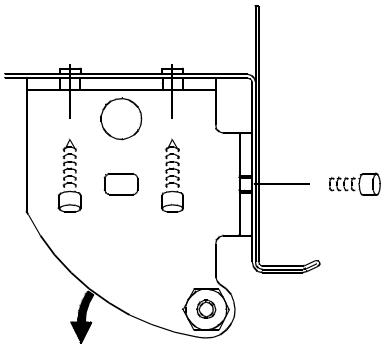

STEP 7:
Remove the 3 screws fastening the middle hinge. Save the screws for reinstall in step 31. Leave the hinge pin in its place. Rotate the complete hinge and pull it out of the bushing.

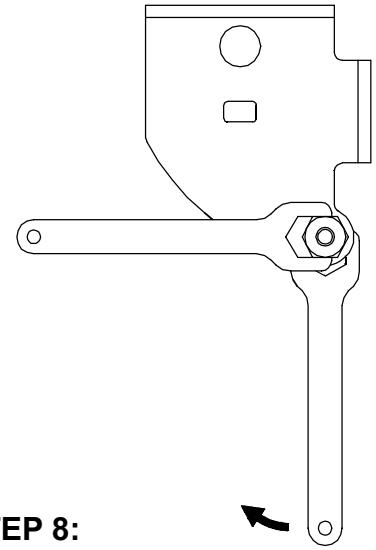

STEP 8:
Use a wrench to hold the hinge pin and another one to loosen the locking nut. Unscrew the pin. Save the pin and nut for reinstall in step 10.

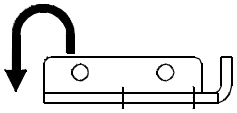

STEP 9:
Turn the hinge removed in step 8 upside down.

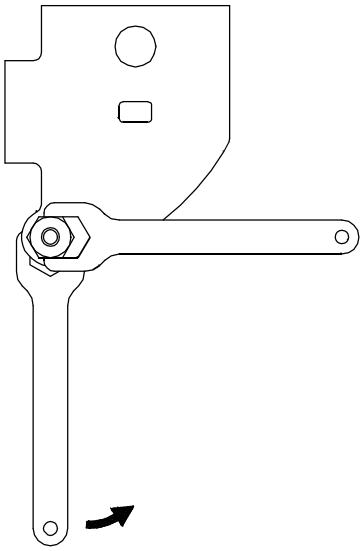

STEP 10:
Screw the pin in the hinge. Use a wrench to hold the pin while mounting the locking nut with another one.

STEP 11:
Open the lower door 90° and lift it off.

Note: When you open and lift the door, be careful so that you don't bend the lower pin.

Note: Place the door on a soft material in order not to scratch it.

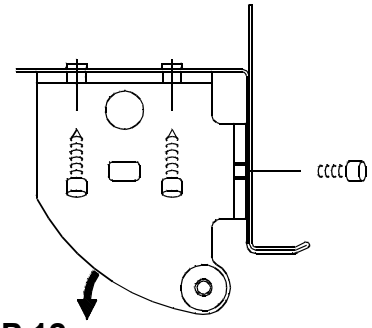

STEP 12:
Remove the 3 screws fastening the lower door hinge and remove it. Save the screws for reinstall in step 29.

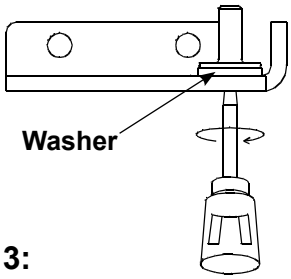

STEP 13:
Use a screwdriver to loosen the pin. Remove the pin and the washer. Throw away the hinge.

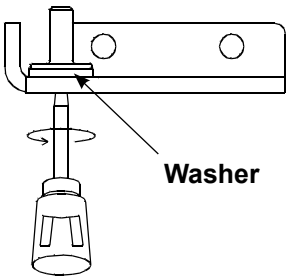

STEP 14:
Mount the washer and the pin on an inverted new hinge. Use a screwdriver to fasten the pin.

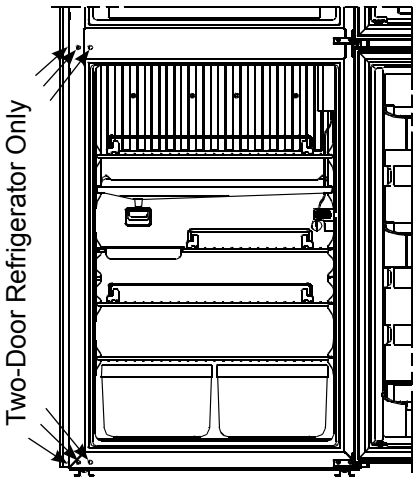

STEP 15:
Remove the plugs in the holes for the hinge(s).

Note: You may have to destroy the plugs.

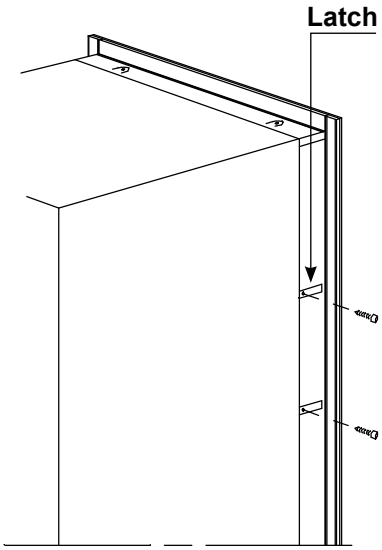

STEP 16:

Remove the latch(s) and move it (them) to the corresponding location at the opposite side of the refrigerator. Place a piece of tape over the empty slots to secure the seal between the combustion compartment and the living space.
If your refrigerator has 4 latches this step is not required.

STEP 17:

Remove the door compartments.

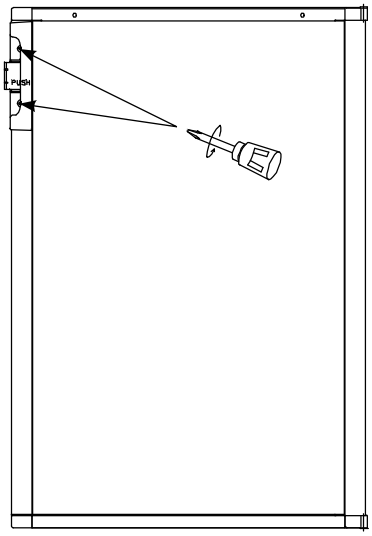

STEP 18:

Remove the handle using a screwdriver to loosen the 2 screws. Save the screws for reinstall in step 24.

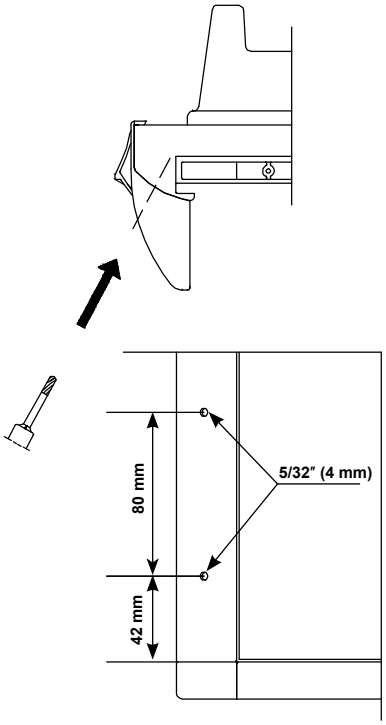

STEP 19:

Before drilling new holes at the lower part of the door use the handle as a master to mark the position of the new holes. Use a drill with a diameter of 5/32″ (4 mm) to drill the two holes as shown in the picture above.

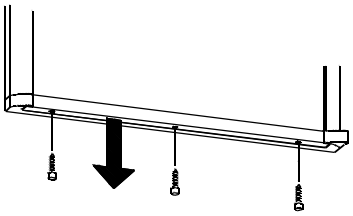

STEP 20:

Loosen the screws and remove the door decoration strip at the lower side of the door(s). Save the screws for reinstall in step 23. Later versions snap into position and do not use screws.

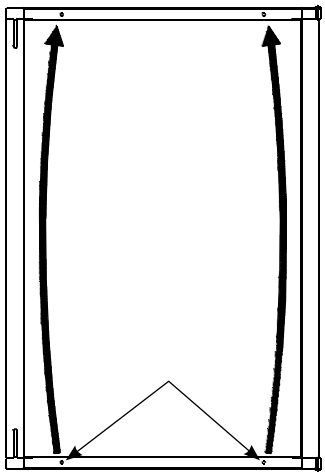

STEP 21:

Use a pair of pliers to remove the plastic pins and move them to the corresponding holes at the opposite end of the door(s).

STEP 22:

Turn the door(s) upside down.

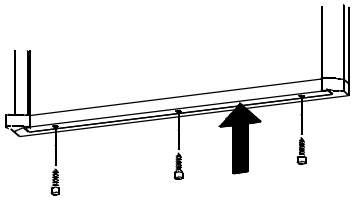

STEP 23:

Using the three screws removed in step 20, install the door decoration strip at the lower side of the door(s). Later versions snap into position.

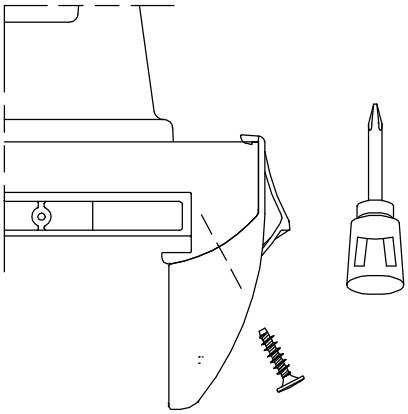

STEP 24:

Using the 2 screws removed in step 18, install the handle on the door(s). The handles are to be located nearest the central girder between the doors on two-door refrigerators or at the top of the door on one-door refrigerators.

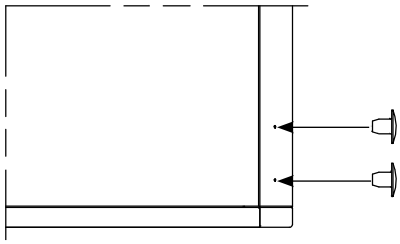

STEP 25:
Fit the plugs in the two holes on the side of the door not occupied by the handle.

STEP 26:
Reinstall the door compartments.

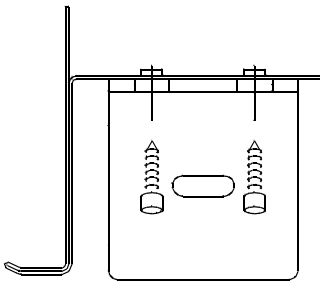

STEP 27:
Remove the 3 screws (if attachment is metal) or 2 screws (if attachment is plastic) fastening the attachment for top decoration. Save 2 screws for reinstall in step 28. Throw away 1 screw and the attachment.

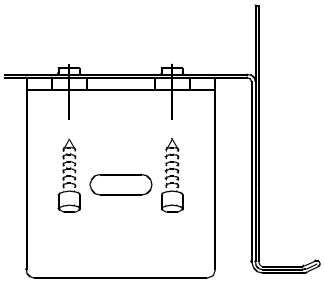

STEP 28:
Using the 2 screws removed in step 27, install the new plastic attachment on the other side of the refrigerator.

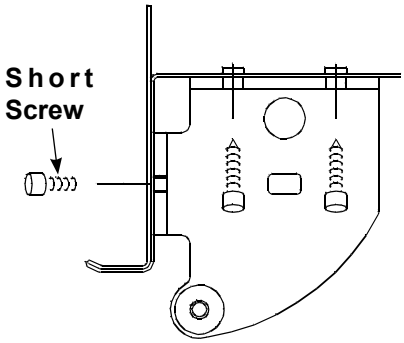

STEP 29:
Using the 3 screws removed in step 12, install the new lower door hinge.

STEP 30:
Put the lower door on the lower hinge. Close the door so the door gasket keeps the door in position.

If you have a one-door refrigerator, continue with step 33.

If you have a two-door refrigerator, continue with step 31.

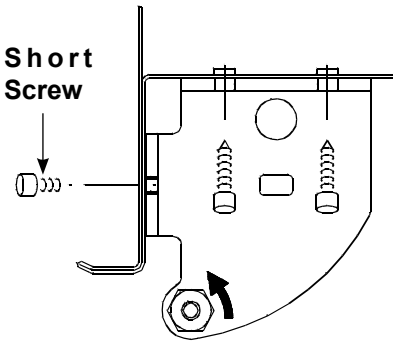

STEP 31:
Fit the hinge pin of the middle door hinge in the bushing of the lower door. Turn it towards the front frame and install the hinge using the 3 screws removed in step 7.

Note: If the hinge is mounted on the left side of the refrigerator, you may have to open the door before you can mount the screws. In that case, ask someone to hold the door for you.

STEP 32:
Put the upper door on the hinge pin of the middle hinge. Close the door so the door gasket keeps the door in position.

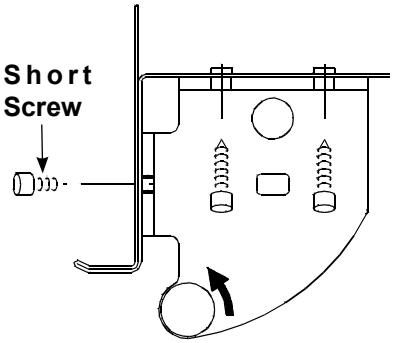

STEP 33:
Fit the hinge pin of the upper door hinge in the bushing of the upper door. Turn it towards the front frame and install the hinge using the 3 screws removed in step 2.

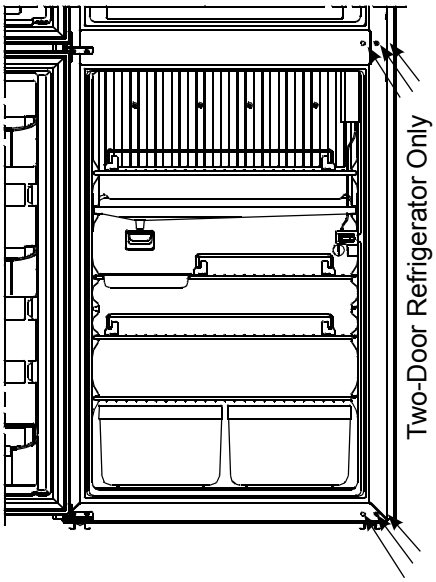

STEP 34:
Fit plugs in the holes not occupied by the hinge(s).

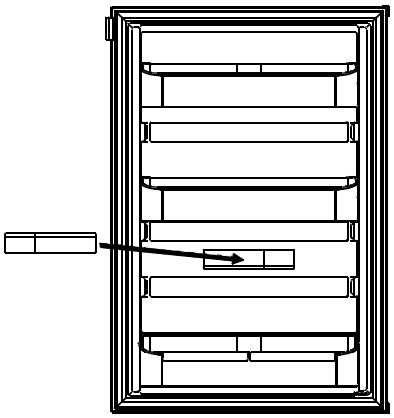

STEP 35:
Fit a new door label over the old one.

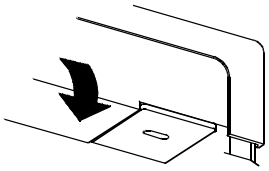

STEP 36:
Install the top decoration panel. Be careful not to pinch any wires.