DOMETIC

HOT PRODUCTS COOKTOP

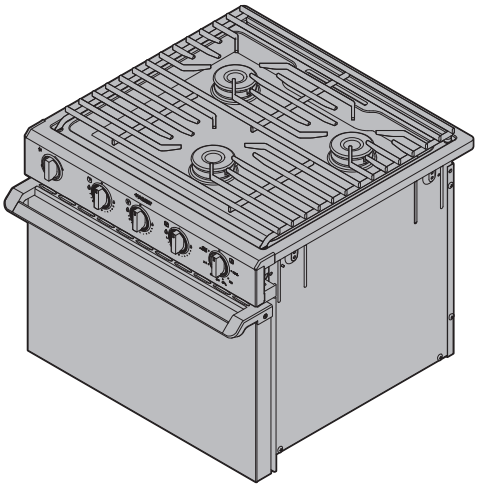

R31 and S31 SERIES

EN **RANGE AND SLIDE-IN**
Installation and Operating Manual

WARNING: If the information in this manual is not followed exactly, a fire or explosion may result causing property damage, personal injury, or death.

– Do not store or use gasoline or other flammable vapors and liquids in the vicinity of this or any other appliance.

– WHAT TO DO IF YOU SMELL GAS

- **Do not try to light any appliance.**
- **Do not touch any electrical switch.**
- **Do not use any phone in your recreational vehicle.**
- **Clear the recreational vehicle of all occupants.**
- **Turn off the gas supply tank valve(s) or main gas supply.**
- **Immediately call your gas supplier for instructions.**
- **If you cannot reach your gas supplier, call the fire department.**

– Have the gas system checked and leakage source corrected by a qualified installer, service agency, manufacturer or dealer, or the gas supplier.

C US

NORTH AMERICAN ADDRESS INFORMATION

USA & CANADA
Service Office
Dometic Corporation
1120 North Main Street
Elkhart, IN 46514

Service Center & Dealer Locations
Visit: www.dometic.com

REVISION D | Form No. 50467 4/18 | ©2018 Dometic Corporation

⚠	**TO THE INSTALLER:**	**LEAVE THIS MANUAL WITH THE APPLIANCE**
	TO THE CONSUMER	**RETAIN THIS MANUAL FOR FUTURE REFERENCE**

CONTENTS

1 Important Safety Instructions and Document Symbols 3
2 General Information 4
3 Intended Use. 4
4 Pre-Installation 4
5 Installation. 6
7 Maintenance 11
8 Storage 13
9 Disposal. 13
10 Replacement Parts 13
Warranty 14

1 IMPORTANT SAFETY INSTRUCTIONS AND DOCUMENT SYMBOLS

This manual has safety information and instructions to help you eliminate or reduce the risk of accidents and injuries.

1.1 Recognize Safety Information

This is the safety alert symbol. It is used to alert you to potential physical injury hazards. Obey all safety messages that follow this symbol to avoid possible injury or death.

1.2 Understand Signal Words

A signal word will identify safety messages and property damage messages, and will indicate the degree or level of hazard seriousness.

WARNING indicates a hazardous situation that, if **not** avoided, could result in death or serious injury.

CAUTION indicates a hazardous situation that, if **not** avoided, could result in minor or moderate injury.

NOTICE is used to address practices **not** related to physical injury.

Indicates additional information that is not related to physical injury.

1.3 Supplemental Directives

Read and follow all safety information and instructions to avoid possible injury or death.
Read and understand these instructions before installation, use, or maintenance of this product.
Incorrect installation, operation, or maintenance of this product can lead to serious injury or death.
The installation **must** comply with all applicable local or national codes, including the latest edition of the following standards:

U.S.A.

- ANSI/NFPA70, National Electrical Code (NEC)
- ANSI/NFPA 1192, Recreational Vehicles Code
- ANSI Z21.57, Recreational Vehicles Code

CANADA

- CSA C22.1, Parts I & II, Canadian Electrical Code
- CSA Z240 RV Series, Recreational Vehicles

1.4 General Safety Messages

WARNING Failure to obey the following warnings could result in property damage, death, or serious injury:

- This product **must** be installed and serviced by a qualified service technician.
- Dometic gas-operated cooking units are for use with liquid propane (LP) gas only and for installation in recreational vehicles only (e.g. travel trailers, motor homes, tent campers, etc.).
- Do **not** store or use gasoline or other flammable vapors and liquids in the vicinity of this or any other appliance.
- Do **not** modify this product in any way. Modification can be extremely hazardous.
- Improper installation, adjustment, service, or maintenance can cause injury, property damage, or death. Refer to this manual. For assistance or additional information, consult a qualified installer, service agency, manufacturer, or gas supplier.
- Do **not** install this cooking unit if any part has been underwater.
- CARBON MONOXIDE HAZARD. This product can produce carbon monoxide, which has no odor and can be life-threatening. Gas flames consume oxygen, which **must** be replaced to assure proper combustion. A window or air vent should be open slightly while using any cooking appliance. Failure to provide fresh air during combustion can lead to carbon monoxide poisoning and could result in serious injury or death.

WARNING BURN HAZARD, FIRE, EXPLOSION, AND/OR CARBON MONOXIDE HAZARD. Never use the range or slide-in as a space heater to heat or warm the room or as a storage space. Doing so may result in a burn, a fire or explosion, and/or carbon monoxide poisoning and overheating of the room.

2 GENERAL INFORMATION

Recommended Tools	
Phillips Screwdriver	Drill

Optional Parts*	Reference Number
Bi-Fold Covers	See www.dometic.com

*Available as accessory (not included).

3 INTENDED USE

This range or slide-in is designed and intended for use inside the recreational vehicle (hereinafter referred to as "RV") for which it is supplied. Use the instructions to ensure correct installation, operation, and maintenance of the range or slide-in. This range or slide-in is not designed for installation adjacent to another range or slide-in. Dometic Corporation reserves the right to modify appearances and specifications without notice.

Dometic Corporation accepts no liability for damage in the following cases:

- Faulty assembly or connection.
- Damage to the product resulting from mechanical influences and excess voltage.
- Alterations to the product without express permission from the manufacturer.
- Use for purposes other than those described in the operating manual.

4 PRE-INSTALLATION

⚠ WARNING FIRE HAZARD. Failure to obey the warnings or pre-installation instructions in this section could result in property damage, death, or serious injury.

4.1 Preparing The Cabinet

The minimum vertical distance to combustible material is 18"above the top of the range or slide-in. The range or slide-in must be installed in accordance with Clause 5.6 of ANSI 1192.

For proper range or slide-in operation, the cabinet must:

- Be properly constructed.
- Be squared to the counter top and cabinet face.

For proper range or slide-in operation, the cabinet opening must:

- Be level from side-to-side and from front-to-rear.
- Be positioned so that combustible material cannot be placed next to the range or slide-in sides.
- Be free from gaps between the range or slide-in and any adjacent cabinet.
- Meet the minimum clearances to combustibles as described in "4.2 Cutting The Opening" on page 5.
- Provide direct current electrical supply conductors with strain relief at the range or slide-in.
- Be framed-in or guarded to prevent the creation of storage space around the recessed portion of the appliance, except for the vent thimble.
- Have closed openings around the gas and electrical service outlets at the time of installation, except when the construction of the range or slide-in provides the necessary closure.

4.2 Cutting The Opening

- Verify the cutout location and dimensions. Refer to "Cutout Dimensions" on page 5.
- Cut the hole for the range or slide-in. The cutout is open; no front edge remains on the counter.
- Confirm a propane-certified gas line is in place that meets the appropriate RV and gas codes.

Cutout Dimensions

If using a recessed bi-fold cover, follow the instructions included with the cover for cutout dimensions, installation, and use.

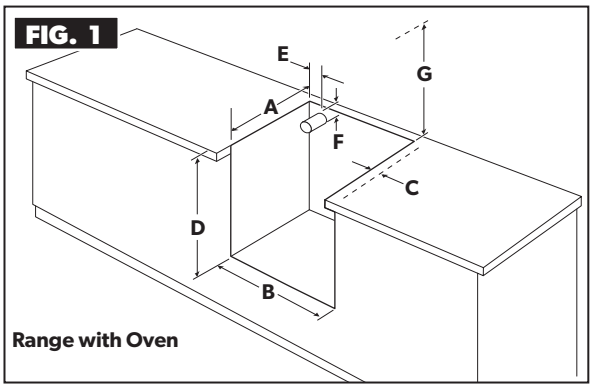

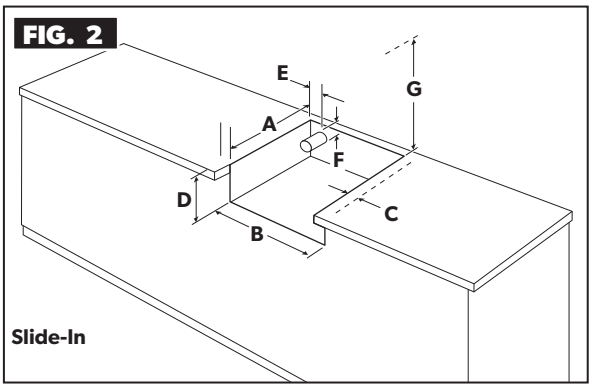

	A	B	C*	D	E	F	G*
17" Ranges	17.75"	20.25"	1.13"	16"	1.75"	1.5"	19.5"
21" Ranges	17.75"	20.25"	1.13"	20"	1.75"	1.5"	19.5"
Slide-in	17.75"	20.25"	1.13"	3.125"	1.75"	1.5"	19.5"

*The minimum clearance to combustible materials allowed from the surface of the range or slide-in to a combustible object (curtains, board, wall, floor, etc.). Consider both sides, the back side, and above the cabinet when determining clearances. These measurements do not apply to a side-by side installation. The range or slide-in is not intended for side-by side installations with another range or slide-in.

The maximum depth of cabinets installed above the range or slide-in is 13". Do not install any structure directly above the stove (for the width of the stove) except a range hood.

Range Top Mounting Dimensions

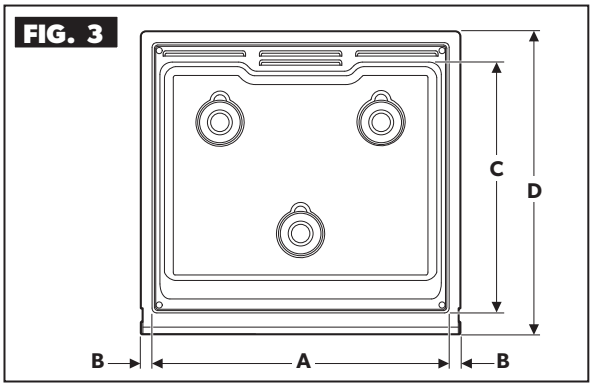

	A	B	C	D
Range Top	19-3/8"			
Mounting Trim		3/4"		
Range Top Depth			16-1/2"	
Range Top Plus Oven Vent				20"

5 INSTALLATION

⚠WARNING ELECTRICAL SHOCK, FIRE, EXPLOSION, AND/OR CARBON MONOXIDE HAZARD. Failure to obey the warnings or installation instructions in this section could result in property damage, death, or serious injury:

- The range or slide-in **must** be completely separated and/or sealed from other air moving or air-consuming devices such as, but not limited to, furnaces, microwave ovens, clothes dryers, cooling fans, and doors or drawers in common cabinets. Failure to do so can affect the appliance(s) combustion air supply by creating either a negative or positive draft.
- Do **not** use matches, candles, or other sources of ignition to test fittings and gas lines for leaks.
- Do **not** use a ventilation system that blows air downward toward the range or slide-in, as ignition and combustion problems with the gas cooking appliance could occur.
- Direct current electrical supply conductors **must** be provided with strain relief at the range or slide-in.

5.1 Installing The Range Or Slide-In

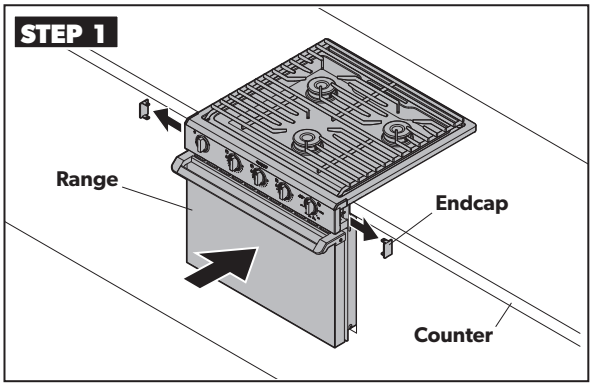

- Remove the endcaps and place the range or slide-in within the cutout.
- Verify the range or slide-in is level on all sides.

If using a recessed bi-fold cover, the endcaps remain attached to the range or slide-in.

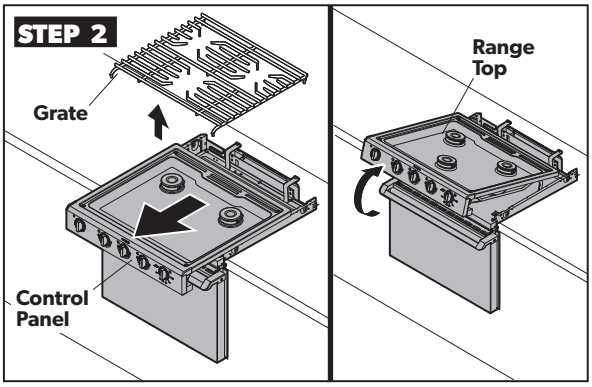

- Remove the grate and pull the range or slide-in forward.
- Lift up the range or slide-in top.

Do not remove the range or slide-in top by pulling on the grate.

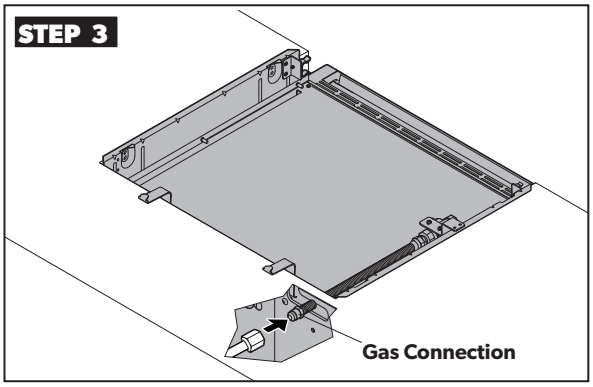

- Connect all gas connections on the range or slide-in and tighten according to the appropriate RV and gas codes.

All openings in the cabinetry around the gas line must be closed at the time of installation.

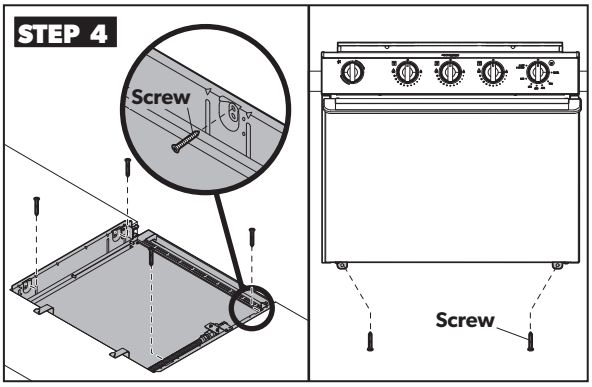

- Secure the range or slide-in by placing wood screws (not provided) through the designated holes and into the cabinet. Do not force the mounting flanges to bend.

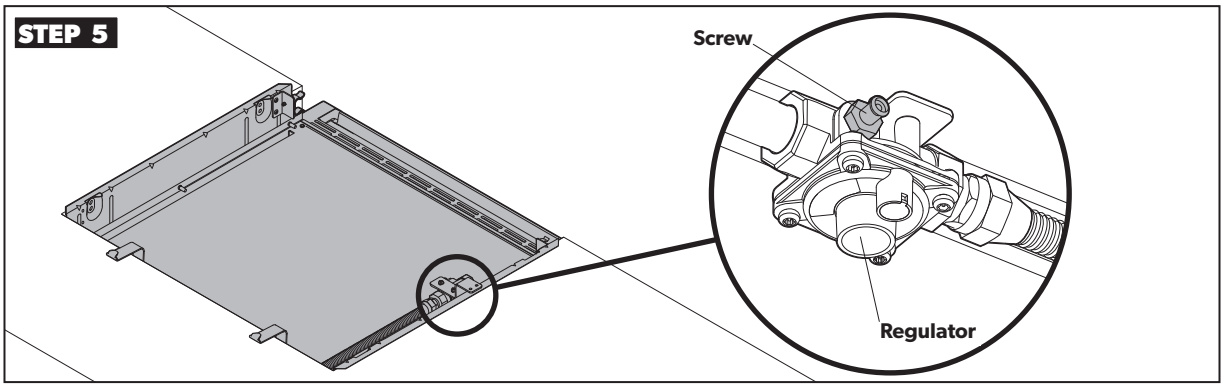

- Turn on the gas supply.
- Conduct the range or slide-in leak testing:
  - Loosen the leak check fitting screw on the regulator by one turn.
  - Place the gauge on the fitting.
  - Check for leaks:
    - Leak testing shall be conducted according to the manufacturer's instructions.
    - Use a non-corrosive leak detection fluid. Do not use soap and water.
    - Leak tests in excess of 1/2" PSI of air pressure will invalidate warranty.
  - Retighten the leak check fitting screw upon completion of the leak test.
- Conduct the range or slide-in gas pressure testing prior to operation.

When conducting the range or slide-in gas pressure testing prior to operation:

- The range or slide-in, and any individual shut-off valves, must be disconnected from the gas supply piping system when pressure testing the system at pressures exceeding 1/2" PSI.
- The gas supply pressure for checking the regulator setting shall be at least 1 in W.C. (249 Pa) above the manufacturer's specified manifold pressure. The maximum gas supply pressure is 14" W.C.

- Turn off the gas supply.

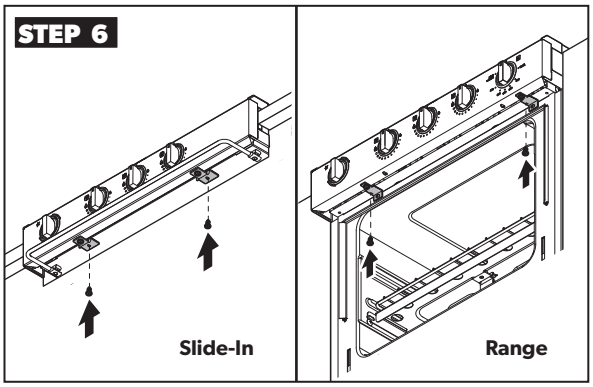

- Slide the range or slide-in back into the cutout.
- Secure the range or slide-in:
  - RANGE: Secure the two brackets with the provided sheet metal screws.
  - SLIDE-IN: Attach the bracket to the burner box with the provided sheet metal screws.
- Replace the grate.

6 OPERATION

6.1 Operating/Safety Guidelines

⚠WARNING BURN, FIRE, EXPLOSION, AND/OR CARBON MONOXIDE HAZARD Failure to obey the following warnings could result in damage, a burn hazard, possible explosion, carbon monoxide buildup, serious injury, or death:

- Do **not** place more than 40 lbs. on the grate while cooking.
- Do **not** place more than 20 lbs. on the oven rack while cooking.
- Do **not** operate the range or slide-in during excessively windy conditions as this may cause a negative or positive draft, which is air moving across the range or slide-in top that may blow out the burner flame during use or move the flame inside of the range or slide-in.
- Use care when lighting a burner by hand. Burns could occur if the burner lights unexpectedly.
- Verify that there is a sufficient gas supply before attempting to light any burner. Air in the line will significantly delay the burner ignition and a burner may light unexpectedly as the air in the line clears out and is replaced by LP gas; this unexpected ignition may cause an explosion or burns.
- If any burner or the oven pilot should unexpectedly extinguish, turn all knobs off and wait five minutes before attempting to re-light the burner or oven pilot.
- Do **not** attempt to light more than one burner at a time.
- Do **not** use the oven as a storage area or space heater.
- Extinguish all pilots when refueling or traveling.
- Do **not** store flammable or combustible material on, in, or near the range or slide-in or in the cabinets above, or above and adjacent to, the range or slide-in. Do **not** use the oven as a storage area. While using the range or slide-in, frequently check the temperature of contents within the cabinet areas above the range or slide-in.
- To avoid a carbon monoxide poisoning hazard, do **not** cover the oven vent openings while the oven is in operation. Do **not** cover the ventilation holes in the oven broiler shelf (above oven burner) or cooking times will vary from normal and food may become burned or undercooked.
- Do **not** operate the range or slide-in if it is damaged or not working properly.
- Do **not** touch burners, burner grates, areas near burners, inner surfaces of the oven, the oven door, the wire rack, or any utensils inside the oven, during and after use, as burns may occur. Do **not** let clothing or other flammable materials contact these areas until they have had sufficient time to cool, as they may ignite.
- Never leave burners unattended when in use, as pan contents may boil over, resulting in smoke or a grease spill that may ignite.
- Because grease is flammable, never allow grease to collect around top burners or on the range or slide-in surface. Wipe up any grease spills immediately. Never use water on grease fires, and never pick up a flaming pan. Smother a flaming pan with a tight-fitting lid or cookie sheet. Flaming grease outside of the pan can be extinguished with baking soda or a multipurpose dry chemical or foam-type fire extinguisher.
- Do **not** heat unopened containers as they could explode.
- Use pans that are large enough to cover the burner area and contain the cooked food but that do not exceed 10" in size. This will reduce or eliminate heavy splattering or spills that can ignite and cause an explosion or burns and any excessive heat build-up that would result in damage to the range or slide-in top.
- Turn pan handles inward, but not over other burners. This reduces the chance of burns due to bumping a pan.
- Do **not** drop pans on the porcelain surface. Cracks or chips in the porcelain surface may result.
- Be sure that all cooking utensils are safe for use on the range or slide-in surface. Only certain kinds of utensils are suitable for surface or burner use without breaking due to sudden changes in temperature. Do **not** adjust the burner flames to extend beyond the edge of the cooking utensil or the flame could cause burns or poor cooking results.
- Use only dry potholders as moist or damp potholders on hot surfaces may result in steam burns. Do **not** let the potholder touch an open flame or use a towel or bulky cloth for a potholder as fire could result.
- Control knobs **must** be turned off when not cooking. Fire and/or a burning hazard my occur if a burner is accidentally left on.
- Do **not** apply excessive weight against the range or slide-in door, as it could spring the hinges; in this event, any such damage would not be covered under warranty.

6.2 Preparing The Range Or Slide-In For Use

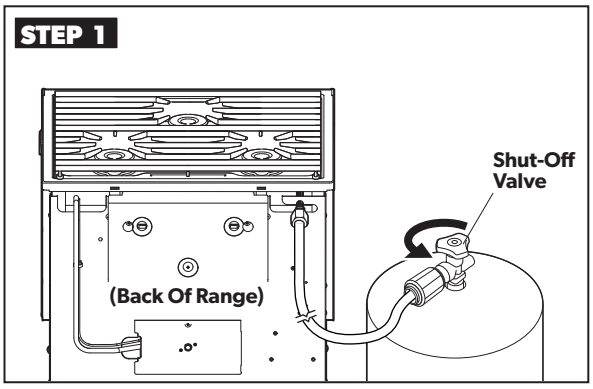

- Turn the gas on at the shut-off valve.

If your unit is equipped with a bi-fold cover, raise the cover before using the range or slide-in.

6.3 Using The Range Top Or Slide-In

All burner controls operate counterclockwise and must be pressed inward when turning to light.

Lighting The Burners

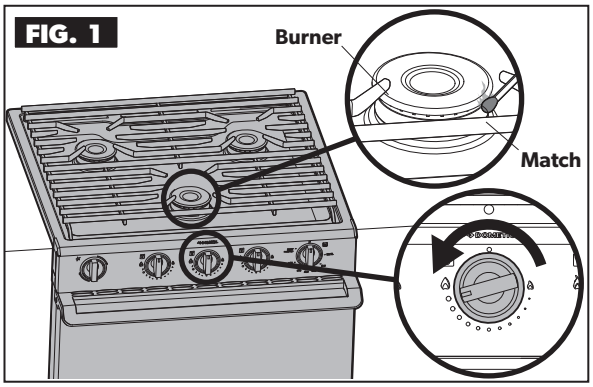

- To light the burner with a match, turn the knob approximately 90° until it points to the large flame decal.
- Hold a lit match near the burner to ignite the flame.

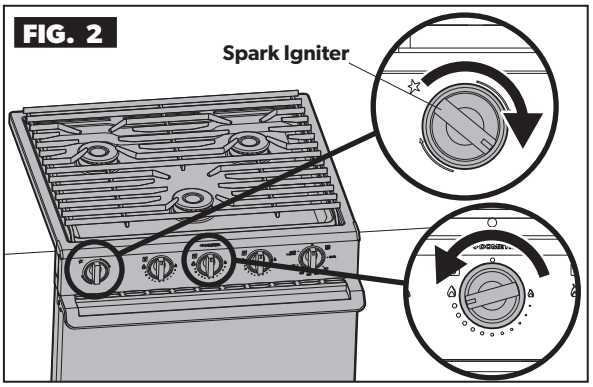

- To light the burner using a spark igniter, turn the knob approximately 90° until it points to the large flame decal.
- Turn the spark igniter knob clockwise until it clicks. Continue turning the knob until the burner ignites.

Extinguishing The Burner Flame

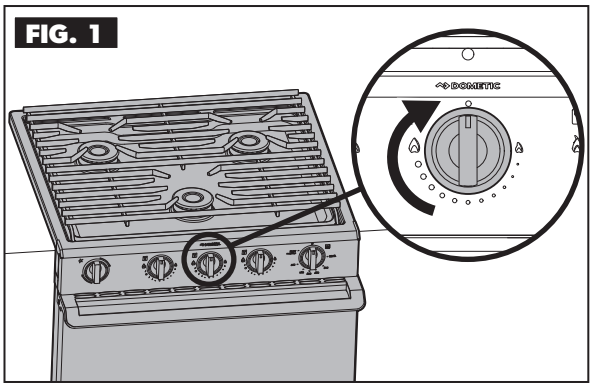

- Turn the knob clockwise until it points to the solid circle at the top of the knob.

Range Or Slide-In Knob Settings

Setting	Recommended Use
	• Light the burner • Start food cooking • Bring liquids to a boil
	• Hold liquids at a boil • Cook food at different temperature levels
	• Keep food warm
●	• Turn the burner off

After top burners have been on for a period of time, a popping sound may occur when the burner is turned off. This is normal and does not create a safety hazard.

6.4 Using The Oven

Setting The Oven Pilot

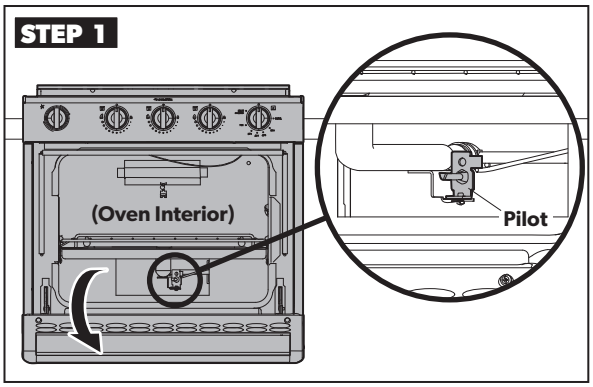

- Push in and rotate the oven control knob until it points to **pilot - push/hold**.
- Push in and hold the knob while holding a lit match under the oven pilot located at the back of the oven, under the broiler shelf.
- Release knob and verify that the pilot stays lit. Repeat the process if the pilot does not stay lit.
- The oven pilot has been factory set and requires no further adjustment.
- To extinguish the oven pilot, push in the oven control knob and rotate clockwise to off.

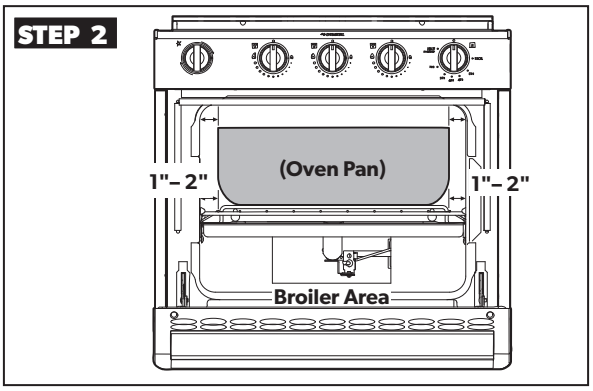

- Place the food to be baked in the center of the oven allowing 1"–2" space from the oven walls on all sides of the container

Cooking times will be longer at higher attitudes (+4000 feet).

Oven Knob Settings

Setting	Recommended Use
Pilot Push/Hold	• Starting point for lighting the oven pilot • Keeps the oven pilot lit for continued use of the oven
Broil	• Sets the oven temperature to broil
300–500	• Sets the oven to a particular temperature
●	• Turns the oven pilot off

7 MAINTENANCE

⚠ WARNING BURN, FIRE, EXPLOSION, AND/OR CARBON MONOXIDE HAZARD. Failure to obey the following warnings could result in damage, a burn hazard, possible explosion, carbon monoxide buildup, serious injury, or death:

- Keep range or slide-in top area clear of combustible cleaning materials, gasoline, and other flammable vapors and liquids.
- Do **not** obstruct the flow of combustion and ventilation air.
- Leak testing shall be conducted according to the manufacturer's instructions.
- Make sure all controls are OFF and the range or slide-in surfaces, burner grates, burners, and oven surfaces are cool before cleaning or disassembling the range or slide-in.
- Do **not** use oven cleaners, bleach, or rust removers on the range or slide-in top or burner grates.
- Clean oven with oven cleaner only. Follow directions on the cleaning product container.
- Never use a wire brush or metallic item for cleaning burner ports or orifices. Brush may "shed" bristles, that may lodge in the orifice or burner ports and cause a fire or explosion.

⚠ CAUTION BURN AND/OR DAMAGE HAZARD. Failure to obey the following cautions could result in damage or injury:

- Clean all surfaces as soon as possible after boil overs or spillovers. Do **not** allow foods containing acids (such as lemon juice, tomato juice, or vinegar) to remain on porcelain or painted surfaces. Acids may remove the glossy finish. Pitting and discoloration will result if spills are allowed to remain for any length of time on stainless steel. Do **not** allow spills to remain on burner caps. Caps could be permanently stained if spills are not cleaned up promptly.
- Do **not** use steel wool, or abrasive cleaners, or acid type cleaners such as chlorine bleach on your range top, slide-in, or grate systems. They will damage your range or slide-in. Use only non-abrasive plastic scrubbing pads.
- Do **not** use abrasive cleaning materials, oven cleaner, or harsh chemicals on the control panel as these may damage or remove the operating instructions printed on the front of the unit.
- The grate and surface of the cook top is covered with porcelain coating. Porcelain is a glass/ceramic coating glazed to the surface of the metal. Porcelain is designed to provide a surface that can withstand high temperatures and maintain an attractive appearance and make it easier to clean. Do **not** wash warm porcelain surfaces. Allow these areas to cool before cleaning. Burns can occur or the porcelain could crack.
- When cleaning around the burners, use care to prevent damage to the electrode (if so equipped). If a sponge or cloth should catch the metal igniter electrode, it could damage or break the electrode. If this occurs, the burner will not light.
- Use warm soapy water only to clean the burner grates, burner box, painted surfaces, porcelain surfaces, stainless steel surfaces, and plastic items on your range top or slide-in. Do **not** use gritty or acid-type cleaners. Do **not** use steel wool or abrasive cleaners, as they will damage your range top or slide-in. Use only non-abrasive plastic scrubbing pads.

Proper installation and care will help keep your range or slide-in operating properly. Most cleaning can be performed using normal household items.

7.1 Checking The Burner Flames And Oven Pilot

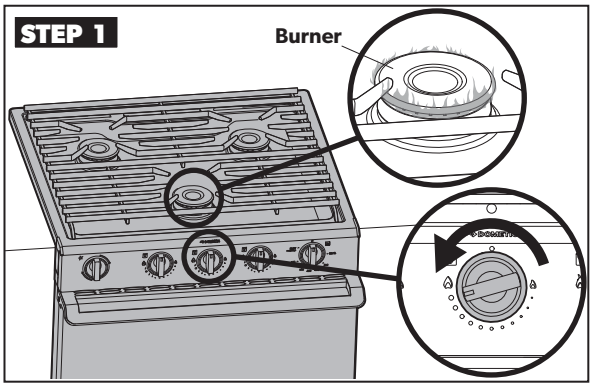

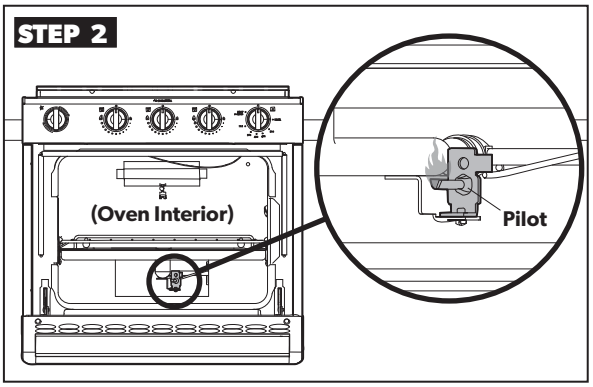

- Light the burners, one at a time. Refer to "Lighting The Burners" on page 9, for more information.
- Confirm that the burner flame is present and adjusts when the control knob is turned.

- Light the oven pilot. Refer to "Setting The Oven Pilot" on page 10, for more information.
- Confirm the pilot flame is present.

7.2 Cleaning The Range Or Slide-In

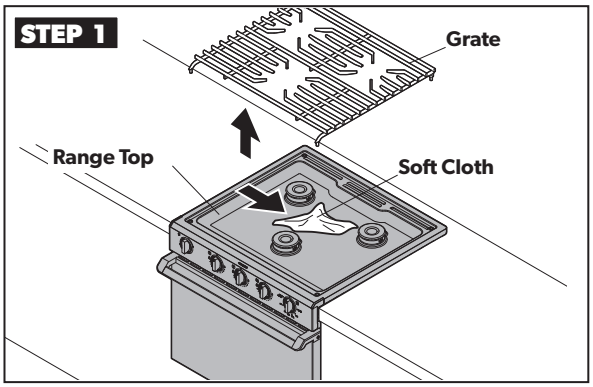

Cleaning the range top or slide-in:

- Remove the grate.
- Clean with warm, soapy water.
- Rinse with clean water.
- Dry with soft cloth.

Heavy burned on soil may require repeated cleaning steps until the soil is completely removed.

Additional Cleaning Methods

Item	Cleaning Method
Control knobs	Pull the knobs straight off of the stems to clean. Use a mild liquid cleaner or glass cleaner.
Control Panel	Use a spray glass cleaner, applying the cleaner to a paper towel. Do not spray glass cleaner directly on the panel. Do not use oven cleaner on the control panel.
Range Top Surface	Use a mild liquid cleaner or glass cleaner.
Surface Burner Grates	Clean area as soon as it becomes dirty. Use a non-abrasive, plastic, scrubbing pad, as necessary.
Surface Burners, Burner Ports, or Orifices	If clogged, gently brush perforated areas with a lightweight brush (toothbrush) or carefully clean the holes out using a toothpick.
Oven	Use warm, soapy water. For heavy soil, use an oven-cleaning spray and follow the manufacturer directions on the label. Use a non-abrasive, plastic, scrubbing pad, as necessary.

8 STORAGE

8.1 Preparing The Range Or Slide-In For Storage

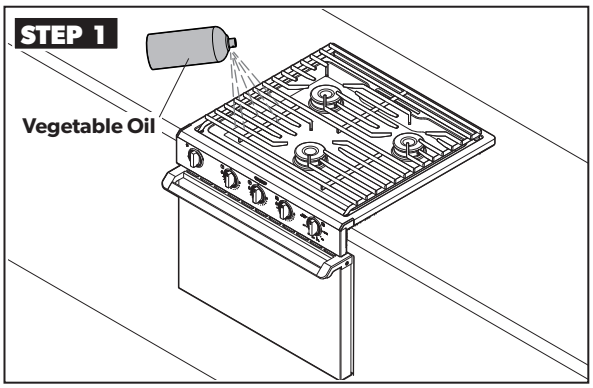

- Dry all surfaces.
- Spray surfaces with vegetable oil or a similar product to prevent rust during storage.
- Clean oil off the surface of the range or slide-in before reinstalling and operating.

9 DISPOSAL

- Place packaging material only in the appropriate recycling waste bins, whenever possible. Do not dispose of the range or slide-in without consulting a local recycling center or specialist dealer for details about how to dispose of the range or slide-in in accordance with the applicable national and local regulations.

10 REPLACEMENT PARTS

For the most current parts information, visit www.dometic.com.

DOMETIC

LIMITED TWO-YEAR WARRANTY (DOMETIC COOKTOPS, RANGES, AND SLIDE-INS)

THE SELLER NAMED BELOW MAKES THE FOLLOWING WARRANTY WITH RESPECT TO THE DOMETIC PRODUCT:

1. This Warranty is made only to the first purchaser (hereinafter referred to as the "Original Purchaser"), who acquires the Dometic Product for his or her own use and when the Dometic Product is installed and operated within the continental United States and Canada.
2. WARRANTY PERIOD: This Warranty will be in effect for two (2) years from the date of purchase by the Original Purchaser. The Original Purchaser should retain a copy of the dated bill of sale as evidence of the date of purchase.
3. WARRANTY: This Warranty covers labor, specified parts, and freight. The Dometic Product shall be free from defects in material and workmanship at the time of sale and under normal use. All Dometic Products (except those specifically built for commercial use) are warranted only when installed per the Seller's installation instructions on vehicles built to R.V.I.A. A119-2 and C.R.V.A. Z-240 Standards. This Warranty does NOT cover conditions unrelated to the material and workmanship of the Dometic Product. Such unrelated conditions include, but are not limited to: (a) damage not reported within 10 days of ownership; (b) failure or damage caused by storms, rain, lightning, or any acts of God; (c) faulty installation or installation that does not comply with the Seller's instructions or R.V.I.A. and C.R.V.A. standards, and any damage resulting from such; (d) damage or failure caused by installation of accessories not manufactured and marketed by the Seller or any non-Dometic parts that are installed as replacement parts; (e) the need for normal maintenance and any damage resulting from the failure to provide such maintenance; (f) failure to follow Seller's instructions for use of this Dometic Product; (g) any accident to, or misuse of, any part of the Dometic Product and any alteration by anyone other than the Seller or its authorized representative; (h) cosmetic issues caused during installation; (i) normal wear, including scratches or dents; and (j) Dometic Product abuse, including but not limited to damage caused by leaning on the Dometic Product door, the usage of oversized or overweight pots and pans, and cleaning with harsh chemicals.
4. WARRANTY COVERS DOMETIC COMPONENT PARTS: All Dometic component parts are covered under this Limited Warranty.
5. WARRANTY REMEDY: In order to obtain the benefits of this Warranty, the Original Purchaser has the following two options during the WARRANTY PERIOD:
   a. Preferred option: Deliver the Dometic Product for inspection to the nearest Authorized Dometic Service Center during the Warranty Period. To obtain the location of the nearest Authorized Dometic Service Center, refer to https://www.dometic.com/en-us/us/find-a-dealer. The Authorized Dometic Service Center will work with the Seller to obtain Warranty coverage if a Seller defect is identified. CONFIRM THE SERVICE CENTER IS AN AUTHORIZED DOMETIC SERVICE CENTER. DO NOT PAY THE SERVICE CENTER FOR WARRANTY REPAIRS.
   b. Second option: If it is not feasible under the circumstances to deliver the Dometic Product to an Authorized Dometic Service Center, please call 1-800-544-4881 for additional Warranty assistance. Seller prefers option a. first and only option b. if option a. is determined not to be feasible under the circumstances.
6. Any item returned in the manner described in paragraph 5 will be examined by the Authorized Dometic Service Center. If it is found that the returned item was defective in material and workmanship at the time of sale, the Authorized Dometic Service Center will contact the Seller for Warranty coverage. The Seller shall, at Dometic's sole option, repair or replace the Dometic Product, or refund Original Purchaser's purchase price. If the Seller determines that repairs to the Dometic Product are to be made, then only authorized Dometic parts will be used.
7. The Seller does not authorize any person or company to create any Warranty obligations or liability on its behalf. This Warranty is not extended by the length of time which you are deprived of the use of the Dometic Product.
8. **IN NO EVENT SHALL SELLER BE LIABLE FOR EITHER INCIDENTAL OR CONSEQUENTIAL DAMAGES. THIS INCLUDES ANY DAMAGE TO ANOTHER PRODUCT OR PRODUCTS RESULTING FROM SUCH A DEFECT. SOME STATES DO NOT ALLOW THE EXCLUSION OR LIMITATION OF INCIDENTAL OR CONSEQUENTIAL DAMAGES, SO THE ABOVE LIMITATIONS MAY NOT APPLY TO YOU.**
9. **ANY IMPLIED WARRANTY, INCLUDING THE IMPLIED WARRANTY OF MERCHANTABILITY AND FITNESS FOR ANY PURPOSE, IS LIMITED TO THE DURATION OF THIS LIMITED WARRANTY. SOME STATES DO NOT ALLOW LIMITATIONS ON HOW LONG AN IMPLIED WARRANTY LASTS, SO THE ABOVE LIMITATION MAY NOT APPLY TO YOU.**
10. **THIS WARRANTY GIVES SPECIFIC LEGAL RIGHTS, YOU MAY ALSO HAVE OTHER RIGHTS WHICH VARY FROM STATE TO STATE.** No action to enforce this Warranty shall be commenced later than ninety (90) days after the expiration of the Warranty Period. Claims must be submitted in writing to the Dometic Warranty Department.
11. The Seller reserves the right to change the design of any Dometic product without notice and with no obligation to make corresponding changes in Dometic products previously manufactured.

PROTECTION FOR YOUR NEW INVESTMENT
We appreciate that you have chosen to purchase a Dometic product for your recreational vehicle and we want to help you protect this wise investment. We at Dometic, back our products with one of the most comprehensive warranties in the industry.
Register your product online at: www.eDometic.com.

Dometic Corporation
Warranty Department
1120 North Main Street
Elkhart, Indiana 46514
1-574-294-2511
Register Your Product @
www.eDometic.com

Form No. 50507 (10/17)
(French 50508_PR)
©2017 Dometic Corporation
LaGrange, IN 46761