DOMETIC

INSTALLATION & OPERATING INSTRUCTIONS

CE

FOR YOUR SAFETY

If you smell gas:

1. Open windows and door.
2. Don’t touch electrical switches.
3. Extinguish any open flame.
4. Immediately call your gas supplier.

FOR YOUR SAFETY

Do not store or use gasoline or other flammable vapors and liquids in the vicinity of this or any other appliance.

⚠ WARNING

Improper installation, adjustment, alteration, service or maintenance can cause injury or property damage. Refer to this manual. For assistance or additional information consult a qualified installer, service agency or the gas supplier.

⚠ WARNING

If the refrigerator stops cooling - or - if it emits an ammonia smell, immediately turn the refrigerator off and contact a Service Center.

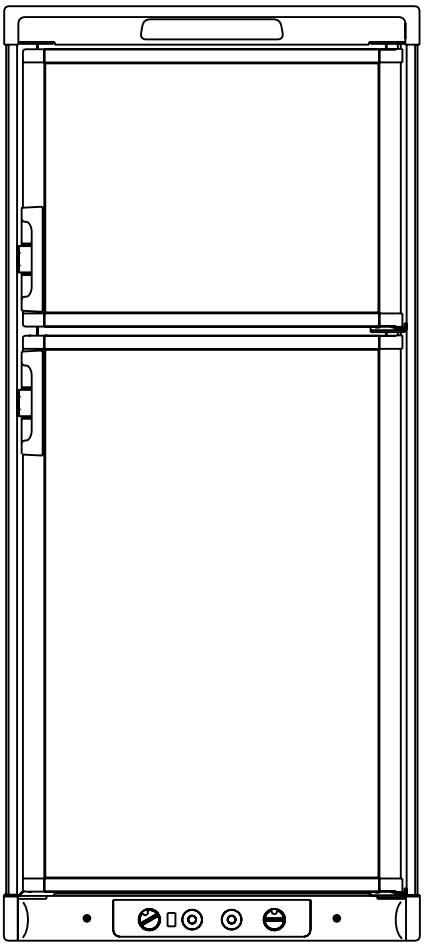

RM4601

REVISION A
Form No. 3313941.000 09/16

INTRODUCTION

We are pleased that you have chosen this refrigerator and hope you will derive much satisfaction from using it.
The refrigerator is designed for installation into motor homes and caravans and is intended for storage of foods, frozen foods and making ice.
Read this manual very carefully before using the refrigerator. Make sure to retain it for future reference. In this manual you will find information on how to install, operate and maintain your new appliance. To ensure good refrigeration and economical operation, the refrigerator has to be installed and used as described in these instructions.
The installation must be performed by an authorized person and in accordance with the manufacturers installation instructions, local gas fitting regulations, municipal building codes, electrical wiring regulations, AS5601 “Gas Installations” and any other statutory regulations.

TRANSIT DAMAGE

Before you install your refrigerator, ensure to remove all protective packaging. Check for any damage or marks. Transit damage must be reported to whoever is responsible for delivery not later than seven days after the refrigerator was delivered.

DATA PLATE

Check the data plate, inside the refrigerator, to ensure that you have received the right model and that it is suitable for the available gas supply and pressure.

The right test point gas pressure is..... 2.72 kPa
The right voltage is .... 230 - 240 volts
The right gas consumption is ..... 1.7 MJ/h

The data plate contains e. g. the following details:

Model designation RM4601

Product number .....

Serial number .....

Voltage ..... volts

Gas pressure ..... kPa

Since these details will be needed if you have to contact service personal, it is a good idea to make a note of them here.

CONTENTS

OPERATING INSTRUCTIONS _____ 3

- CONTROLS 3
- STARTING THE REFRIGERATOR 3
- LP GAS OPERATION 3
- 230-240V OPERATION 4
- 12V OPERATION. 4
- REGULATING THE TEMPERATURE 4
- TRAVEL CATCH 4
- USING THE REFRIGERATOR 4
- DEFROSTING 4
- CLEANING THE REFRIGERATOR. 4
- AIRING POSITION CARD 5
- TURNING OFF THE REFRIGERATOR. 5
- PRODUCT CARE - SOME USEFUL HINTS 5
- TROUBLESHOOTING. 5
- MAINTENANCE. 6
- SERVICE AND SPARE PARTS. 6

INSTALLATION INSTRUCTIONS_____ 6

- GENERAL INFORMATION 6
- VENTILATION OF THE UNIT 6
- TECHNICAL DATA 7
- BUILDING-IN 8
- SECURING THE REFRIGERATOR. 8
- DRAIN WATER HOSE 9
- CONNECTIONS. 9
- MOUNTING INSTRUCTIONS 10
- REMOVING AND REPLACING THE SHELVES . . 11
- APPENDIX A - WIRING DIAGRAM. 12

SYMBOLS

The following symbols are used throughout this manual:

This is the safety alert symbol. It is used to alert you to personal injury hazards. Obey all safety messages that follow this symbol to avoid possible injury or death.

⚠ WARNING

WARNING indicates a hazardous situation which, if not avoided, could result in death or serious injury.

⚠ CAUTION

CAUTION, used with the safety alert symbol, indicates a hazardous situation which, if not avoided, could result in minor or moderate injury.

NOTICE

NOTICE is used to address practices not related to personal injury.

Information

Step-by-step instructions

OPERATING INSTRUCTIONS

CONTROLS

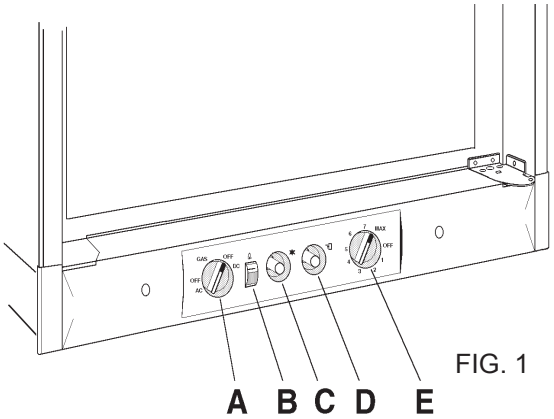

FIG. 1

The refrigerator can be run on 230-240V, 12V or LP gas. Changing between these modes of operation is carried out by means of the control buttons positioned as shown in Fig. 1.
The energy selector (**A**) can be set at either “AC” (230-240V), “DC” (12V), “GAS” (LP gas) or “OFF”.
A flame indicator (**B**) at the control panel shows if the gas flame is lit. The gas is lit when the red indicator is in the green field.
A manual piezo-electric igniter is used. When the button (**C**) is pushed, sparks are generated at the burner.
The refrigerator is fitted with a safety device that automatically shuts off the supply of gas if the flame goes out. The safety device can be operated manually by pressing the button (**D**).
The refrigerator temperature is controlled by a thermostat (**E**) when the refrigerator runs on 230-240V and LP gas. Please note that the thermostat has no “off” position when the refrigerator runs on LP gas.

STARTING THE REFRIGERATOR

⚠ WARNING

While mobile:

- **Do not operate the refrigerator on LP gas.**
- **Turn off the gas bottle.**

LP GAS OPERATION

After initial installation, servicing, or changing gas cylinders etc., the gas line is likely to be filled with air. You may have to repeat the lighting procedure several times to purge the air out of the gas lines.
To start gas operation:

1. Open the shut off valve of the gas bottle. Check that there is enough gas. Open any on-board shut-off valve.
2. Set the thermostat knob (**E**) to the highest setting.
3. Turn the energy selector (**A**) to position “GAS”.

4. Press button (**D**) all the way in and hold, press button (**C**) for the piezo igniter several times to light the burner. This can be observed on the flame indicator (**B**), on the refrigerator. When the flame is on, the red indicator is in the green field.
5. After the gas is lit keep button (**D**) pressed for 10 seconds. Release the button (**D**) and check that the RED indicator is in the GREEN field. If the burner goes out, repeat the lighting procedure.
6. To shut off the refrigerator, turn knob (**A**) to "OFF" position.

230-240V OPERATION

Before operating the refrigerator, check that the voltage stated on the data plate is the same as the main voltage in use.

1. Turn thermostat knob (**E**) to its highest (coldest) position.
2. Set energy selector (**A**) to position "AC".
3. To shut off the refrigerator, turn knob (**A**) to "OFF" position.

12V OPERATION

Only operate your refrigerator on 12V when the engine of the vehicle is running - otherwise your battery will soon be discharged.

1. Set the energy selector (**A**) to position "DC".
2. Note! There is no thermostat function on 12V operation, the refrigerator works continuously.
3. To shut off the refrigerator, turn the knob (**A**) to "OFF" position.

REGULATING THE TEMPERATURE

The position number refers to fig.1.
It will take a few hours for the refrigerator to reach normal operating temperature. So we suggest you start it well in advance of a trip and if possible store it with precooled foodstuffs.
On 230-240V operation and LP gas operation the refrigerator is controlled by a thermostat and the thermostat knob (**E**) should be set at 3-5. If a lower (colder) temperature is desired set the thermostat to a higher figure.
On 12V operation the refrigerator works continuously.

TRAVEL CATCH

Make sure that the travel catch is engaged when the motor home / caravan is on the move.

USING THE REFRIGERATOR

⚠ WARNING

DO NOT store explosive substances in the refrigerator, such as cigarette lighter gas, gasoline, ether or the like.

FOOD STORAGE

Always keep food in closed containers. Never put hot food in the refrigerator; allow it to cool first.
The frozen food compartment is intended for the storage of frozen food and for making ice. Most kinds of frozen food can be stored in the frozen food compartment for about a month. This period of time may vary, however, and it is important to follow the instructions on the individual packages.

ICE MAKING

Fill the ice tray to just below the brim with drinking water and place them on the bottom of the freezer compartment. Ice will be made more rapidly if the thermostat is set at its highest position (biggest circle), but be sure to move the thermostat back to normal setting when the ice is formed; the refrigerator might otherwise become too cold.

DEFROSTING

Frost will gradually accumulate on the refrigerating surfaces. Each time the door is opened some of the cold air in the refrigerator spills out and is replaced by warm moist room air. As this air is cooled, the moisture is deposited onto the evaporator coils or other cold surfaces inside the refrigerator and can cause frost build-up.
It is important that you do not leave the unit's door open any longer than necessary. This will reduce frost formation and increase the efficiency of your refrigerator.
The frost must not be allowed to grow too thick as it acts as an insulator and adversely affects refrigerator performance. Check the formation of frost regularly every week and when it gets about 3 mm thick, defrost the refrigerator.
Do not try to accelerate defrosting by using any kind of heating appliance, as this might damage the plastic surfaces of the refrigerator. Neither should any sharp objects be used to scrape off the ice.

CLEANING THE REFRIGERATOR

Clean the inside of the refrigerator regularly to keep it fresh and hygienic.
Never use detergents, scouring powder, strongly scented products or wax polish to clean the interior of the refrigerator as they may damage the surfaces and leave a strong odor.

Soak a cloth in a solution consisting of a teaspoon of bicarbonate of soda to half a litre of warm water. Wring out the cloth and use it to clean the interior of the refrigerator and its fittings.

AIRING POSITION CARD

Use the **Airing Position Card** to keep the doors ajar if the refrigerator will not be in use for an extended period of time or put in storage.

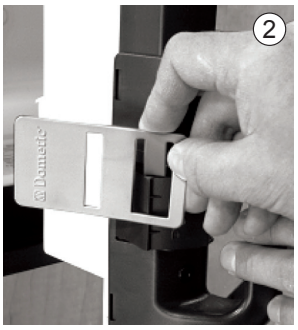

The exterior of the refrigerator should be wiped clean now and then, using a damp cloth and a small quantity of detergent. But not the door gasket, which should only be cleaned with soap and water and then thoroughly dried. The cooling unit behind the refrigerator should be cleaned with a brush from time to time. Make sure that the refrigerator is switched off when doing this!

TURNING OFF THE REFRIGERATOR

☞ To turn off the refrigerator, turn knob (**A**) to “OFF” position.

If the refrigerator is not to be used for some time:

☞
1. Turn knob (**A**) to “OFF” position.
2. Shut off any on-board valve in the gas line to the refrigerator.
3. Empty the refrigerator.
4. Defrost and clean it as described in sections “DEFROSTING” and “CLEANING THE REFRIGERATOR”.
5. Leave the doors ajar.

PRODUCT CARE - SOME USEFUL HINTS

Make sure that:
- The refrigerator is not operating on 12V when the vehicle is parked; otherwise you will drain the car battery in a short time.
- Defrosting is carried out periodically.
- The refrigerator is clean and dry with the door left open when it is not to be used for some time.
- Liquids or items with a strong odor are well packed.
- The ventilation openings are unobstructed.
- The door is secured by means of the travel catch when the motor home / caravan is on the move.

TROUBLESHOOTING

IF THE REFRIGERATOR FAILS TO WORK

Check the following points before calling a service technician:
- The “STARTING THE REFRIGERATOR” instructions have been followed.
- The refrigerator is level.
- If it is possible to start the refrigerator on any of the connected sources of energy.
- If the refrigerator fails to work on gas, check:
  - That the gas bottle is not empty.
  - That all LP-gas valves are open.
- If the refrigerator fails to work on 12V, check:
  - That the 12V supply is connected to the refrigerator.
  - That the fuse on the 12V supply is intact.
  - That the battery is not run down.
- If the refrigerator fails to work on 230-240V, check:
  - That the 230-240V supply is connected to the refrigerator.
  - That the fuse is intact.

If the refrigerator is not cooling sufficiently, the reason may be:

- Inadequate ventilation of the cooling unit due to the intake and/or exhaust air vents being partly or completely blocked.
- The evaporator is frosted up.
- The thermostat setting is incorrect.
- Gas pressure is incorrect - please check the pressure-regulator on the gas container.
- The refrigerator is not level.
- Too much food is loaded at one time.
- The door is not properly closed or the magnetic sealing strip is defective.

If the refrigerator still does not work properly, call a service technician.

⚠ WARNING

The sealed cooling system must not be opened, since it contains corroding chemicals under high pressure.

MAINTENANCE

- This appliance must be serviced by an authorized person. We recommend that an authorized service technician checks the refrigerator once a year.
- The “Installation and operating instructions manual” should always be available.
- Ensure that the gas safety shut-off valve is working properly.
- Make sure that the ventilation openings are unobstructed.
- See to it that the burner is clean and free from combustible material.

SERVICE AND SPARE PARTS

Service and spare parts are obtainable from your dealer or Dometic - consult the telephone directory.

INSTALLATION INSTRUCTIONS

GENERAL INFORMATION

The refrigerator is intended for installation in a motor home / caravan, and the information relates to this application. A correct installation is important for correct operation of the appliance.
The refrigerator must be installed on a solid floor and must be level. With the vehicle carefully leveled, the refrigerator should be level both ways in the freezer compartment.
Free air circulation over the fins of the cooling unit is essential.

VENTILATION OF THE UNIT

VENTILATION GRILLES

We recommend fitting the Dometic ventilation systems, which are specially developed by Dometic for this purpose. The Dometic ventilation grilles permit inspection and small repairs to be carried out without the necessity of removing the refrigerator from the recess.
If there is no outer grille at floor level where leaking gas can escape, a 40 mm hole to the outside should be made in the floor of the recess to drain any unburned gas to the outside. Fit the hole with wire mesh and an angled plate to protect it from stones, mud etc.

SIDE VENTILATION (OPTION ONE)

The refrigerator unit is ventilated via two openings in the wall of the motorhome / caravan. Fresh air enters through the lower opening and warm air is discharged through the upper one. Exhaust gases must be vented through the wall to the outside of the vehicle. Dometic wall venting systems provide provision for venting the exhaust gases. Consult your Dometic representative for further information.
The lower opening should be located at floor level (to allow any leaking gas to escape to the outside). The upper ventilation opening should be located above the condenser, as high as possible, to ensure good ventilation. We recommend Dometic ventilation kits.

ROOF VENTILATION (OPTION TWO)

The ventilation of the cooling unit can also be done via one opening in the wall of the motor home and one on the roof for the roof vent.
Fresh air enters through the lower opening and warm air is discharged through the roof vent. The lower opening should be located at floor level (to allow any leaking gas to escape to the outside). We recommend the Dometic motor home wall and roof top ventilation system.

REMOVAL OF FLUE GASES

The ventilation passage at the rear of the recess, between the outer wall of the vehicle and the refrigerator must be sealed off against the living space, so cold draughts are excluded (winter camping) **and no flue gases can penetrate into the living space of the vehicle.**
The flue gases can be dispersed from the ventilation passage using one of the **OPTIONAL** Dometic ventilation systems. The top, bottom and sides of the ventilation passage should be insulated to prevent condensation and cold draughts. The ventilation passage walls must be constructed of a non combustible material.

VENTILATION HEIGHTS

MINIMUM VENTILATION HEIGHTS IN MM	
Installation with upper and lower side vent	Installation with roof vent and lower side vent
1417	1577

At extreme ambient temperatures the refrigeration unit will only perform adequately when properly ventilated.

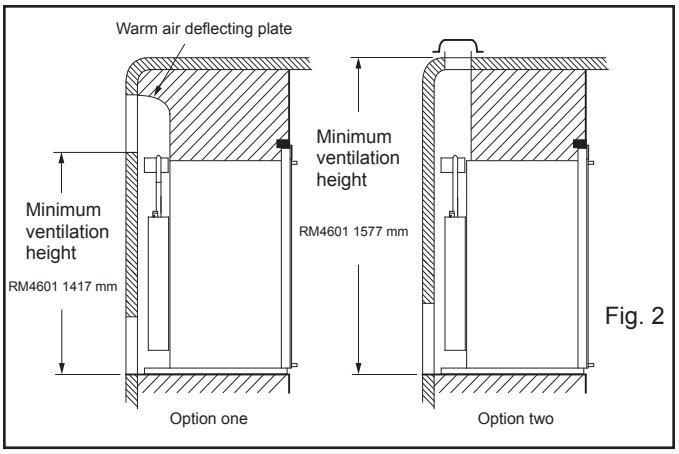

Fig. 2

For alternate ventilation heights and vent configurations consult your Dometic representative.

TECHNICAL DATA

Overall dimensions, refrigerator
Height (incl. controls) . . . . . 1427 mm
Width . . . . . 632 mm
Depth (incl. handle) . . . . . 668 mm
Recess dimensions
Height. . . . . 1415 mm
Width . . . . . 607 mm
Depth . . . . . 620 mm
Capacity
Gross . . . . . 186 litres
Net . . . . . 171 litres
Frozen food compartment . . . . . 47 litres
Weight (without packaging) . . . . . 61.5 kg
Electrical data
Input 230-240 volt . . . . . 325 watt
12 volt . . . . . 275 watt
Energy consumption (in 24h) . . . . . 4.6 kWh
LP gas data
Input, max . . . . . 1.7 MJ/h
Energy consumption (in 24h) . . . . . 440 g
Cooling medium: Ammonia
Sodium chromate is used for corrosion protection (less than 2 weight % of the coolant).

CLEARANCES

Minimum clearances (mm) to combustible materials		
		(Fig. 3 & Fig. 4)
G	Top	0
K	Side	0
L	Bottom	0
M[1]	Rear	0

[1] *The distance between the rearmost part of the refrigerator and the wall behind the refrigerator.*

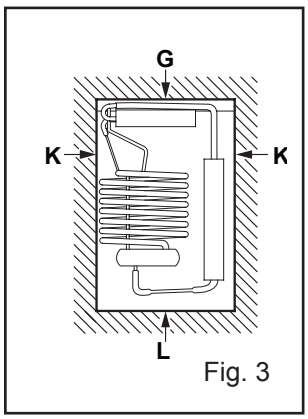

Fig. 3

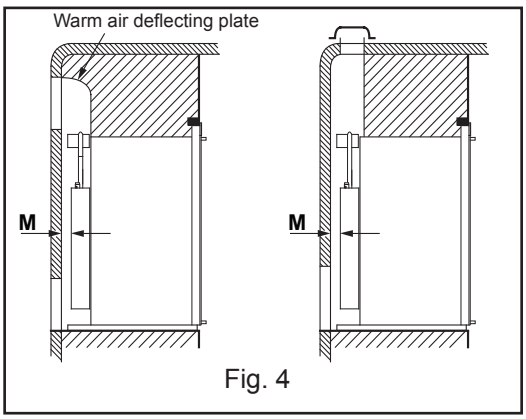

Fig. 4

BUILDING-IN

The refrigerator must not be exposed to radiated heat from hot objects.
It is not a good practice to install the refrigerator so that the vent openings are covered by the vehicle's entrance door when this is set open. This would reduce the ventilation airflow to the cooling unit and reduce refrigeration performance.
The refrigerator has to be installed in a substantial enclosure and must be level. For information about dimensions, see "TECHNICAL DATA".
The bottom of the enclosure must be horizontal and even so that the refrigerator can be easily pushed into place. It must be sturdy enough to carry the weight of the refrigerator.
Make sure that there is a complete seal between the front frame of the refrigerator and top, sides and bottom of the enclosure.
Push the refrigerator into the recess until the sealing strip on the flange seals against the front of the recess, so that the cooling unit is completely sealed off against the interior of the motor home / caravan.
Note! Be careful not to damage the sealing strip when the refrigerator is put in place.

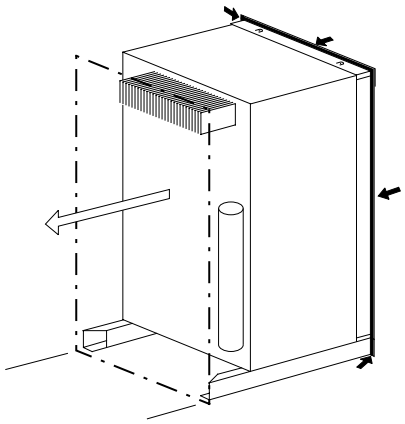

FIG. 5

A wood strip must be in place across the upper opening of the enclosure. The top frame of the refrigerator will be anchored to the wood strip with screws.
When two side vents are used, a suitable warm air deflecting plate should be fitted from the top of the cabinet to the top of the wall vent.
This will direct warm air rising from the cooling unit to the outside. Care must be taken to insure the warm air deflecting plate can not damage wires or tubes on top of the refrigerator cabinet.

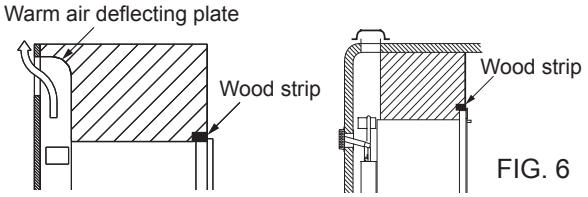

FIG. 6

SECURING THE REFRIGERATOR

For the best cooling performance the installer must block any space between the counter, storage area or ceiling and top of the refrigerator greater than 40 mm.
Otherwise the heat will become trapped in this space, making the top of the refrigerator hot, thus reducing the efficiency of the unit.
After the refrigerator is put in place, insuring a combustion seal at the front frame, the refrigerator is to be secured in the enclosure with screws. (These screws are not included.)
Failure to follow the sequence in securing the refrigerator in enclosure can cause leakage between the frame and cabinet.

The five screws have to be installed in the following order:

1. Two screws installed through the front base.
   a) Secure the refrigerator to the floor with two screws: One screw through the hinge and into the floor, and on the opposite side one screw through the front base, see fig. 7.

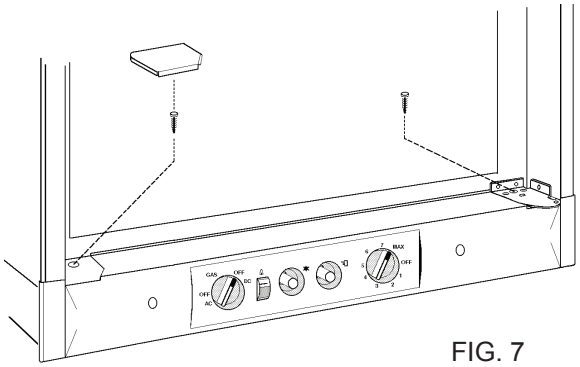

FIG. 7

   b) A cover plate (shipped as a loose part) is to be attached after the refrigerator is secured in the enclosure.
2. Two screws installed in the top frame.
   a) The top decoration panel must be removed from the refrigerator before the screws can be installed. Open the upper door and gently push the tabs out of the hole in the hinge (both sides) with a flat blade screwdriver.
   b) Carefully tilt the top decoration panel and lift up to remove from top frame, see fig. 8.
   c) Install the two screws in the top frame, the holes are accessible from underneath.
   d) Seal the opening for the screws with aluminum tape.
   e) Replace the top decoration panel. Make sure the tabs snap back into the holes in the hinge plate.

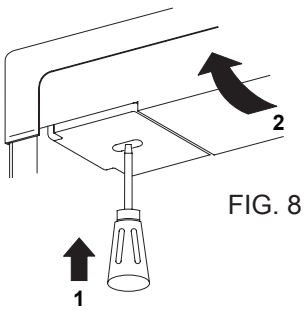

FIG. 8

3. One screw installed in the rear base, see fig. 9. The screw shown on the burner side is an option. It is not required to properly secure the refrigerator in the enclosure.

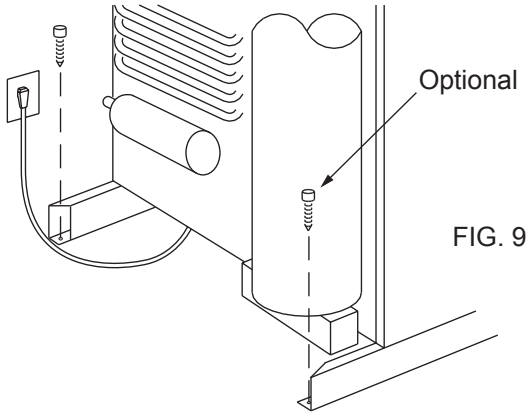

FIG. 9

DRAIN WATER HOSE

A hole must be drilled through flooring, see Fig. 10.
The installer has to make sure that the hose does not kink when run through the floor. Seal around the hose that goes through the drilled hole.
If a longer hose than supplied is required to get the water to drain outside of the vehicle, the installer will have to supply the extra length of hose.

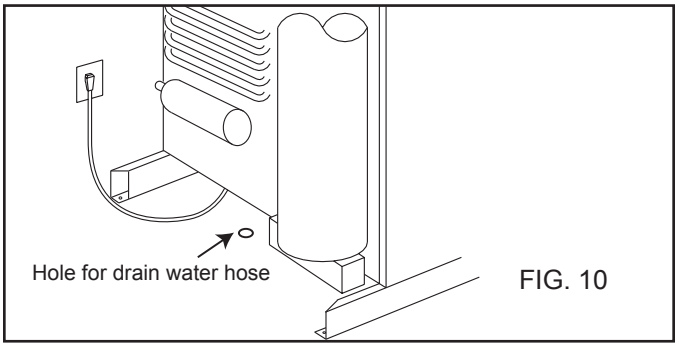

FIG. 10

CONNECTIONS

LP GAS CONNECTION

The refrigerator is designed for operation on LP gas.

The refrigerator is not designed for operation on town gas or natural gas.

The gas supply system must incorporate an approved gas pressure regulator to maintain a supply pressure of 2.72 kPa. The test point pressure must be 2.72 kPa for Propane. Check that this is stated on the data plate.

⚠ CAUTION

Check that the gas supplied to the refrigerator is at the correct pressure. See the reducing valve on the LP gas container.

The gas installation and servicing must be carried out by an authorized person and conform to all relevant local authorities.

The supply pipe should preferable be of copper. If any other material is used, it must be of a type approved for use with continuously operating bottled-gas appliances and have threaded connections throughout. All connectors etc. should be of a type specifically designed for the type and diameter of the connection pipe used, and screwed joints should be sealed with a joining compound approved for use with bottled-gas.
The gas supply pipe should be connected to the gas inlet connection at the rear of the refrigerator by means of a suitable threaded coupling. The connection nipple is furnished with an ISO 7/1 - Rp 1/8 internal pipe thread connection. In making the connection to the refrigerator, a union gas cock of an approved type bottled gas must be incorporated in the supply line in a position that is readily accessible to the user. For eventual servicing purposes, the union should be on the outlet side of the cock and the pipework should be positioned so as not to prevent the refrigerator from being readily withdrawn. All completed connections should be checked for leaks with soapy water. **DO NOT** use an open flame for detecting leaks!
On completion of installation, the system must be pressure tested by a qualified technician.

ELECTRICAL CONNECTION

The electrical installation must be carried out by authorized personnel.

For mains voltage operation, it is important that the circuit to and in the motor home / caravan is effectively earthed.

The refrigerator is equipped with a three-prong (grounding) plug for your protection against shock hazards and should be plugged directly into a properly grounded three-prong receptacle. **DO NOT** cut off or remove the grounding prong from this plug.
If the supply cord is damaged, it must be replaced by the manufacturer, its service agent or similarly qualified persons in order to avoid a hazard.

230-240V SUPPLIES

Check that the voltage stated on the data plate is the same as the main voltage in use (230-240V). Plug the 230-240V refrigerator power cord into an easily accessible wall socket.

Electrical leads must be routed and secured so that they cannot come into contact with hot or sharp parts of the refrigerator.

The free length of the cord is 2.6 m and therefore recommended that the receptacle be located to the left side of the refrigerator (viewed from the rear) and approximately 100-150 mm from the floor. This allows easy access through the vent door.
The cord should be routed to avoid direct contact with the burner cover, flue cover or any other components that could damage the cord insulation.

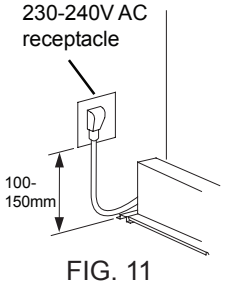

FIG. 11

12V SUPPLIES

The 12V connection of the refrigerator is shown in fig. 12. Connect the refrigerator to the vehicle battery or alternator by a direct cable; (check the polarity). The connection is made to the terminal block.
The connection is made to the positive (+) and negative (-) terminals of the terminal block. Correct polarity must be observed when connecting to the 12 volt DC supply. Do not use the chassis or the vehicle frame as one of the conductors.

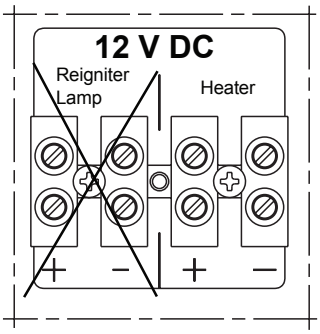

FIG. 12

Model	Fuse size (A)
RM4601	30

Cross-section
The wires connected to this terminal must have the following minimum cross-section area:
Maximum length of 8 meters from the refrigerator to the battery. 10 mm^2 cross-section low voltage multi strand cable.
Cable lengths > 8 meters will require a larger cross-sectional cable.
Connect two wires at the refrigerator and route directly to the 12 volt DC supply. To prevent the refrigerator from draining the battery, make sure that the current supplied to the motor home / caravan is cut off when the vehicle engine is not running, for example by fitting an ignition control relay.
Before leaving
Once the installation is complete, test the operation of the refrigerator and instruct the user on its correct operation. If the appliance fails to operate correctly, contact your local Dometic Service provider.

MOUNTING INSTRUCTIONS

REPOSITIONING THE HINGES

The refrigerator is equipped with reversible doors. A special door reversing kit must be used to reverse the doors. For further information, please contact your dealer.

MOUNTING DOOR PANEL

The refrigerator is delivered with door panels. Door panels can easily be fitted or changed. The dimensions of the panels must be:

Height	upper door	402 ± 1	mm
	lower door	826 ± 1	mm
Width		525 ± 1	mm
Thickness max.		4	mm

When mounting the panel, proceed as follows:

1. Open the door 90 degrees.
2. Remove the door decoration strip (2) by gently pushing the four tabs away with a flat blade screwdriver (1).
3. Insert the vertical edges into the grooves of the door frame (3).
4. Push the panel downward so that the lower horizontal edge of the panel (4) is fitted into the bottom grove (5).
5. Snap in the decoration strip (2).

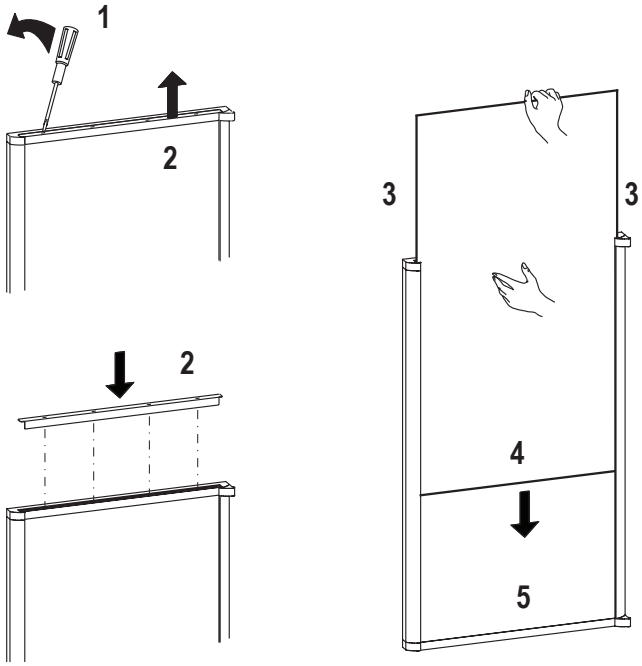

REMOVING AND REPLACING THE SHELVES

1. Remove the shelf locks by inserting the tip of a flat bladed screwdriver into the slot of the locks. Turn the screwdriver counterclockwise and then remove the shelf locks from the wire shelf.

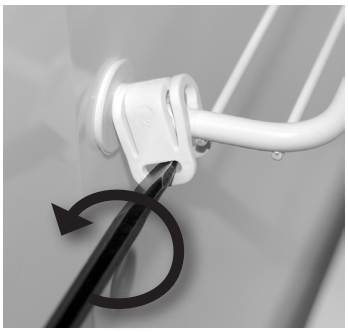

2. Tilt the shelf to one side at an angle while pulling forward.

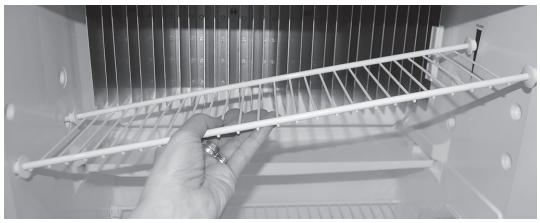

3. Reposition the shelf in the desired location. Insert the ends of the wire shelf on the left-hand side and slide the shelf into the holes on the right-hand side.
4. Slide the plastic plugs into the holes of the wall.
5. Snap the shelf locks onto the wire shelf.
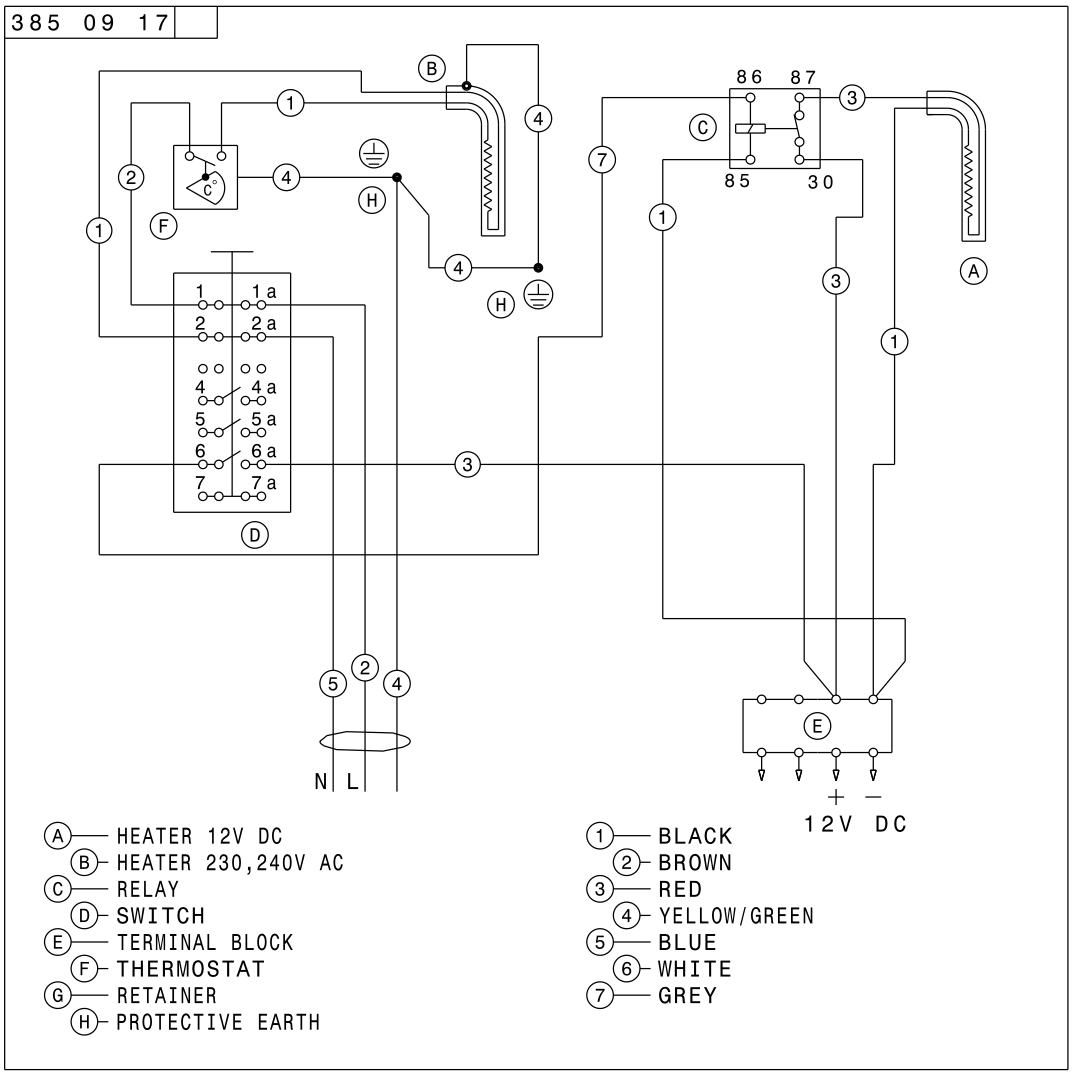
APPENDIX A - WIRING DIAGRAM