DOMETIC

RECORD THIS INFORMATION FOR FUTURE REFERENCE:

Model Number _____
Serial Number _____
Date Purchased _____
Retailer / Qualified Installer _____

INSTALLATION INSTRUCTIONS

REFRIGERATOR

RM2351	RM2510	DM2662	DM2862	NDA1402
RM2354	RM2551	DM2663	RM3962	
RM2410	RM2554	RM3762	NDM1062	
RM2451	RM2620	RM2820	RM1350	
RM2454	DM2652	DM2852	RM1350SL	

⚠ WARNING

FIRE OR EXPLOSION HAZARD

If you smell gas:
1. Open windows.
2. Do not attempt to light appliance.
3. Do not touch electrical switches.
4. Extinguish any open flame.
5. Shut off fuel supply.
6. Evacuate immediately and call emergency services.

Failure to follow these instructions could result in fire or explosion, which could cause property damage, personal injury, or death.

FOR YOUR SAFETY

Do not store or use gasoline or other flammable vapors and liquids in the vicinity of this or any other appliance.

⚠ WARNING

Improper installation, adjustment, alteration, service or maintenance can cause injury or property damage. Refer to this manual. For assistance or additional information consult a qualified installer, service agency or the gas supplier.

⚠ WARNING

If the refrigerator stops cooling - or - if it emits an ammonia smell, immediately turn the refrigerator off and contact a Service Center.

⚠ **Read these instructions carefully. These instructions MUST stay with this product.**

REVISION E
Form No. 3313238.036 6/17
(French 3313239.034_E)
©2017 Dometic Corporation
LaGrange, IN 46761

USA
SERVICE OFFICE
Dometic Corporation
1120 North Main Street
Elkhart, IN 46514

CANADA
Dometic Corporation
46 Zatonski, Unit 3
Brantford, ON N3T 5L8
CANADA

SERVICE CENTER & DEALER LOCATIONS
Please Visit:
www.eDometic.com

CONTENTS

CERTIFICATION AND CODE REQUIREMENTS 3

REFRIGERATOR REMOVAL / DISPOSAL 4

INSTALLATION PREPARATION 5

VENT APPLICATION TYPES 8

INSTALLATION PROCEDURE 13

APPENDIX A - OVERALL & ROUGH IN DIMENSIONS FOR ENCLOSURE 28

APPENDIX B - MINIMUM VENTILATION HEIGHTS 29

APPENDIX C - APPROVED VENTS 30

APPENDIX D - VENT INSTALLATION PROCEDURES 34

APPENDIX E - REARVIEW EQUIPMENT 36

APPENDIX F - WIRING DIAGRAMS 43

SYMBOLS

The following symbols are used throughout this manual:

This is the safety alert symbol. It is used to alert you to personal injury hazards. Obey all safety messages that follow this symbol to avoid possible injury or death.

WARNING — WARNING indicates a hazardous situation which, if not avoided, could result in death or serious injury.

CAUTION — CAUTION, used with the safety alert symbol, indicates a hazardous situation which, if not avoided, could result in minor or moderate injury.

NOTICE — NOTICE is used to address practices not related to personal injury.

Information

Step-by-step instructions

INTRODUCTION

The installation should be performed by qualified personnel only and must conform to all relevant local authorities. Be aware of possible safety hazards when seeing alert symbols on the refrigerator as well as in this manual. To ensure safe and efficient operation, the refrigerator and vents must be installed as identified in this manual without modification. The installer must affix the refrigerator model's user manual to the refrigerator.

Appearance of your product may vary from illustrations shown in this document.

Not all procedures in this document will apply to your product. Read and follow the information pertaining to the specific model number of your product before starting the installation.

⚠ WARNING

Any modifications or deviations:

- **Can lead to carbon monoxide leaking into the living area.**
- **Can reduce cooling performance and/or result in damage to the refrigerator.**
- **Will void agency certifications.**
- **Will void refrigerator warranty.**

NOTICE

Any deviation from the prescribed installation instructions in this manual must have prior written approval and safety certification verification from Dometic Corporation.

CERTIFICATION AND CODE REQUIREMENTS

This appliance is certified under the latest edition of ANSI Z21.19•CSA 1.4 Refrigerators using gas fuel. The installation must conform with local codes, or in absence of local codes, the following standards as applicable.

U.S.A.

- ANSI/NFPA70, National Electrical Code (NEC)
- ANSI/NFPA 1192, Recreational Vehicles Code
- Title 24 CFR, Part 3280, Manufactured Home Construction and Safety Standard
- National Fuel Gas Code, ANSI Z223.1/NFPA 54

CANADA

- CSA C22.1, Parts l & ll, Canadian Electrical Code
- CSA Z240 RV Series, Recreational Vehicles
- CSA Z240.4, Gas-Equipped Recreational Vehicles and Mobile Housing
- CSA B149.1, Natural Gas and Propane Installation Code

C US

REFRIGERATOR REMOVAL / DISPOSAL

Skip this section for OEM (new RV) installation or for RV's without existing refrigerator.

PREPARE TO REMOVE OLD REFRIGERATOR

1. Unplug 120 Vac power cord from receptacle at rear of refrigerator enclosure.
2. Disconnect 12 Vdc leads from refrigerator and cap lead ends.

WARNING

FIRE OR EXPLOSION HAZARD: Turn OFF LP gas supply at tank. Failure to obey this warning could result in death or serious injury.

3. Turn LP gas supply (to refrigerator) off.

NOTICE

Always use a backup wrench when loosing and tightening LP gas connections.

4. Disconnect LP gas line from refrigerator and cap line.

WARNING

FIRE OR EXPLOSION HAZARD: NEVER use an open flame to check for gas leaks. Failure to obey this warning could result in death or serious injury.

5. Verify there are no LP gas leaks.

REMOVE OLD REFRIGERATOR

1. Remove screws anchoring the refrigerator to the enclosure.
2. Slide refrigerator out of its enclosure (refrigerator compartment) and remove from RV.

REFRIGERATOR DISPOSAL

WARNING

SUFFOCATION AND ENTRAPMENT HAZARD: Remove fresh food and freezer doors from refrigerator prior to disposal. Failure to obey this warning could entrap a child and result in death or brain damage.

1. Leave shelves in place to prevent children from easily climbing inside refrigerator.
2. Recycle refrigerator using environmentally responsible practices.

Refrigerants **MUST** be recovered/recycled by a licensed technician who is EPA certified in refrigerant recovery and recycling procedures. Disposal **MUST** comply with all applicable local and national codes.

INSPECT REFRIGERATOR ENCLOSURE

- Verify there are no holes (other than ventilation holes) inside enclosure.
- Verify surface for sealing strips (isolating appliance combustion system from vehicle interior) is clean and flat to allow a complete seal.
- Verify no objects are protruding into enclosure that could contact refrigerator.

  Exceptions include utility connections for refrigerator.
- Verify seams are sealed to prevent flue gases from leaking into living area.
- Verify utility hookups (Water, LP gas, Electrical) for refrigerator are present and comply with all applicable codes.
- Review enclosure and venting requirements beginning with section, "Installation Preparation" on page (6).
- When enclosure is verified to meet all requirements, install refrigerator. See section, "Installation Procedure" on page (14)

INSTALLATION PREPARATION

ASSEMBLING THE REFRIGERATOR ENCLOSURE

NOTICE

The ventilation compartment is part of the product safety certification and must not be used for any other purpose than securing air for combustion and ventilation of flue gases and warm air.

FIG 1 - ENCLOSURE

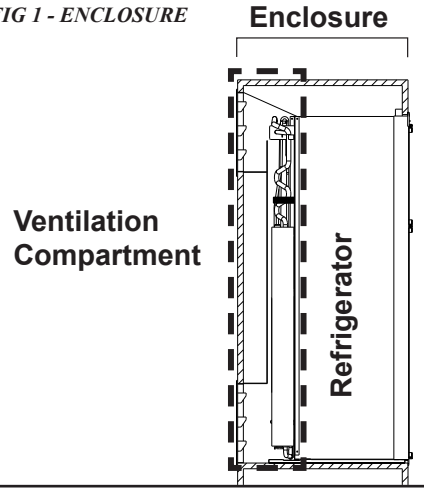

Read and follow these points:

- The refrigerator must be level and installed in a substantial enclosure, see "APPENDIX A".
- The floor must be solid and level and able to support the weight of the refrigerator and its contents.
- Ensure that any adjacent heat sources, (e.g. furnace exhaust vent) do not affect the ventilation of the refrigerator.
- All joints in the enclosure must be sealed to prevent gas leakage into the living area.
- The enclosure must be free of exposed materials that may potentially damage the refrigerator, e.g. screw tips, staples, etc.
- A wood strip must be in place across the upper opening of the enclosure. The top frame of the refrigerator will be anchored to the wood strip with screws, see FIG 2.
- The refrigerator must not be installed directly on carpeting:
  - Carpeting must be removed or protected by a metal or wood panel beneath the appliance, which extends at least full width and depth of the appliance.
  - If the refrigerator is sitting on a wood floor, it is recommended that the exposed portion of the floor behind the refrigerator be painted or otherwise protected against incidental moisture that can potentially enter through the refrigerator vents that are installed on the side wall and / or roof of the RV.
- It is required that OEM installed components such as current-carrying conductors (i.e. wiring), plumbing, etc. - except for those required to supply the refrigerator - shall not pass through the refrigerator enclosure except where:
  - OEM installed components inside of the refrigerator enclosure are contained outside of the ventilation compartment by means of permanently securing them (e.g. behind paneling, behind batt-type insulation, inside of paneled storage space above refrigerator) in such a manner that OEM installed components will not come into contact with the refrigerator.
  - Applications for which there are no alternatives except to have these OEM installed components pass through the ventilation compartment the following requirements must be met: 1) current carrying conductors (120V and 12V) and conductor routing - except for those required to supply the refrigerator - must be protected by conduit, raceway, covering boards or equivalent and in all cases must meet or exceed the requirements of the current publication of NFPA70 and article 551 of the NEC, 2) all OEM installed components shall maintain a minimum clearance of 1/2" clearance from the cooling unit to ensure that they will not come into contact with the heated boiler or tubing, 3) the routing of OEM installed components shall not impede the ventilation path for proper operation or combustion, 4) OEM installed components must not come into contact with the refrigerator mounting rails or frame and the refrigerator should not be modified in any way to accommodate the location or routing of OEM installed components.

⚠ WARNING

Failure to adhere to the above installation criteria could create a combustion hazard.

CLEARANCES

CSA International certification allows the refrigerator to have zero (0) inch minimum clearance at the sides, rear, top, and bottom. While there are no maximum clearances specified for certification, the maximum clearances specified are necessary for correct refrigerator performance.

CLEARANCES (FIG 2)	
Top (G)	**0" Min to 1/4" Max**
Side (K)	**0" Min to 1/4" Max**
Bottom (L)	**0" Min to 0" Max**
Rear (M[1])	**0" Min to 1" Max**

[1] *The distance between the refrigerator cooling unit and the wall or baffle behind it.*

FIG 2 - CLEARANCES

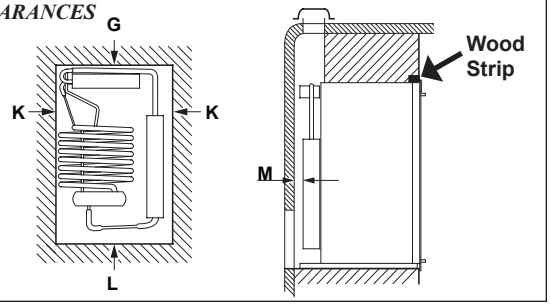

INSTALLATION PREPARATION

TOP AND SIDES

See "APPENDIX A" for rough in dimensions. Dimensions will vary by model. If there is more than 1/4" between either side or the top of the refrigerator and the inside of the refrigerator box, then fill the space with insulation, baffles, or non-flammable fabricated seals to avoid trapping heat and sacrificing the performance of the unit. See *Insulation note* below for additional details.

INSULATION NOTE!

- Any insulation used must be securely attached to the enclosure walls and ceiling in order to prevent it from shifting when the refrigerator is installed in enclosure.
- If there is a void space above the refrigerator, insulation should be secured with spray adhesive to the top of the refrigerator to fill the space.
- Trim insulation. Cut it 2-3" shorter than the depth of the refrigerator box, see FIG 3 below.
- Insulation must not come in contact with the cooling unit! Loose insulation can obstruct air flow creating cooling issues and possible damage to the refrigerator.

FIG 3 - INSULATION

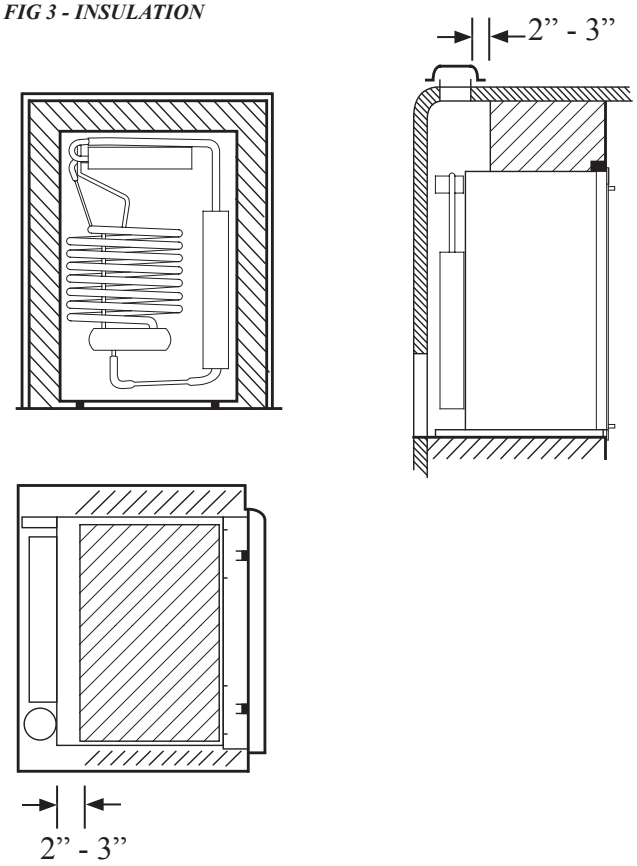

Place insulation filling in the space between refrigerator compartment and sides and top of refrigerator.

VENTILATION REQUIREMENTS

Ventilation is one of the requirements for proper cooling unit operation. Clearances and the use of vents ensure a natural draft which is necessary for good refrigeration.

Make sure to read and follow these points:

- Certified installation requires one lower fresh air intake vent and one upper exhaust vent.
- Vents should be centered to the back of the refrigerator. If it is not possible to center the vent, refer to the offset installation, see "OFFSET VENTS", page 9.
- Safety certification requires specified Dometic vents, see "APPENDIX C".
- Any obstruction of either of the vent openings is not permissible, e.g. roof rafters, roofing materials, etc.
- Lower vent: Make sure the opening is even with - or - below the floor level to allow any raw LP gas to escape to the outside. **NOTE!** Floor must not interfere with or block vent openings.

FIG 4 - LOWER VENT

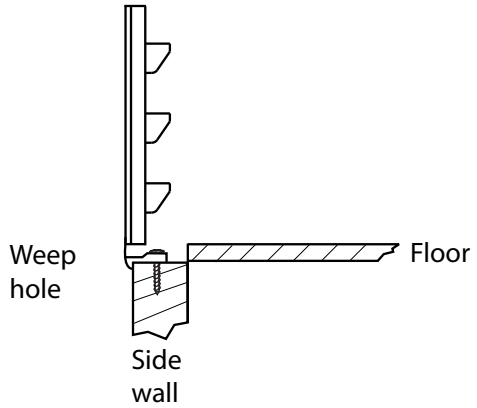

⚠ WARNING

COMBUSTION HAZARD. Unburned "Raw" LP gas is heavier-than-air and can collect at floor level creating a combustion hazard.

- For vents installed above floor level, additional holes are required to vent these gases to the out-of-doors. Use FIG 5 for details.

FIG 5 - VENT ABOVE FLOOR LEVEL

When lower vent frame is positioned higher than the refrigerator compartment floor, the following is required:

- 2 holes with a diameter of 1-3/4" 1 in^2 / hole free area.)
- Cover holes with a screen (min. 14 x 14 per inch)
- Holes must be clear of any obstruction.

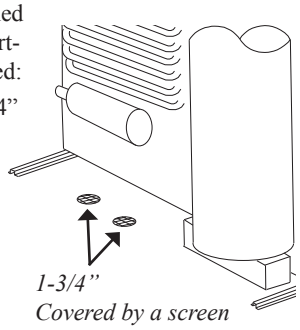

- The flow of combustion and ventilating air must not be obstructed, e.g. by an open RV door.
- Do not install an awning too close to the upper side vent. Allow a distance of approx. 6-12”.
- The minimum vent height requirements, listed in “APPENDIX B”, are part of the safety certification and must be complied with.

RECESS DEPTH

Spaces of more than 1”, see FIG 6, from rear wall to the refrigerator may create performance problems. Fresh air will not pass through the cooling unit which will reduce the efficiency. It is important to check the recess depth and add baffle(s) to increase the movement of air across the coil.

FIG 6 - RECESS DEPTH

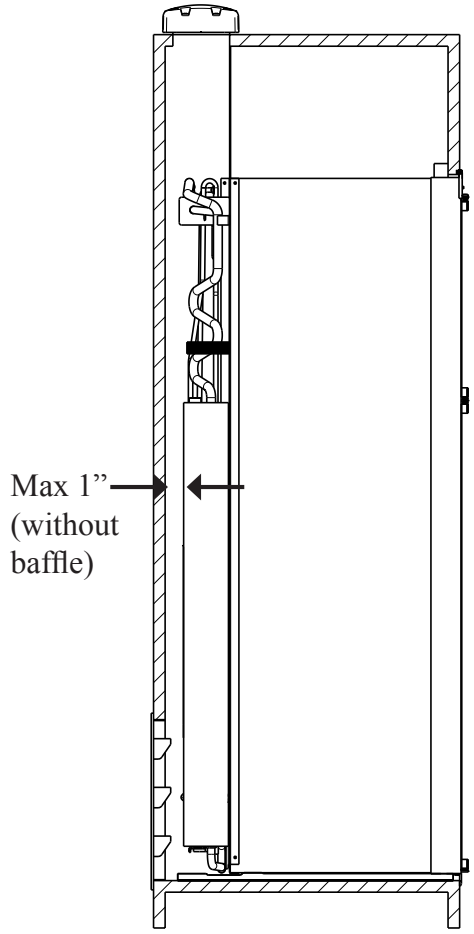

If there is more than 1” between the inside of the ventilation compartment and cooling unit, it is required to add box baffle(s) starting above the lower access vent and running perpendicular to the side wall. The baffle should extend up to the ceiling (in board roof vent applications) or up to within 1/2” lower than the condenser fins (roof vent applications). For upper and lower side wall vent applications the baffle should come within 1/2" lower than the condenser fins. This will ensure more efficient operation in warm temperatures. Make sure the baffle is of the same width as the ventilation compartment, see FIG 7.

FIG 7 - BOX BAFFLE

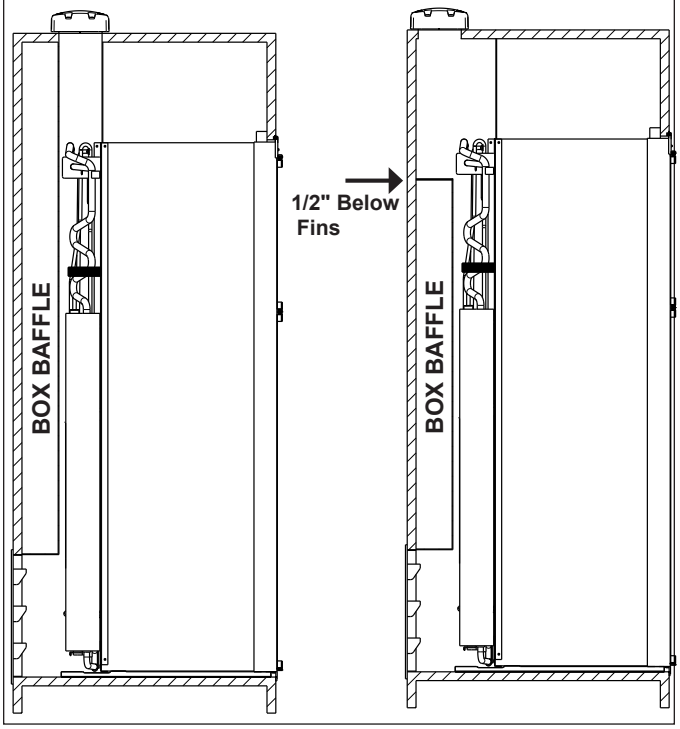

WATER SUPPLY CONNECTION

REFRIGERATOR MODELS EQUIPPED WITH ICE MAKER, ICE AND WATER DISPENSERS

The water supply system must have a minimum pressure of 15 pounds per square inch gauge (psig). A 1/4” diameter water line to the water valve should be used at the rear of the refrigerator. The water line must have a manual shutoff valve placed where it is easily accessible.

INSTALLATION PREPARATION

OFFSET VENTS

If vents must be offset due to interference of building materials the vent must always be offset towards the flue side of the cooling unit. The vent should be centered over the cooling unit so that the air can flow up and out of the compartment creating a chimney effect. For offset vent applications, prior written approval and safety certification must be obtained from Dometic Corporation.

FIG 8 - OFFSET VENT
UPPER AND LOWER SIDE VENT

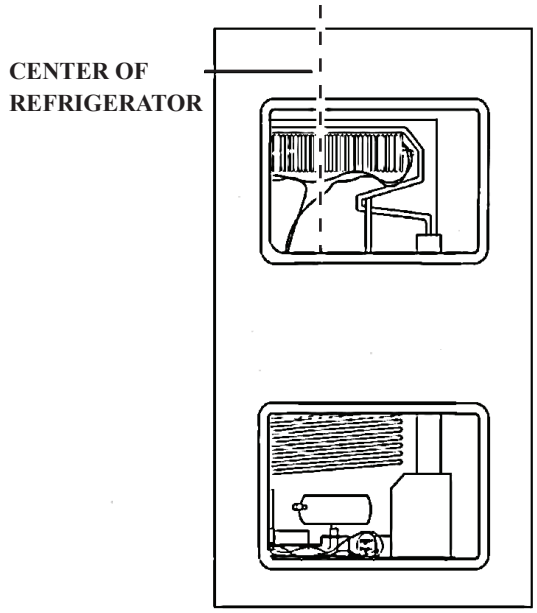

FIG 9 - OFFSET VENT
SIDE AND ROOF VENT

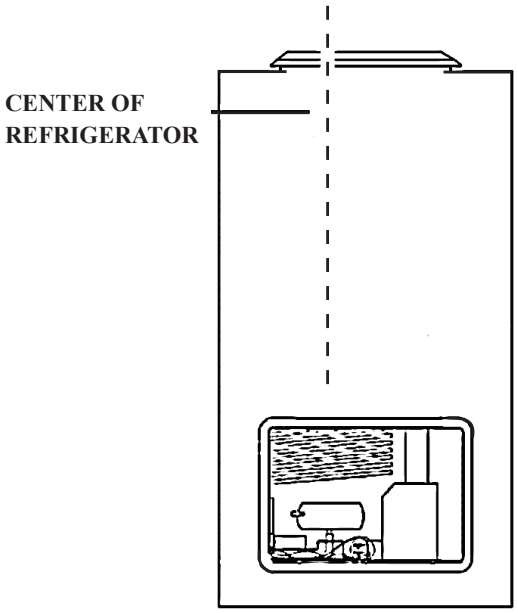

VENT APPLICATION TYPES

CHOOSING TYPE OF VENT APPLICATION

There are four types of applications:

- ROOF VENT APPLICATION
  Recommended for typical installations. Check the enclosure depth, see "INSTALLATION PREPARATION > ENCLOSURE DEPTH" and add a baffle if required. Roof vent installations can also be used when vents are inboard or offset due to radius roof or interference with building materials.
- UPPER AND LOWER SIDE VENT APPLICATION
  Choose this type of installation when a roof vent installation is not possible. Baffle should be added. The refrigerator **must** be equipped with fan(s).

Please refer to page 30, some fans are optional and not required.

- ISLAND APPLICATION
  Intended for refrigerators installed on an inside wall and must be vented through the floor to the ceiling.
- CORNER APPLICATION
  Intended for refrigerators installed in the rear corner of the vehicle or in an angled cabinet. The refrigerator **must** be equipped with fan(s).

VENT APPLICATION TYPES

ROOF VENT APPLICATION

INSTALL LOWER SIDE VENT AND ROOF VENT

Step	Action
1	CHECK VENTILATION HEIGHT. See “APPENDIX B”.

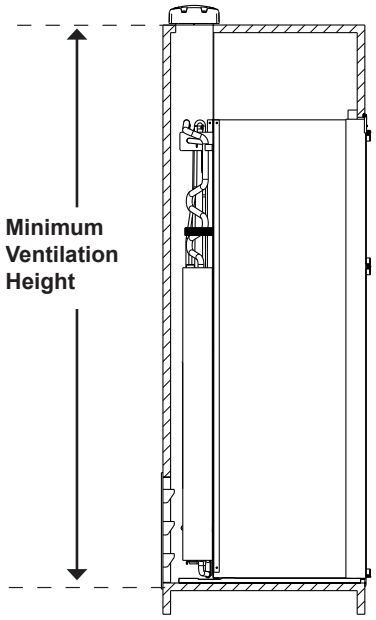

2 CHECK RECESS DEPTH.
See “INSTALLATION PREPARATION > RECESS DEPTH”. If required, install a box baffle above the lower access vent.

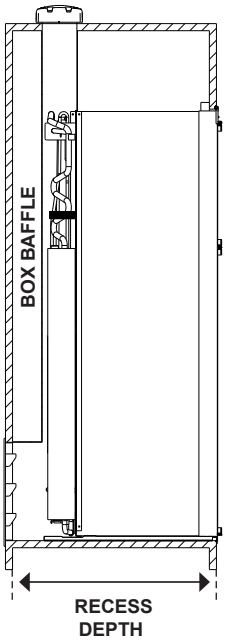

3 INSTALL LOWER SIDE VENT
See “APPENDIX D”.

4 INSTALL ROOF VENT

- OPTION 1 - TYPICAL
  See “APPENDIX D”.

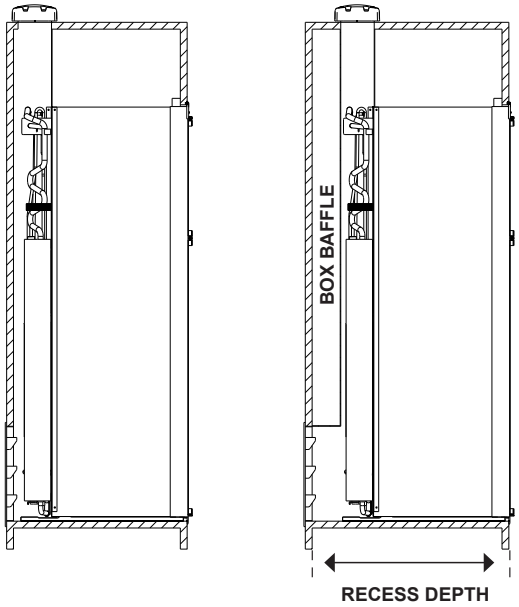

- OPTION 2 - INBOARD
  Inboard installs due to radius roof or interference with building material.

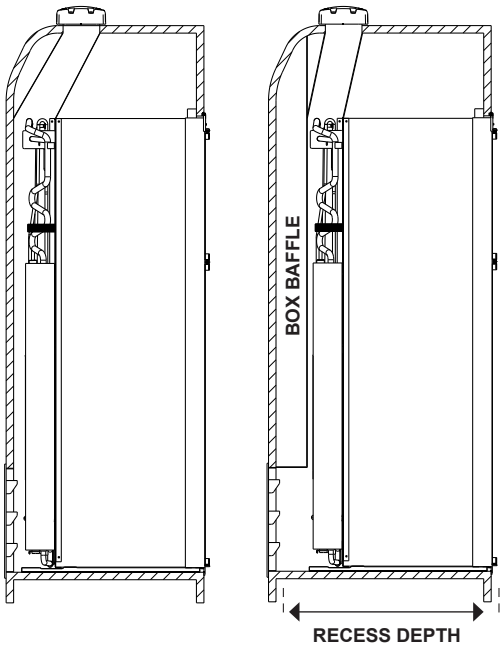

VENT APPLICATION TYPES

UPPER AND LOWER SIDE VENT APPLICATION

INSTALL UPPER AND LOWER SIDE VENTS

Step	Action
1	CHECK VENTILATION HEIGHT. See “APPENDIX B”.

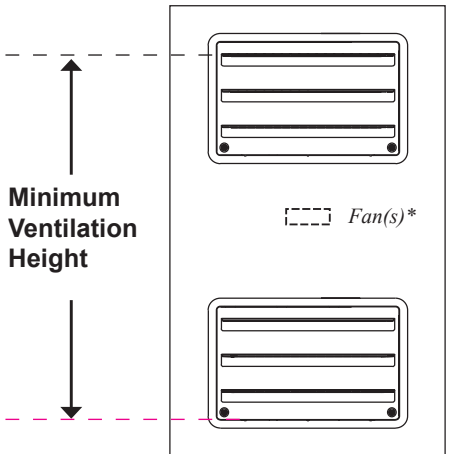

** Fan(s) position may vary by model.*

2 CHECK RECESS DEPTH. See “INSTALLATION PREPARATION > RECESS DEPTH”. If required, install a box baffle above the lower access vent extending within 1/2” lower than the condenser fins as shown in the picture below.

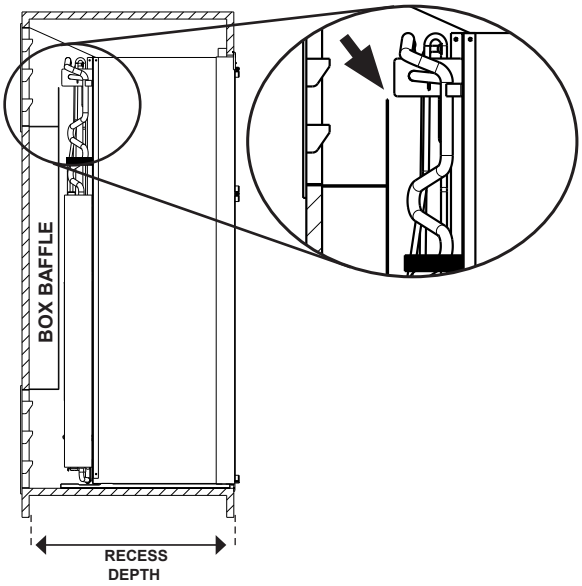

3 INSTALL LOWER SIDE VENT. See “APPENDIX D”.

4 INSTALL UPPER SIDE VENT. See “APPENDIX D”.

ISLAND APPLICATION

ACCESS PANEL

- A sealed access panel is required when using this system in conjunction with below floor ventilation. Access is necessary to complete gas connections, gas leak tests, and periodic service requirements at the rear of the refrigerator.

Access panel dimensions

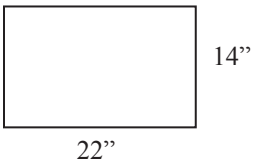

- If the refrigerator is located within the vehicle interior it must be completely sealed to prevent products of combustion or raw gas leakage within the living space! If it is placed alongside the sidewall and floor ventilation is provided, rear access is still required.
- The door or panel should prevent water entry.

DUCT

An air duct extends downwardly from the refrigerator through a floor of the vehicle. If the refrigerator is not equipped with a fan, a fan must be installed in the duct to aid air circulation. Air for cooling the condenser and absorber is drawn up the duct from outside the vehicle and exhausted outside the vehicle through an upper duct and vent in a roof of the vehicle.

The duct must be centered horizontally on the back of the refrigerator and should have the following dimensions:

Length (L): 11-34” min - max values
Width (W): 6.5”
Depth (D): 4-54” min - max values

FIG 10 - DUCT DIMENSIONS

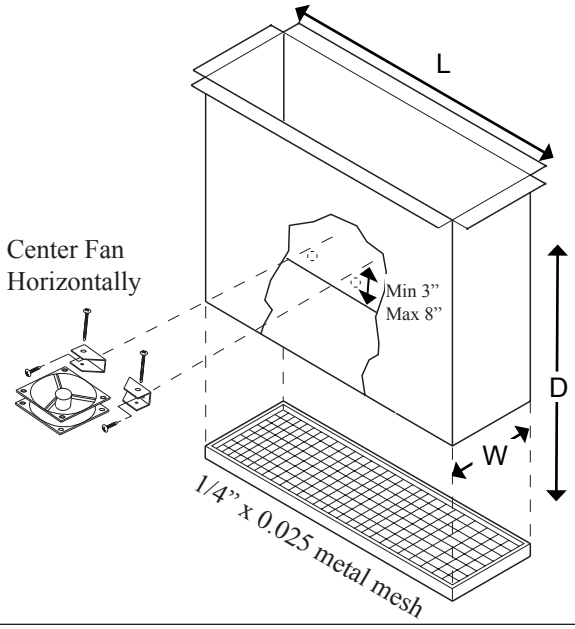

ISLAND APPLICATION CONT'D

INSTALL DUCT AND ROOF VENT

Step	Action
1	CHECK VENTILATION HEIGHT. See “APPENDIX B”.

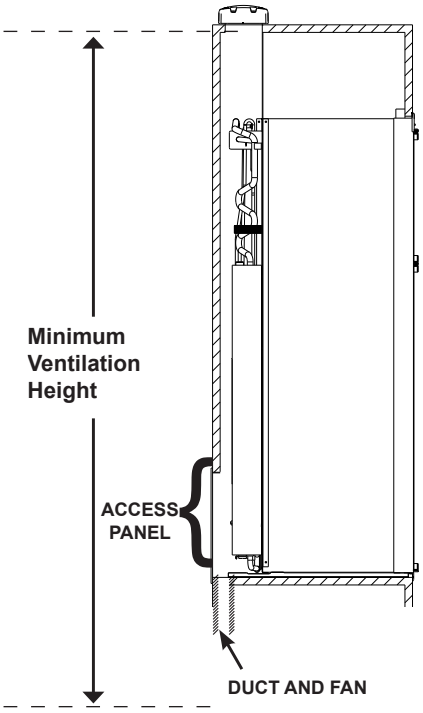

2	CHECK RECESS DEPTH. See “INSTALLATION PREPARATION > RECESS DEPTH”. If required, install a box baffle above the lower access vent. Box baffle must be positioned no lower than access panel.

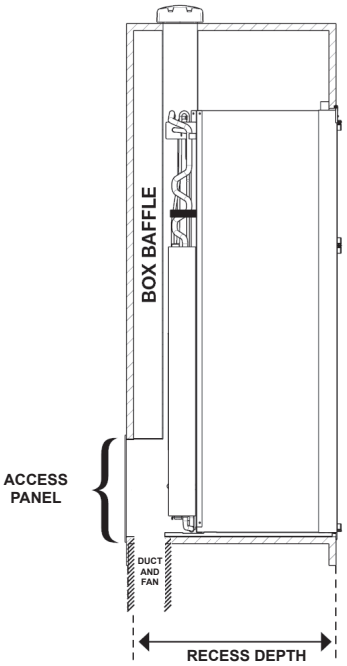

3	INSTALL ACCESS PANEL
4	INSTALL DUCT
5	INSTALL ROOF VENT See “APPENDIX D”.

CORNER APPLICATION

OPTION 1 - INSTALL LOWER SIDE VENT AND ROOF VENT

Step	Action
1	CHECK VENTILATION HEIGHT. See “APPENDIX B”.

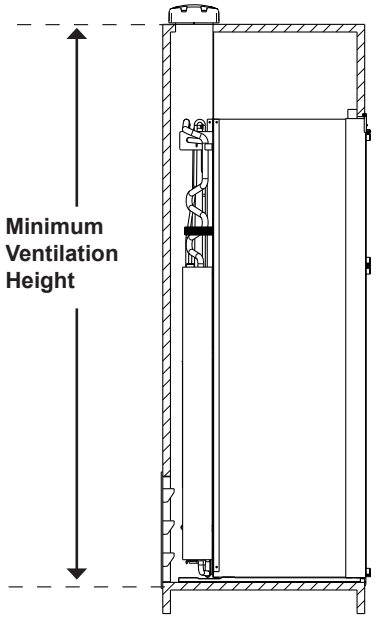

2	CHECK RECESS DEPTH. See “INSTALLATION PREPARATION > RECESS DEPTH”. **A box baffle is required above the lower access vent.**

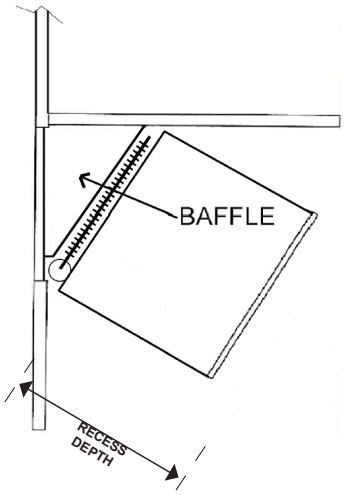

3 INSTALL LOWER SIDE VENT.
See “APPENDIX D”.

4 INSTALL ROOF VENT
See “APPENDIX D”.

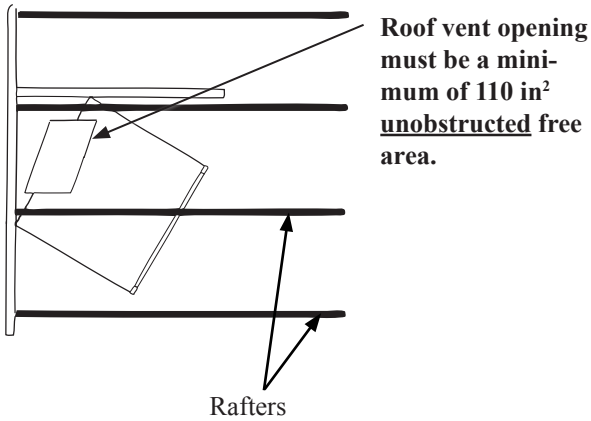

OPTION 2 - INSTALL UPPER AND LOWER SIDE VENTS

Step	Action
1	CHECK VENTILATION HEIGHT. See “APPENDIX B”.

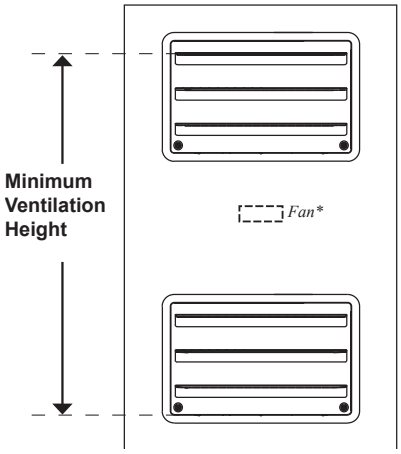

** Fan position may vary by model.*

2 CHECK RECESS DEPTH.
See “INSTALLATION PREPARATION > RECESS DEPTH”. **A box baffle is required above the lower access vent.**

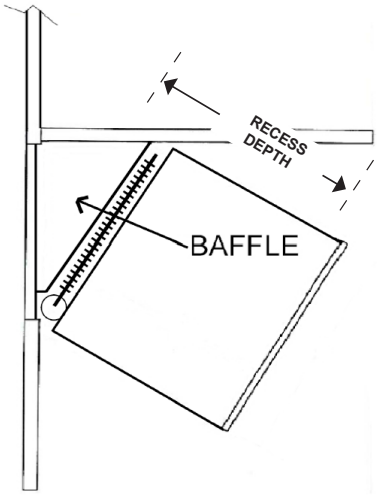

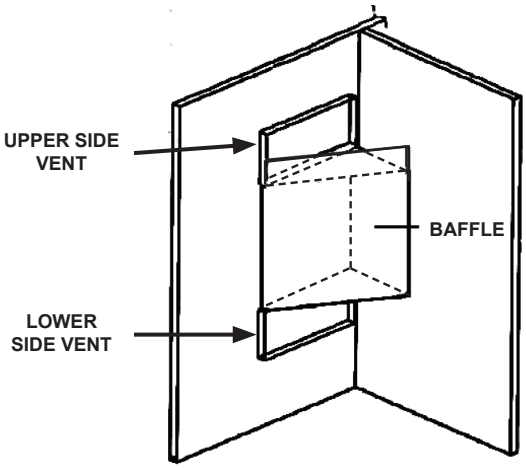

3 INSTALL LOWER SIDE VENT.
See “APPENDIX D”.

4 INSTALL UPPER SIDE VENT.
See “APPENDIX D”.

INSTALLATION PROCEDURE

INSTALLING THE REFRIGERATOR

Be careful when installing the refrigerator model NDM1062. It is equipped with the latest vacuum insulated panel technology. The insulating panels are located on the top, back, bottom, sides and doors. If the surface is punctured, loss of insulation will occur, resulting in poor refrigerator performance.

For a proper installation, follow these instructions:

- Carefully place the refrigerator in the enclosure.
- Verify that there is a complete seal between the front frame of the refrigerator and the top, sides and bottom of the enclosure. A length of sealing strip is applied to the rear surface of the front frame for this purpose. The sealing strip should provide a complete isolation of the appliance's combustion system from the vehicle interior.
  RM2351, RM2354, RM2410 and RM2510: Apply a sealing strip to the foremost floor of the enclosure, see FIG 11.

  Be careful not to damage the sealing strip when the refrigerator is put in place!
  RM2351 & RM2354: Do **NOT** remove the factory installed sealing strip at top rear corner of cabinet. It is **NOT** part of the shipping package and must be left intact. See FIG 11.

FIG 11 - RM2351, RM2354, RM2410 & RM2510

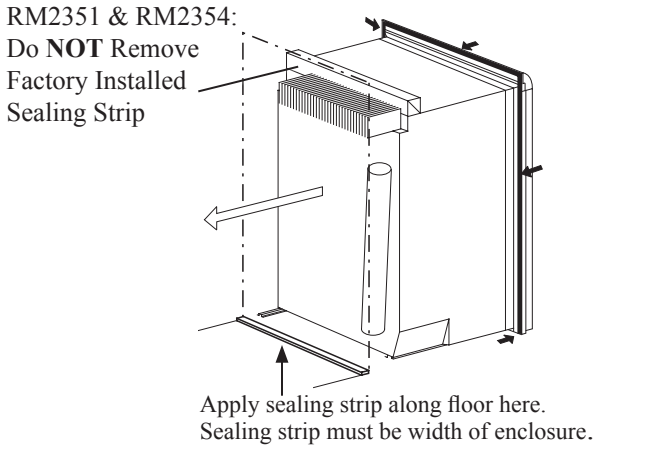

FIG 12 - RM2451, RM2454, RM2551, RM2554, DM2652, DM2662, DM2663, DM2852, DM2862, RM3762, RM3962, NDM1062, RM1350, RM1350SL & NDA1402

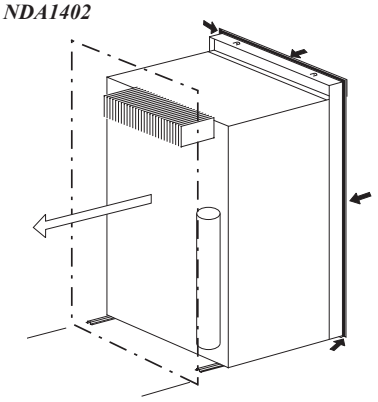

General view. Features may vary by model.

SECURING THE REFRIGERATOR

It is important to follow the sequence in securing refrigerator in enclosure since failure in doing so can cause leakage between the frame and cabinet.

After the refrigerator is put in place (ensuring a combustion seal at the front frame), the refrigerator is to be secured in the enclosure with screws (not included).

RM2351 & RM2354

Install the five screws in the following order:

1. Four screws installed through the front frame. (To cover the screw heads, use the plugs in the parts bag.)
2. One screw installed in the rear base.

FIG 13 - SECURING RM2351 & RM2354

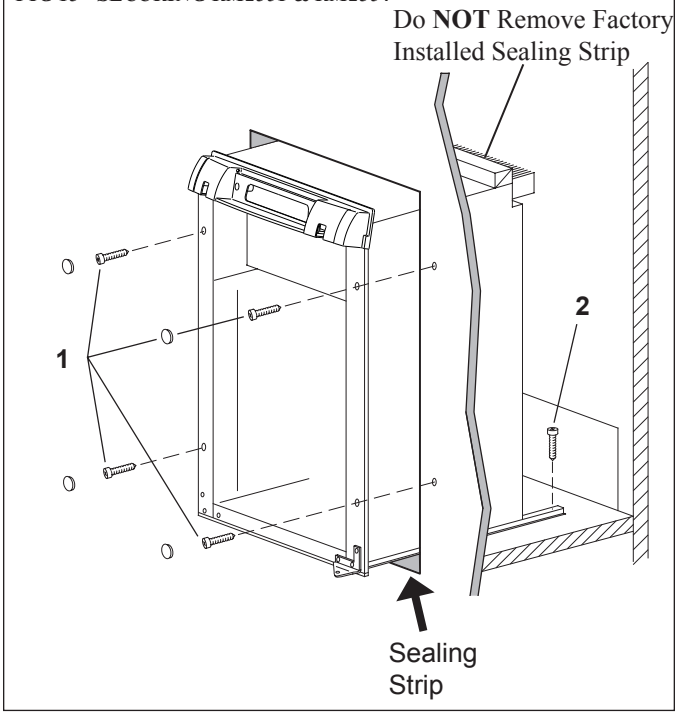

INSTALLATION PROCEDURE

RM2410 & RM2510

Install the six screws in the following order:

1. Two screws installed through the front base.
2. Two screws installed in the top frame.
3. Two screws installed in the rear base.

FIG 14 - SECURING RM2410 & RM2510

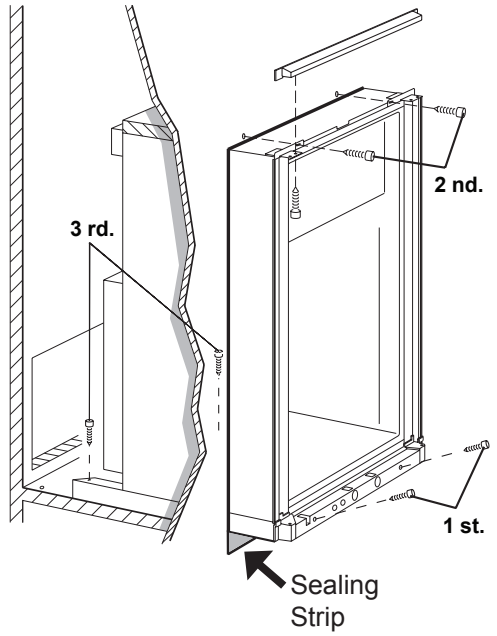

RM2620 & RM2820

Install the screws in the following order:

1. Two screws installed through the front base.
2. Two screws installed in the top frame.
3. Two screws installed in the rear base.
4. Attach lower front strip after the refrigerator is set into the cutout opening.

FIG 15 - SECURING RM2620 & RM2820

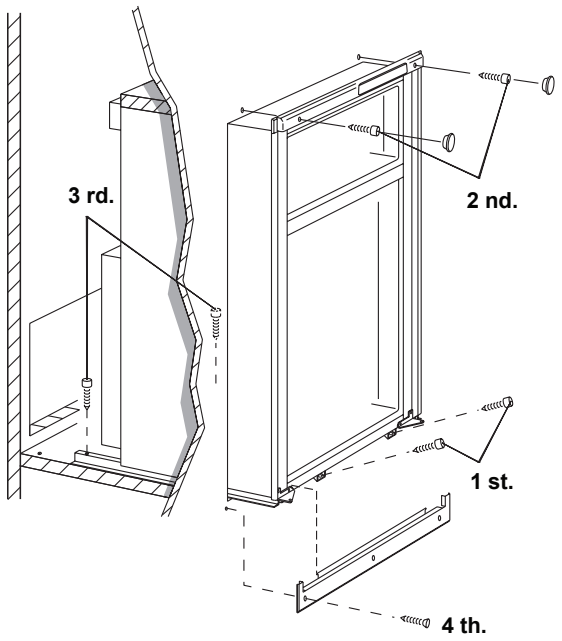

INSTALLATION PROCEDURE

RM2451, RM2454, RM2551, RM2554, DM2652, DM2662, DM2663, DM2852, DM2862, RM3762, RM3962, RM1350, RM1350SL, NDA1402 & NDM1062

Install the screws in the following order:

1. TWO SCREWS INSTALLED THROUGH THE FRONT BASE.
   The refrigerator is provided with a lower front strip (shipped as a loose part). Attach the front strip after the refrigerator is set into the cutout opening.

   a) Install the lower front strip by sliding it under the bottom hinge plate(s).

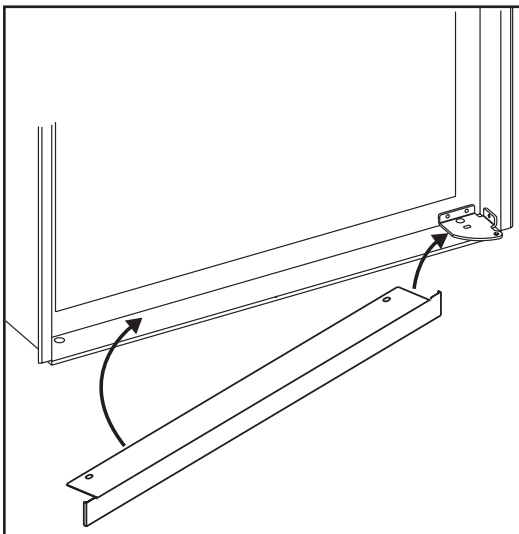

Models with 1 Hinge Plate
The hinge plate can be located on the left or right side depending on the door swing. Slip under the hinge and swing into place.

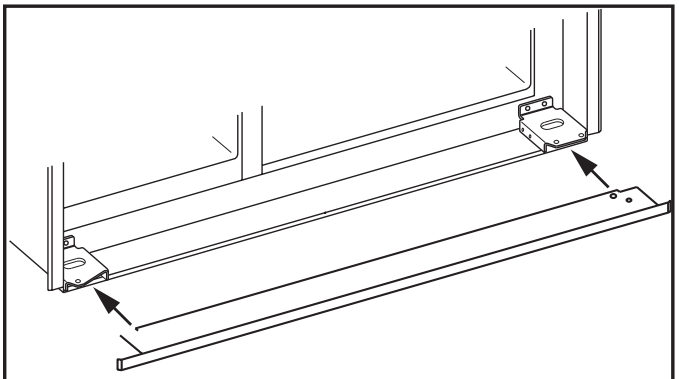

Models with 2 Hinge Plates

   b) Secure the refrigerator and the lower front strip with two screws.

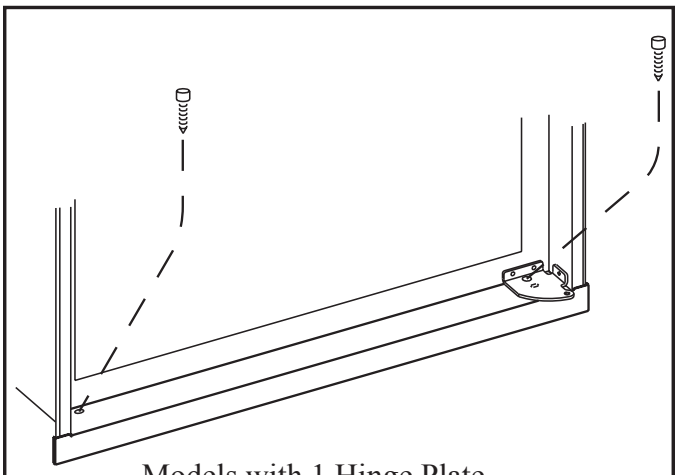

Models with 1 Hinge Plate
One screw through the hinge and on the opposite side and then, one screw through the lower front strip.

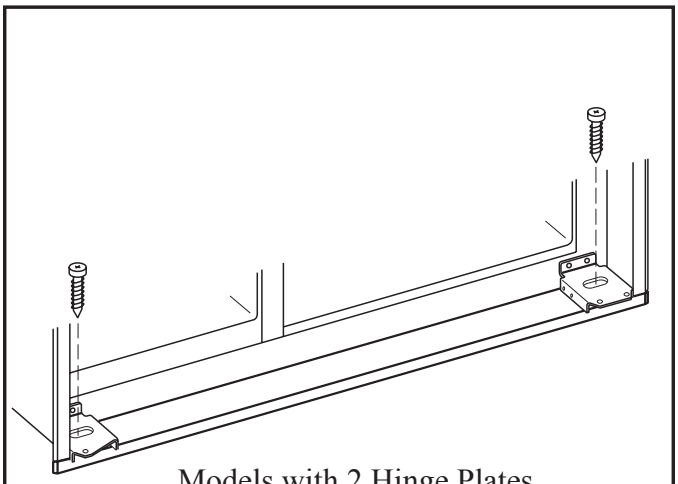

Models with 2 Hinge Plates
One screw through each hinge.

2. TWO SCREWS INSTALLED IN THE TOP FRAME.
   RM2451, RM2454, RM2551, RM2554, DM2652, DM2662, DM2663, DM2852, DM2862 & NDM1062

   a) Gently push the tabs out of the hole in the hinge with a flat blade screwdriver (both sides).

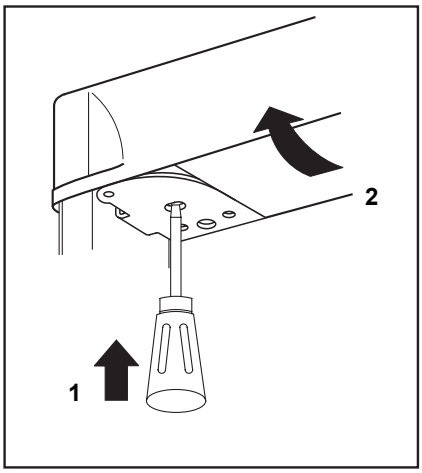

   b) Carefully tilt the top decoration panel and lift to remove from top frame. Be careful not to damage the circuit board and wires.

   c) Install the two screws in the top frame, the holes are accessible from underneath.

   d) Seal the opening for the screws with aluminum tape.

   e) Replace the top decoration panel. Be careful not to pinch the wires behind the panel. Make sure the tabs snap back into the holes in the hinge plate.

   RM3762, RM3962, RM1350, RM1350SL & NDA1402
   Fasten the refrigerator with two screws through the holes underneath the top decoration panel.

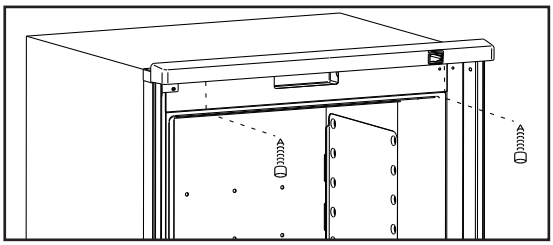

3. ONE SCREW INSTALLED IN THE REAR BASE. OPTIONAL SCREW MAY BE ADDED.
   RM2451, RM2454, RM2551, RM2554, DM2652, DM2662, DM2663, DM2852, DM2862, RM3762, RM3962 & NDM1062

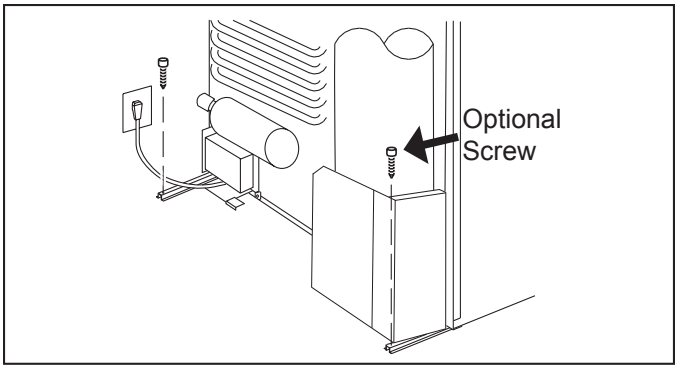

General view. Features may vary by model.

RM1350. RM1350SL & NDA1402

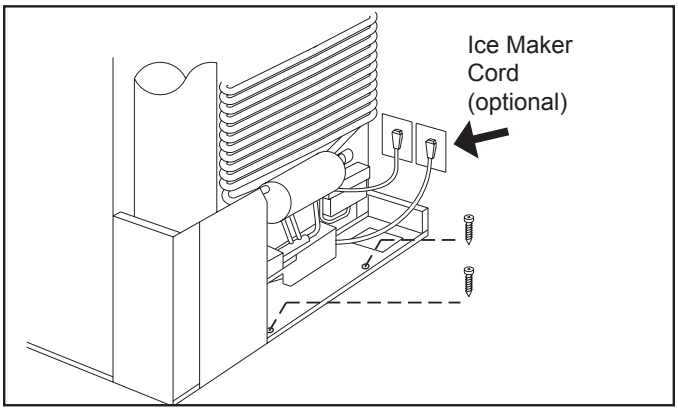

General view. Features may vary by model.

DRAIN WATER HOSE

- Hose must not contact the boiler casing.
- Hose must not be kinked.
- Hose must not be routed uphill at any point.
- Perforated plug must be present at end of hose.

OPTION 1 - THROUGH FLOOR

Drill hole through flooring, see FIG 16. Seal around hole. Check to make sure the supplied hose is long enough – if not, installer will have to supply extra length of hose.

FIG 16 - DRAIN WATER HOSE

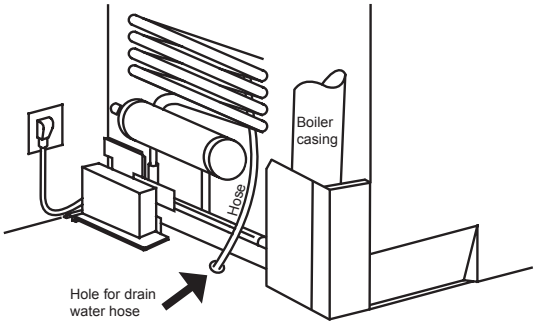

General view. Features may vary by model.

OPTION 2 - THROUGH VENT FRAME (PLASTIC VENTS ONLY)

Pull end of hose through louvers in vent door. Cut hose to length. Reinstall perforated plug.

OPTION 3 - HANGING CLIP (PLASTIC VENTS ONLY)

Install clip (part number 3106559.xxx) during vent installation. Insert hose into "j" portion of clip. Cut hose to length. Reinstall perforated plug. Hose should be positioned to drain into uppermost row of louvers in vent door.

OPTION 4 - THROUGH VENT DOOR (SIDE-BY SIDE PLASTIC VENT ONLY)

Drill a 5/8" hole in vent frame directly above floor line. Route drain hose through hole and cut to length. Reinstall perforated plug on the outside of the vent frame. Apply sealant around plug to ensure water does not seep into enclosure.

CONNECTIONS

⚠ CAUTION

All connections should be routed to avoid direct contact with boiler casing, burner cover, or any other components of refrigerator.

GAS CONNECTION

Hook up to the gas supply line is accomplished at the manual gas valve, which is furnished with a 3/8" SAE (UNF 5/8" -18) male flare connection. **ALWAYS** use a back-up wrench when loosening and tightening gas connections. All completed connections should be examined for leaks using an approved leak detection solution.

⚠ WARNING

EXPLOSION HAZARD. Never use an open flame to check for gas leaks. Failure to obey this warning could cause an explosion resulting in death or severe personal injury.

The gas supply system must incorporate a pressure regulator to maintain a supply pressure of not more than 11 inches water column. When testing the gas supply system at test pressures:

- **> 1/2 psi** - the refrigerator and its individual shutoff valve must be disconnected from the gas supply piping system.
- **≤ 1/2 psi** - the appliance must be isolated from the gas supply piping system by closing its individual manual shutoff valve.

If detailed instructions on the installation and connection to the gas supply are required, please contact your dealer or distributor.

ELECTRICAL CONNECTION

120 VAC CONNECTION

The refrigerator is equipped with a grounded three-prong plug for protection against shock hazards. It should be plugged directly into a properly grounded three-prong receptacle. **Do not cut or remove the grounding prong from this plug!**

The free length of the cord is 2 feet. To allow easy access through the vent door, it is recommended to install the receptacle on the opposite side of the burner assembly and approx. 3-6" above the refrigerator mounting floor.

FIG 17 - 120 VAC CONNECTION

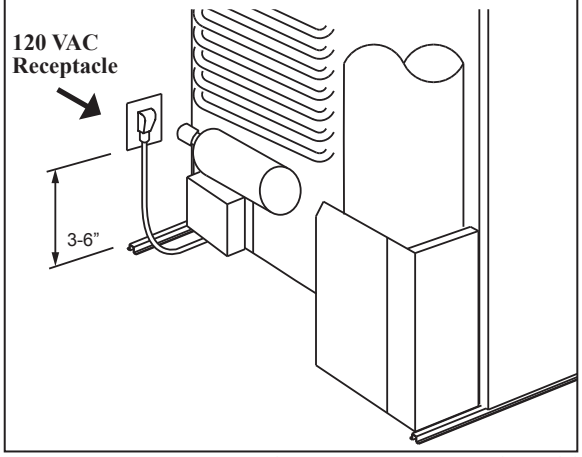

General view. Features may vary by model.

INSTALLATION PROCEDURE

12 VDC CONNECTION

RM2451, RM2551, DM2652, DM2852, RM3762, RM3962, RM1350, RM1350SL & NDA1402: These refrigerator models are not designed for 12V DC operation of the cooling system. However, 12V DC must be supplied to operate the controls.

RM2354, RM2454, RM2554, DM2662, DM2663, DM2862 & NDM1062: These refrigerator models require a continuous 12 VDC supply to maintain the automatic energy system.

The connection is made to the positive (+) and negative (-) terminals of the terminal block on back of the refrigerator.

Correct polarity must be observed when connecting to the DC supply. Do not use the chassis or vehicle frame as one of the conductors. Connect two wires at the refrigerator and route to the DC supply. Ensure the connections are clean, tight and free from corrosion.

For 3-way models, the voltage drop affects the wattage output of the 12 V cartridge heater and the refrigerator performance. The 12 VDC heater is fused with a 30 amp. in-line blade fuse.

Ensure that the wires from the battery to the refrigerator are able to handle the load. Recommended wire sizes are displayed in the table below.

MAXIMUM WIRE LENGTH

WIRE / MODEL	Size	Length
	AWG	ft
RM2351, RM2451 RM2551, DM2652 DM2662, DM2852 DM2862, RM3762 RM3962, NDM1062 RM1350, RM1350SL, NDA1402	14 12	17 27
RM2354, RM2454 RM2554, DM2663	10 8	17 27

ALTERNATOR (D+) CONNECTION

RM3762, RM3962, RM1350 & RM1350SL (with the automatic door locking system)

The refrigerator requires the connection of a signal wire from the alternator (D+) in order to maintain the automatic door travel latch for RM1350, and RM1350SL and the temporary gas lockout function. The gas operation will automatically be locked out for a period of 15 minutes when the engine is switched off. This will prevent gas operation e.g. when stopping at a refueling station.

Connect the vehicles alternator (D+) to the D+ on the terminal block.

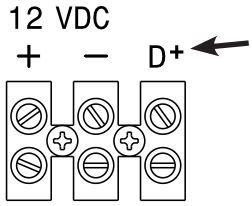

Valid for refrigerator models with the automatic door locking system.

FIG 18 - ALTERNATOR CONNECTION

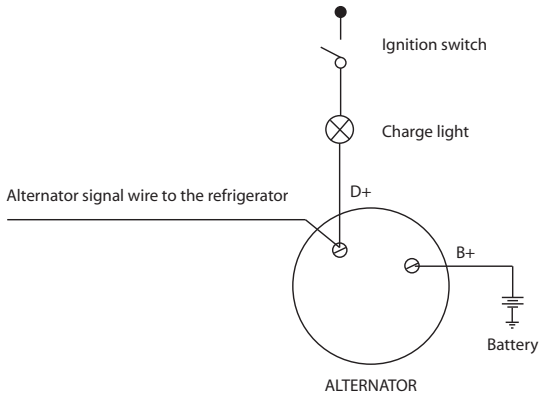

DOOR AND HANDLE MOUNTING INSTRUCTIONS

REVERSING THE DOOR SWING

RM2351, RM2354, RM2451, RM2454, RM2551, RM2554, DM2652, DM2662, DM2663, RM3762, DM2852, DM2862, RM3962, NDM1062 & NDA1402

A special hinge kit must be used in order to change the door swing. For conversion kit number, please contact service point or distributor service department.

RM2410 & RM2510

The refrigerator is equipped with hinges that make it possible to change the direction the door opens by moving the hinges to the opposite side. To change the door hinges from one side to the other, follow these steps:

1. Open the door and remove the two screws holding the top decoration. (The screws are accessible from beneath.)
2. Remove the top hinge pin and lift out the door.
3. Unscrew the bottom hinge pin.
4. Remove the plastic cap from the opposite lower hinge and place it in the hole just “left empty” by the lower hinge pin.
5. Screw the lower hinge pin in the hole from which the plastic cap was removed.
6. Before replacing the door on the refrigerator, remove the catches and move them to the opposite side of the cabinet.
7. The holes are covered with plastic caps that must be removed and inserted in the holes that previously held the catches.
8. Unscrew the handle and move it to the opposite side of the door.
9. Insert the plastic caps into the holes left open on the door. (Plastic caps for empty holes are in the parts bag inside the refrigerator.)
10. Remount the door and hinge pins in the reverse order of their removal.
11. Before the top decoration is refitted, check that the door closes easily and the gasket seals well on all sides.

FIG 19 - RM2410 & RM2510, REVERSING THE DOOR SWING

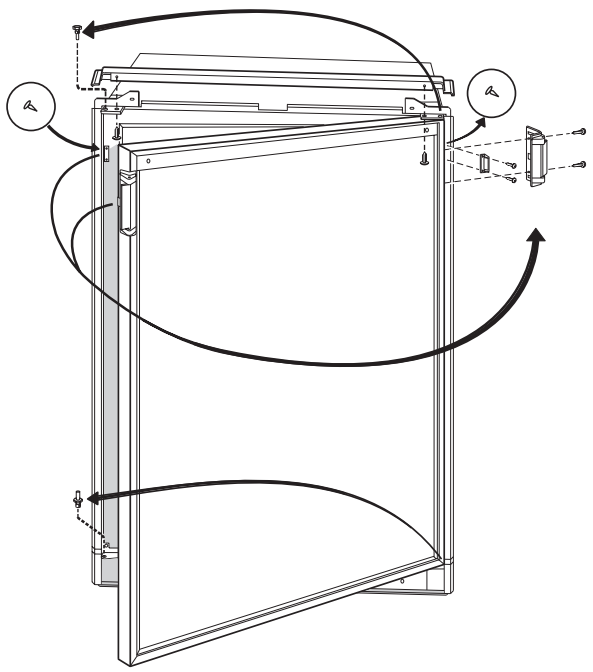

RM2620 & RM2820

To change the door hinges from one side to the other, follow these steps:

1. Open the upper door and remove the two screws holding the top decoration. (The screws are accessible from beneath.)
2. Remove the top hinge pin and lift out the door.
3. Remove center hinge pin and lift out the lower door.
4. Unscrew the bottom hinge pin.
5. Remove the plastic cap from the opposite lower hinge and place it in the hole just "left empty" by the lower hinge pin.
6. Screw the lower hinge pin in the hole from which the plastic cap was removed.
7. Before replacing the doors on the refrigerator, remove the catches and move them to the opposite side of the cabinet. The holes are covered with plastic caps that must be removed and inserted in the holes that previously held the catches.
8. Unscrew the handles and move them to the opposite side of the door.
9. Insert the plastic caps into the holes left open on the doors. (Plastic caps for empty holes are in the parts bag inside the refrigerator.)
10. Remount the doors and hinge pins in the reverse order of their removal.
11. Before the top decoration is refitted, check that the door closes easily and the gasket seals well on all sides.

FIG 20 - RM2620 & RM2820, REVERSING THE DOOR SWING

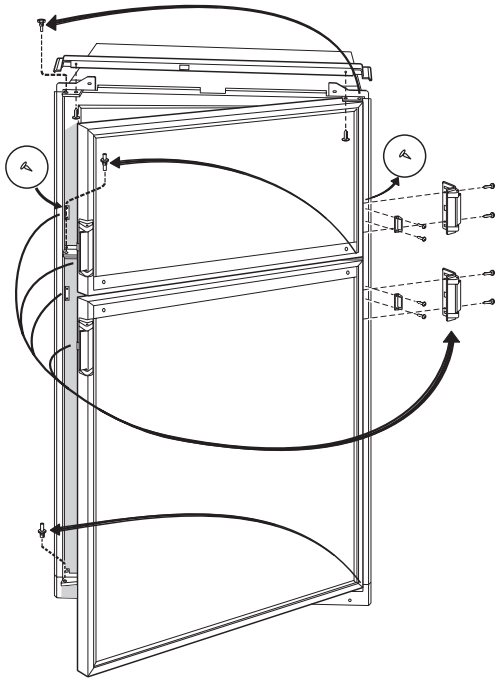

INSTALLING THE DOOR PANEL(S)

Before starting the mounting work, read this section thoroughly. Make sure the panel dimensions are in compliance with those given in "PANEL DIMENSIONS". After having mounted the panel(s) as described in "MOUNTING INSTRUCTIONS", install the handles. For installation instructions for RM3762 & RM3962 (stainless steel doors) and for NDM1062, see "INSTALLING THE DOOR HANDLES".

DOOR PANEL DIMENSIONS

RM2351, RM2354, RM2410, RM2451, RM2454, RM2510, RM2620, DM2652, DM2662, DM2663, RM2551, RM2554, RM3762, RM2820, DM2852, DM2862, RM3962 & NDM1062

PANEL DIMENSIONS MAX. THICKNESS 5/32"				
	HEIGHT		WIDTH	
	MAX	MIN	MAX	MIN
UPPER DOOR				
DM2652 DM2662 DM2663 DM2852 DM2862 NDM1062	15-27/32	15-25/32	20-3/4	20-5/8
RM2620	12-3/64	11-31/32	20-9/32	20-13/64
RM2820	14-7/8	14-51/64	22-11/64	22-3/32
RM3762 RM3962	17-3/64	16-31/32	23-25/32	23-11/16
LOWER DOOR / SINGLE DOOR				
RM2351 RM2354	26-17/64	26-3/16	19-5/8	19-17/32
RM2410	27-7/16	27-23/64	20-9/32	20-13/64
RM2510	35-5/16	35-15/64	20-9/32	20-13/64
RM2620	32-1/4	32-5/32	20-9/32	20-13/64
RM2820	35-5/16	35-15/64	22-11/64	22-3/32
RM2451 RM2454 DM2652 DM2662 DM2663	32-9/16	32-1/2	20-3/4	20-5/8
RM2551 RM2554 DM2852 DM2862 NDM1062	38-11/16	38-5/8	20-3/4	20-5/8
RM3762	32-7/16	32-23/64	23-25/32	23-11/16
RM3962	41-39/64	41-9/16	23-25/32	23-11/16

DOOR PANEL DIMENSIONS CONT'D

RM1350

PANEL DIMENSIONS MAX. THICKNESS 5/32"				
	HEIGHT		WIDTH	
	MAX	MIN	MAX	MIN
UPPER DOOR				
RM1350M RM1350SLM RM1350MIM RM1350WIM RM1350WID (left)	19-7/32	19-9/64	15-43/64	15-19/32
RM1350WID (right)	9-9/32	9-13/64	15-43/64	15-19/32
LOWER DOOR				
RM1350M RM1350SLM RM1350MIM RM1350WIM (right) RM1350WID	40-1/32	39-31/32	15-43/64	15-19/32

RM1350WIM (left)

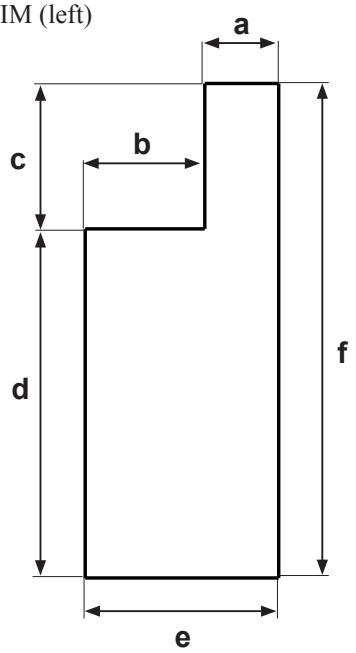

a		b	
max	min	max	min
5-63/64	5-29/32	9-49/64	9-11/16

c		d	
max	min	max	min
11-55/64	11-49/64	28-17/64	28-3/16

e		f	
max	min	max	min
15-43/64	15-19/32	40-1/32	39-31/32

NDA1402

MODELS EQUIPPED WITH ICE MAKER

FIG 21 - PANEL DIMENSIONS FOR THE FREEZER DOOR

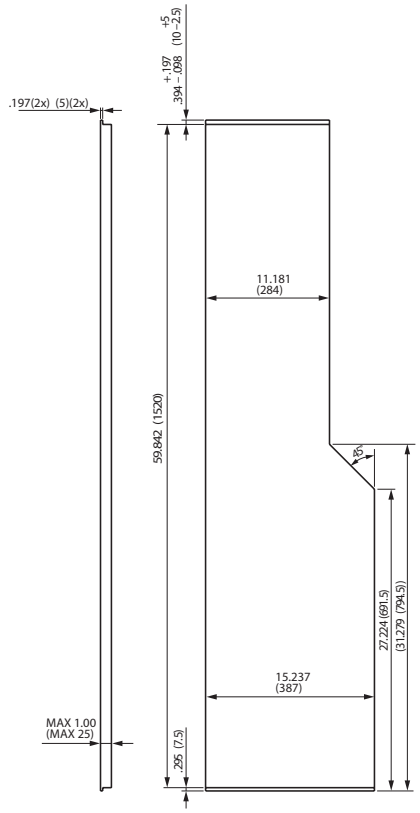

FIG 22 - PANEL DIMENSIONS FOR THE FRIDGE DOOR

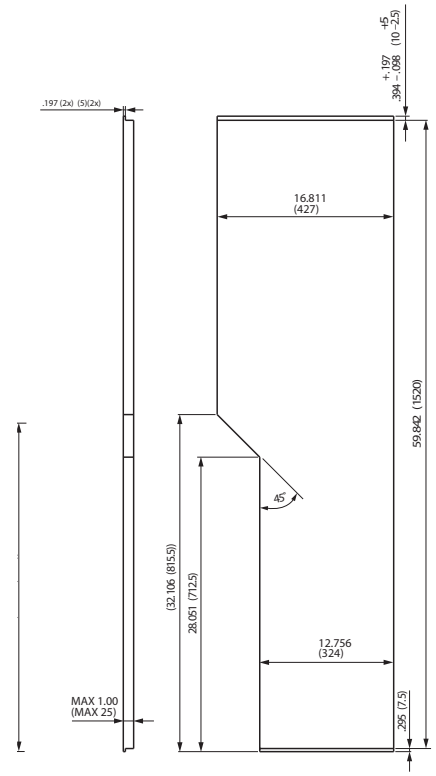

DOOR PANEL DIMENSIONS CONT'D

NDA1402

MODELS EQUIPPED WITH ICE DISPENSER / ICE & WATER DISPENSERS

FIG 23 - PANEL DIMENSIONS FOR THE FREEZER DOOR

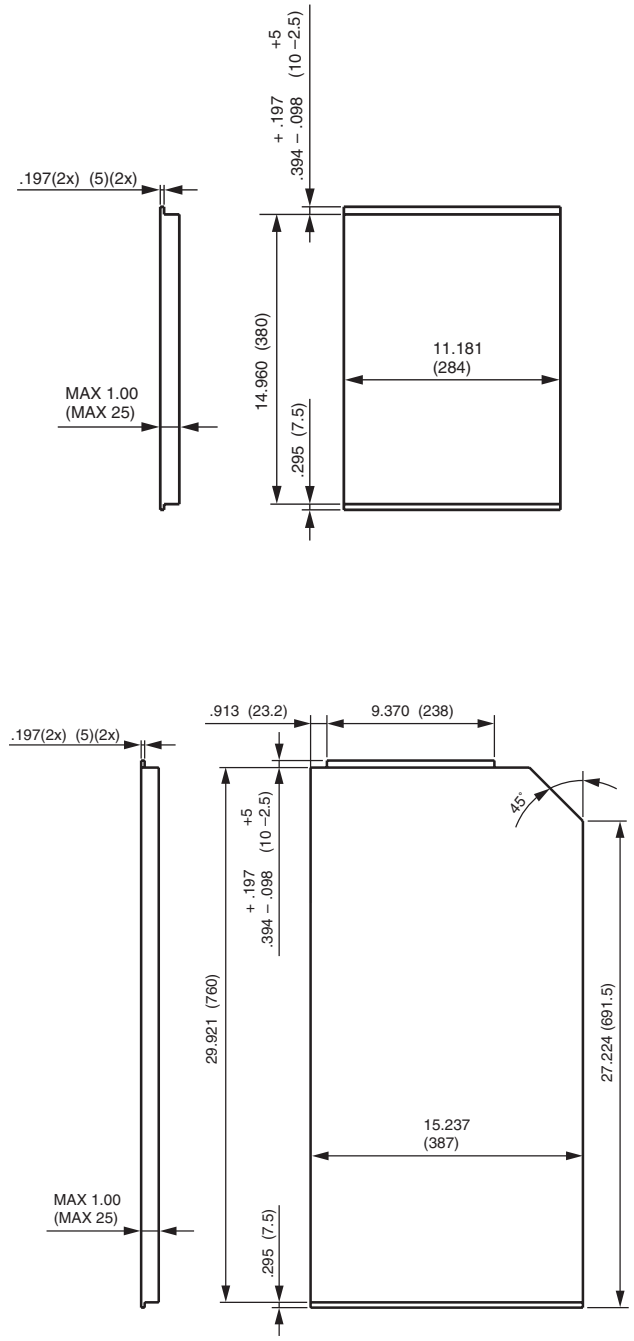

FIG 24 - PANEL DIMENSIONS FOR THE FRIDGE DOOR

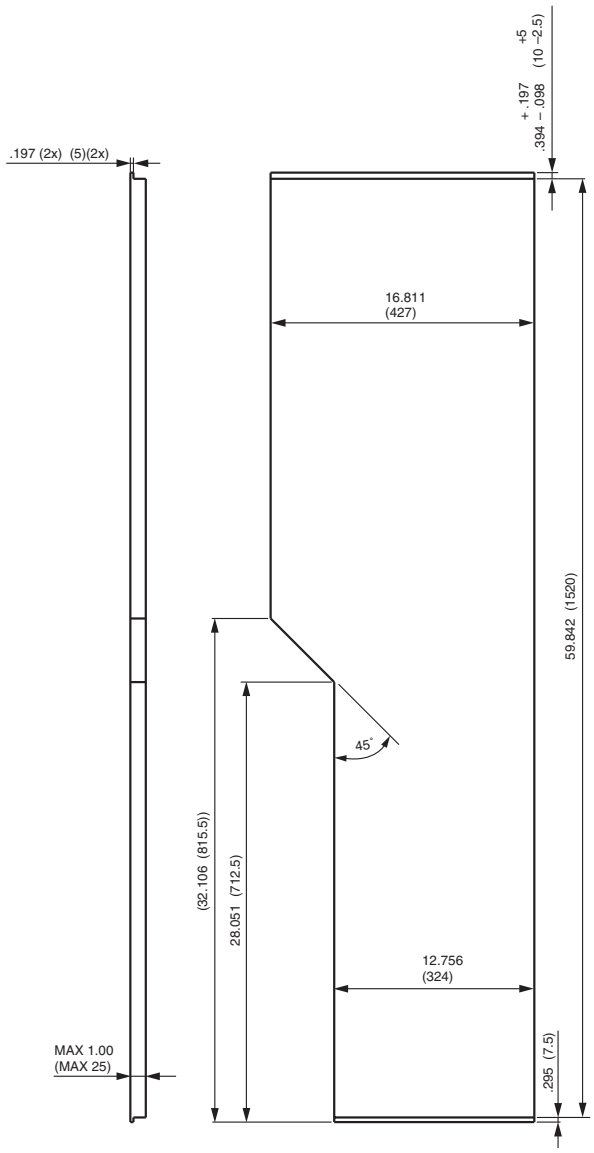

DOOR PANEL INSTALLATION CONT'D

MOUNTING INSTRUCTIONS

RM2351, RM2354, RM2451, RM2454, RM2551, RM2554, DM2652, DM2662, DM2663, DM2852, DM2862 & NDM1062

To install the panel(s), follow these steps:

1. Open the door 90 degrees.
2. Locate decoration strips. These are taped to one of the shelves or to the inside of the door. Loosen tape and remove strips.
3. Insert the vertical edges into the grooves of the door frame. Push the panel downwards so that the lower horizontal edge of the panel is fitted into the bottom groove (FIG 25).
4. Fasten the decoration strips:
   - Screws: Secure decoration strip with three screws (FIG 26).
   - Snap-in: Snap in the decoration strips (FIG 27).

FIG 25

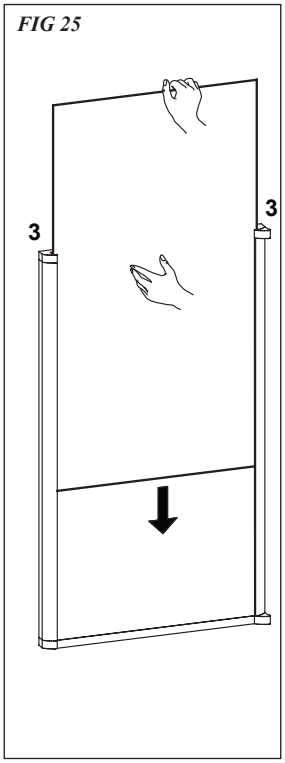

FIG 26

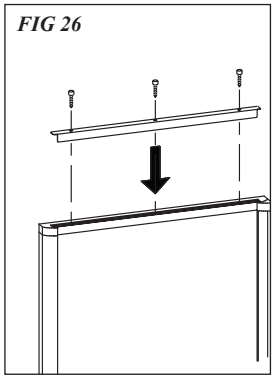

FIG 27

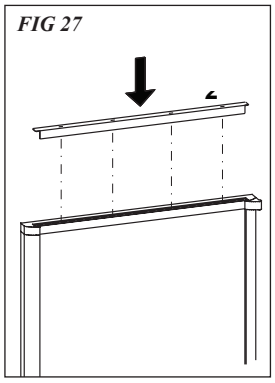

RM2410, RM2510, RM2620 & RM2820

To install the door panel, follow these steps:

1. Open the door 90 degrees.
2. Locate decoration strips. On some refrigerators, the decoration strip is taped inside the door; if installed on the door, remove the door decoration strip (2) by removing its two screws (1).
3. Insert one vertical edges into the groove of the door frame (3).
4. Bend the panel gently so that the free side of the panel can be slipped into the corresponding groove of the door frame (4). Slide the panel down into the groove of the bottom frame (5).
5. Between the upper edge of the panel and the door frame there is a gap which should be covered by the decoration strip.
6. Put the decoration strip across the door so that the gap is covered and push it upward (6). The tabs on the inside of the strip should fit behind the flange of the door frame.
7. Secure the decoration strip with the two screws removed in step 1.

FIG 28 - DOOR PANEL

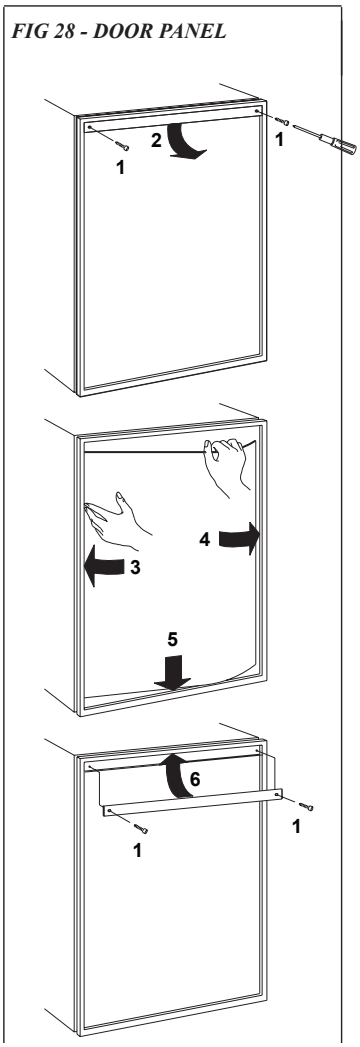

DOOR PANEL INSTALLATION CONT'D

RM3762 & RM3962

To install the door panels, follow these steps:

1. Remove the decoration strip by inserting a finger in the plastic profile and pull.

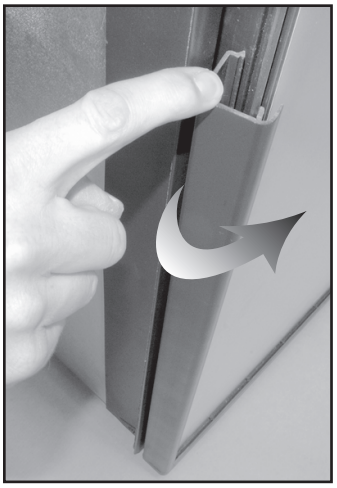

2. Open the door 90 degrees.
3. Insert the door panel's edges into the grooves of the door frame. Push the panel sideways until the edge of the panel is fitted into the opposite side groove.

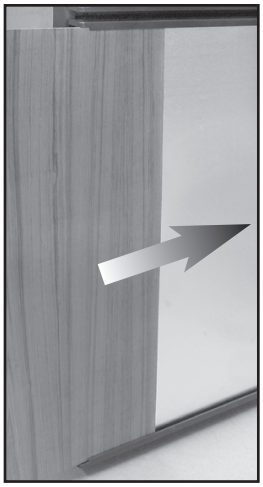

4. Snap on the decoration strip.

5. Snap on the handle.

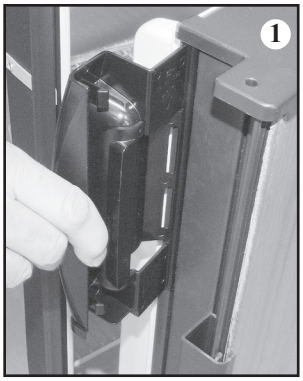

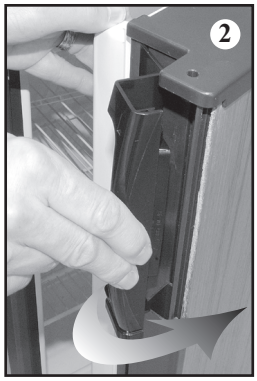

REPLACING THE DOOR PANELS

To replace a mounted door panel, follow these steps:

1. Detach the handle by using a flat blade screwdriver to gently push the two tabs away.

2. Remove decoration strip and door panel.
3. Install the new panel according to the previous instruction, steps 3-5.

DOOR PANEL INSTALLATION CONT'D

RM1350 & RM1350SL

To install the door panels, follow these steps:

1. Open the door.
2. Remove the screw (A). Slide off the handle (B).*

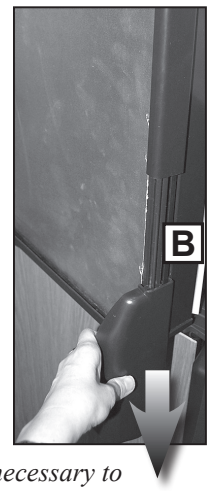

** For RM1350WID it is not necessary to remove the right freezer door handle in order to mount the door panel.*

3. Slide off the decoration strip.

4. Insert the door panel's edges into the grooves of the door frame.

   Push the panel sideways until the edge of the panel is fitted into the opposite side groove.

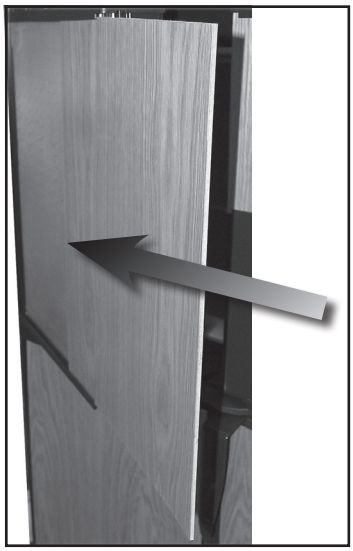

5. Put back the decoration strip. Slide (A) or snap (B) into place.

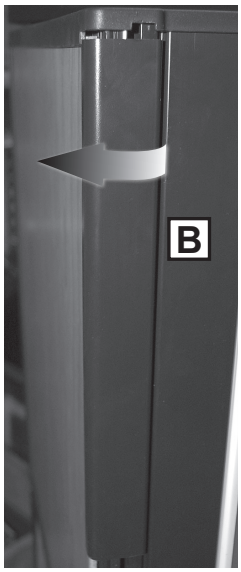

6. Slide the handle into place (A) and attach with the screw (B).

DOOR PANEL INSTALLATION CONT'D

NDA1402

MODELS EQUIPPED WITH ICE MAKER

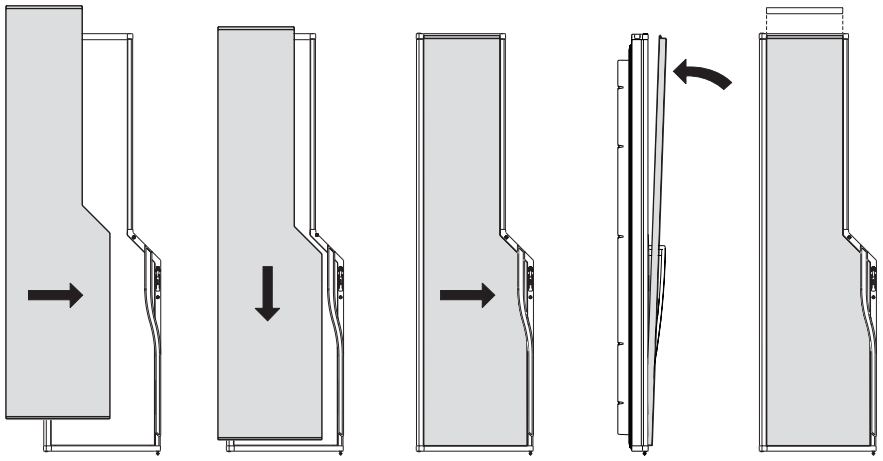

NDA1402

MODELS EQUIPPED WITH ICE DISPENSER / ICE & WATER DISPENSERS

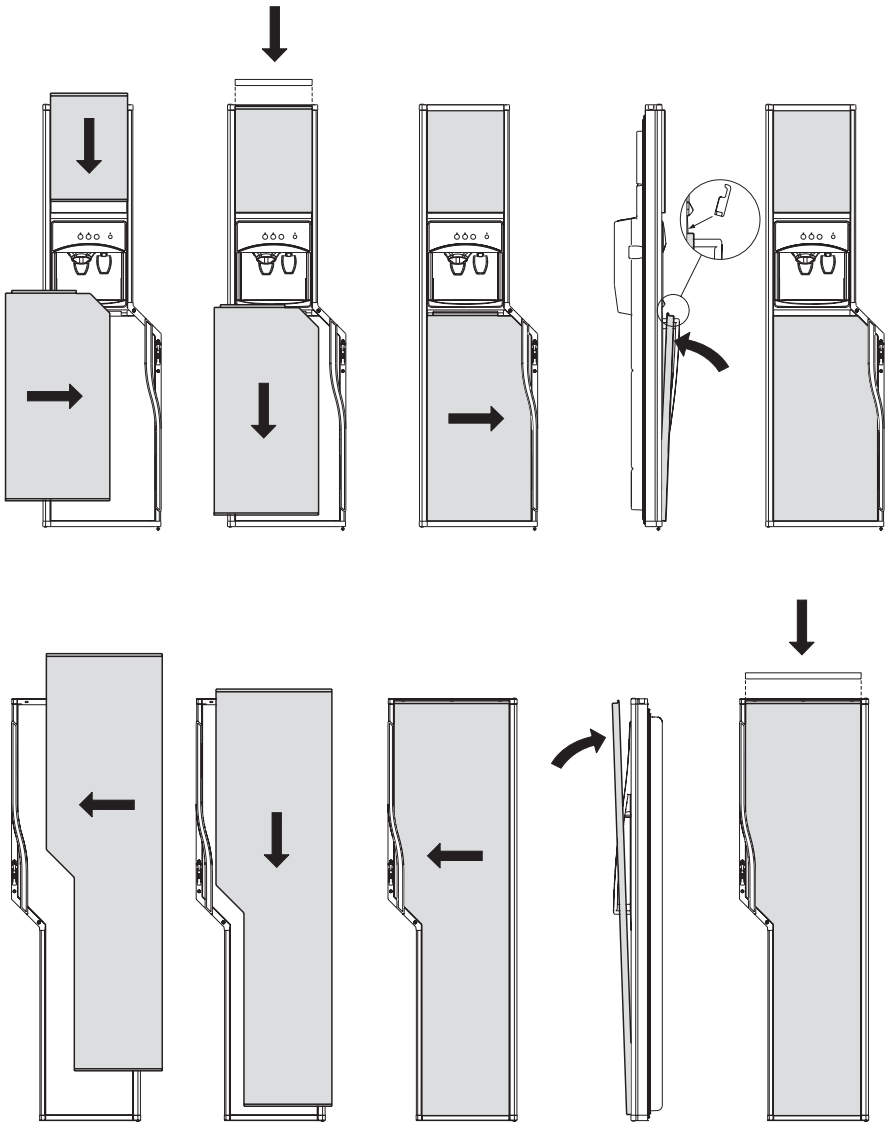

INSTALLING THE DOOR HANDLES

RM3762 & RM3962 - Stainless steel doors

To install the door handles, follow these steps:

1. Snap on the handle by inserting its two tabs in the slot and slide into place.

2. Attach the handle with two screws.

NDM1062

To install the door handles, follow these steps:

1. Locate the plastic bag containing the handles and screws.
2. Open freezer door.
3. Position handle. Align the holes in the handle with the holes in the frame.

Door insert panels

Stainless steel doors

4. While holding handle firmly against the door, fasten screws with a Phillips screwdriver. Close the door.

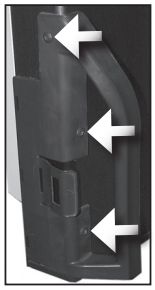

5. Open fridge door and repeat steps 3 and 4 to install the second handle.

APPENDIX A - OVERALL & ROUGH IN DIMENSIONS FOR ENCLOSURE

	OVERALL DIMENSIONS			ENCLOSURE DIMENSIONS		
MODEL	Height (A)	Width (B)	Depth (C)	Height (H)	Width (W)	Depth (D)
RM2351	30-5/32	21-7/8	22-22/32	29-3/4	20-1/2	21-1/2
RM2354	30-5/32	21-7/8	22-22/32	29-3/4	20-1/2	21-1/2
RM2410	33-1/2	22-53/64	24-7/8	32-7/16	21-13/16	24-7/32
RM2451	37-3/8	24-7/8	24-11/16	36-1/2	23-11/16	24
RM2454	37-3/8	24-7/8	24-11/16	36-1/2	23-11/16	24
RM2510	40-29/32	22-53/64	24-7/8	40-5/16	21-13/16	24-7/32
RM2551	43-1/2	24-7/8	24-11/16	42-5/8	23-11/16	24
RM2554	43-1/2	24-7/8	24-11/16	42-5/8	23-11/16	24
RM2620	51-31/32	22-23/32	24-9/16	49-17/32	21-13/16	24-7/32
DM2652	54-21/32	24-7/8	26-1/32	53-3/4	23-11/16	24[3]
DM2662	54-21/32	24-7/8	26-1/32	53-3/4	23-11/16	24[3]
DM2663	54-21/32	24-7/8	26-1/32	53-3/4	23-11/16	24[3]
RM3762	54-3/4	25-5/64	26-1/16	53-3/4	23-11/16	24[3]
RM2820	57-7/8	24-39/64	24-9/16	55-7/16	23-11/16	24[3]
DM2852	60-51/64	24-7/8	26-1/32	59-15/16	23-11/16	24[3]
DM2862	60-51/64	24-7/8	26-1/32	59-15/16	23-11/16	24[3]
RM3962	63-15/16	25-5/64	26-1/16	62-61/64	23-11/16	24[3]
NDM1062	60-54/64	24-7/8	26-5/8	59-15/16	23-11/16	24[3]
RM1350	64-17/64	33-11/16	28-1/16[1], 29-1/2[2]	63-3/16	32-3/4	26-1/16[4]
RM1350SL	64-17/64	33-11/16	26-1/16[1], 27-1/2[2]	63-3/16	32-3/4	24-1/16[4]
NDA1402	64-17/64	33-11/16	29-5/8	63-3/16	32-3/4	26-1/16[4]

[1] Steel doors
[2] Door insert panels
[3] Add 1" depth for units with one or two optional ventilator fans.
[4] Units with factory installed fans may require 1" additional depth.

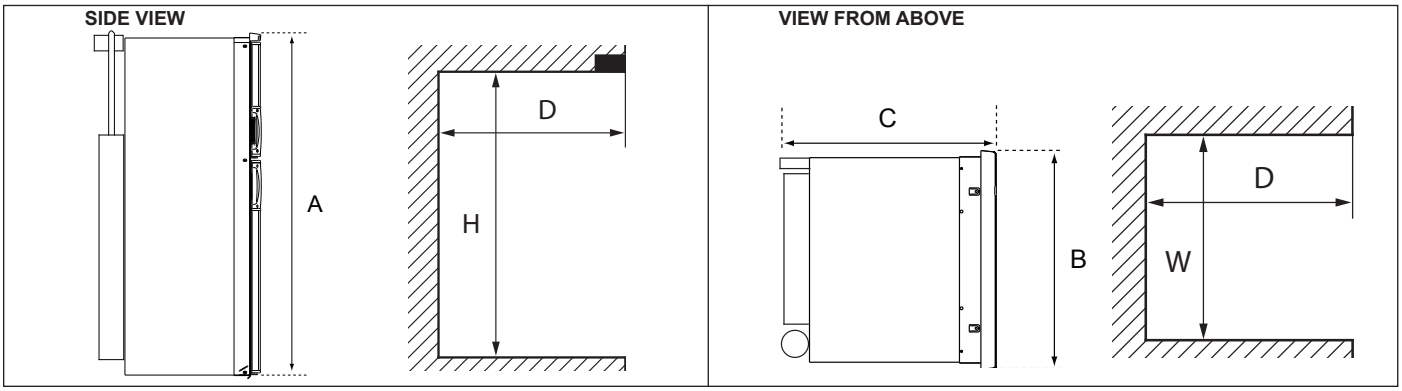

APPENDIX B - MINIMUM VENTILATION HEIGHTS

MINIMUM VENTILATION HEIGHTS B1 = ROOF VENT & LOWER SIDE VENT B2 = UPPER & LOWER SIDE VENT		
RM2351	B1	31
	B2	28
RM2354	B1	31
	B2	28
RM2410	B1	34
	B2	38
RM2451	B1	37-3/4
	B2	36
RM2454	B1	37-3/4
	B2	36
RM2510	B1	42
	B2	38
RM2551	B1	44-1/2
	B2	42
RM2554	B1	44-1/2
	B2	42
RM2620	B1	57-3/4
	B2	49
DM2652	B1	57-3/4
	B2	56
DM2662	B1	57-3/4
	B2	56
DM2663	B1	57-3/4
	B2	56
RM3762	B1	57-3/4
	B2	56
RM2820	B1	63-3/4
	B2	57
DM2852	B1	63-3/4
	B2	61
DM2862	B1	63-3/4
	B2	61
RM3962	B1	66-13/16
	B2	63
NDM1062	B1	63-3/4
	B2	61
RM1350	B1	69-1/8
	B2	63
RM1350SL	B1	69-1/8
	B2	63
NDA1402	B1	69-1/8
	B2	63

NOTE! Ventilation height should be measured from the seam between the frame and door of the lower side wall vent to the top of the roof opening (B1) or to top of the uppermost row of louvers on the upper side wall vent (B2).

B1

ROOF VENT & LOWER SIDE VENT

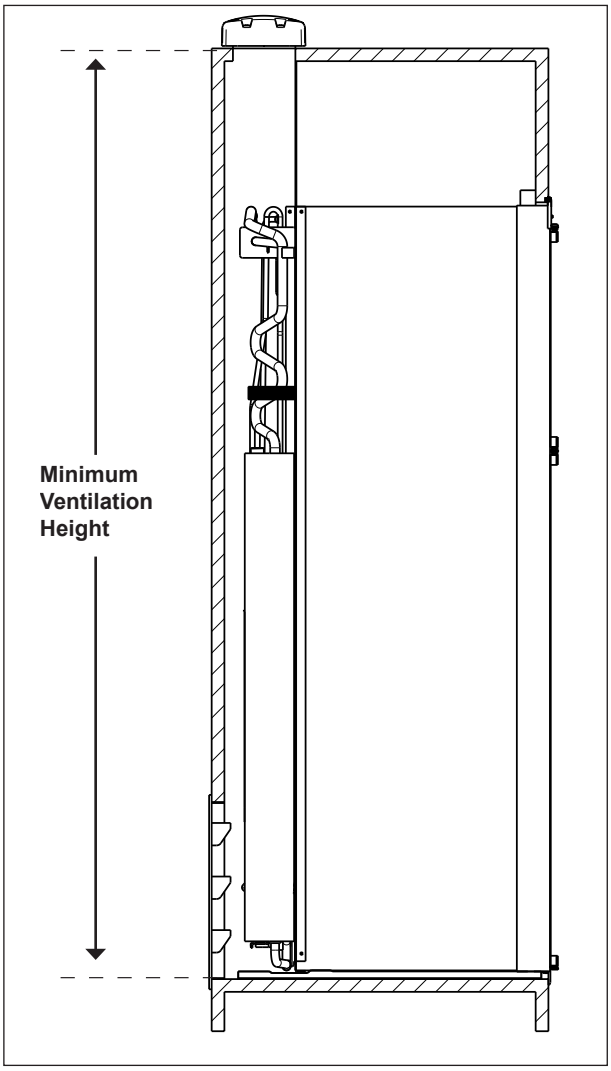

B2

UPPER & LOWER SIDE VENT

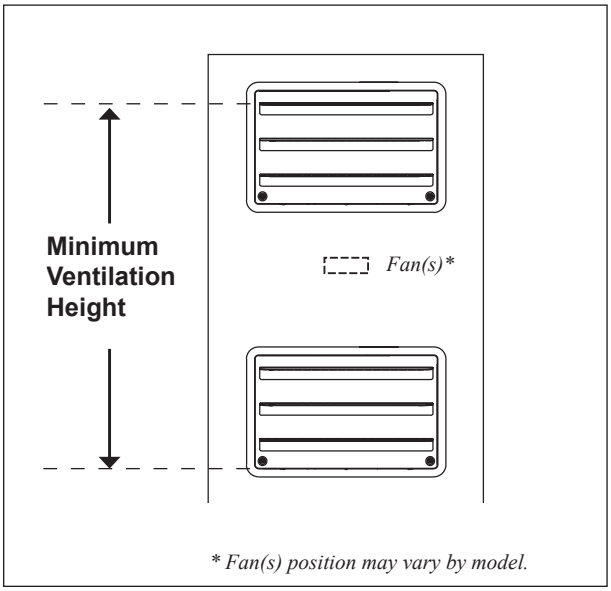

APPENDIX C - APPROVED VENTS

Refer to the table below for information on which vents and fans (if applicable) to use. The part numbers are displayed on pages 32-34.

Start by locating the refrigerator model in question, e.g. RM2351 and then, select vent application type. In this case, numbers **1** and **2** indicate that Roof Vent (1) and Side Vent (2 or 3) could be installed. As another example, when selecting model DM2652 with an upper and lower side vent application, use Upper Side Vent (2 or 3) and Lower Side Vent (2 or 3).

INST. TYPE / MODEL	ROOF VENT APPLICATION			UPPER & LOWER SIDE APPLICATION			ISLAND APPLICATION		CORNER APPLICATION			
	Roof Vent	Lower Side Vent	Fan	Upper Side Vent	Lower Side Vent	Fan	Roof Vent	Fan	Roof Vent	Upper Side Vent	Lower Side Vent	Fan
RM2351	1	2, 3	9**	8, 4*, 5*	8, 6*	9**	1	9	1	8, 5**	8, 6*	9
RM2354	1	2, 3	9**	8, 4*, 5*	8, 6*	9**	1	9	1	8, 5**	8, 6*	9
RM2410	1	2, 3	9**	2, 3, 8*, 5*	2, 3, 8*, 6*	9**	1	9	1	2, 3, 8*, 5*	2, 3, 8*, 6*	9
RM2451	1	2, 3	9**	2, 3, 8*, 5*	2, 3, 8*, 6*	9**	1	9	1	2, 3, 8*, 5*	2, 3, 8*, 6*	9
RM2454	1	2, 3	9**	2, 3, 8*, 5*	2, 3, 8*, 6*	9**	1	9	1	2, 3, 8*, 5*	2, 3, 8*, 6*	9
RM2510	1	2, 3	9**	2, 3, 8*, 5*	2, 3, 8*, 6*	9**	1	9	1	2, 3, 8*, 5*	2, 3, 8*, 6*	9
RM2551	1	2, 3	9**	2, 3, 8*, 5*	2, 3, 8*, 6*	9**	1	9	1	2, 3, 8*, 5*	2, 3, 8*, 6*	9
RM2554	1	2, 3	9**	2, 3, 8*, 5*	2, 3, 8*, 6*	9**	1	9	1	2, 3, 8*, 5*	2, 3, 8*, 6*	9
RM2620	1	2, 3	10**	2, 3	2, 3	10	1	10	1	2, 3	2, 3	10
DM2652	1	2, 3	10**	2, 3	2, 3	10	1	10	1	2, 3	2, 3	10
DM2662	1	2, 3	10**	2, 3	2, 3	10	1	10	1	2, 3	2, 3	10
DM2663	1	2, 3	10**	2, 3	2, 3	10	1	10	1	2, 3	2, 3	10
RM3762	1	2, 3	10**	2, 3	2, 3	10	1	10	1	2, 3	2, 3	10
RM2820	1	2, 3	10**	2, 3	2, 3	10	1	10	1	2, 3	2, 3	10
DM2852	1	2, 3	10**	2, 3	2, 3	10	1	10	1	2, 3	2, 3	10
DM2862	1	2, 3	10**	2, 3	2, 3	10	1	10	1	2, 3	2, 3	10
RM3962	1	2, 3	10**	2, 3	2, 3	10	1	10	1	2, 3	2, 3	10
NDM1062	1	2, 3	10**	2, 3	2, 3	10	1	10	1	2, 3	2, 3	10
RM1350	1	7	***	7	7	***	1	***	1	7	7	***
RM1350SL	1	7, 2, 3	***	7, 2, 3	7, 2, 3	***	1	***	1	7, 2, 3	7, 2, 3	***
NDA1402	1	7	***	7	7	***	1	***	1	7	7	***

*Optional vents may be used in applications where the preferred vent cannot be used.

**Optional fan. Note that some models can be purchased with factory installed fan(s).

***Fan(s) are factory installed on these models.

APPENDIX C - APPROVED VENTS

1

PLASTIC ROOF VENT

No 3311236.xxx*

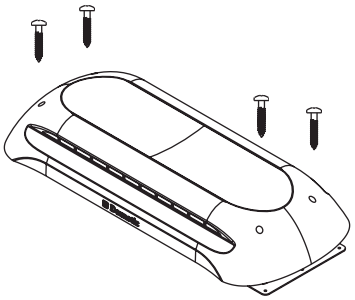

Cutout: 6-1/2” x 23-3/4”

2

UPPER & LOWER PLASTIC SIDE VENT

No 3109350.xxx*

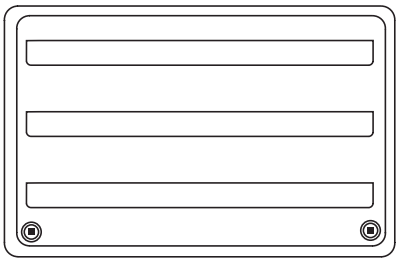

Cutout: 13-3/4” x 21-9/16”

3

UPPER & LOWER PLASTIC SIDE VENT

No 13001
No 13003

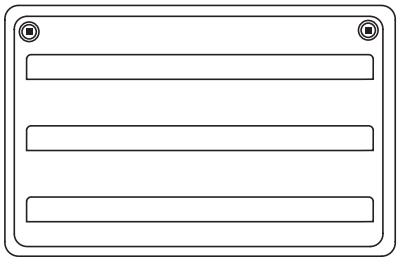

Cutout: 13-3/4” x 21-9/16”

4

UPPER METAL SIDE VENT

No 3100451.xxx*

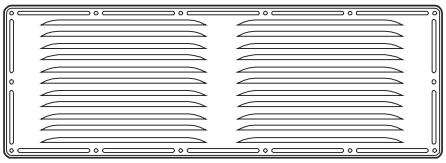

Cutout: 7-3/4” x 19-1/4”

**Suffix “xxx” should be replaced by a color code*

APPENDIX C - APPROVED VENTS

5

UPPER METAL SIDE VENT

No 8030122.xxx*

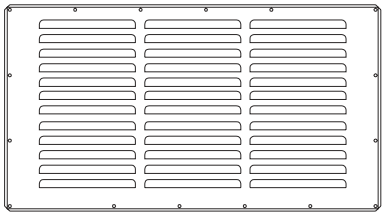

Cutout: 10-1/4” x 21”

6

LOWER METAL SIDE VENT

No 3102364.xxx*
No 8030211.xxx*

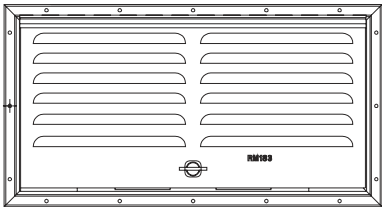

Cutout: 9-11/16” x 19-1/4”

7

UPPER & LOWER PLASTIC SIDE-BY-SIDE VENT

No 3109349.xxx*

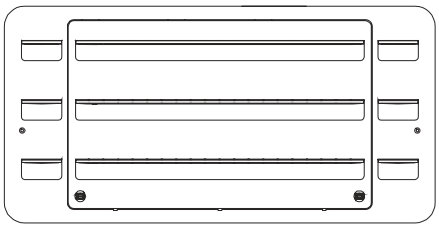

Cutout: 13-5/8” x 28-5/8”

8

UPPER & LOWER PLASTIC SIDE VENT

No 3109492.xxx*

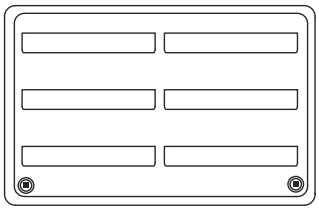

Cutout: 9-11/16” x 19-1/4”

**Suffix “xxx” should be replaced by a color code*

9

FAN

(INNOVATOR REFRIGERATOR VENTILATION SYSTEM*)

Part No 3108705.751

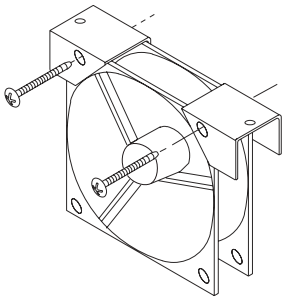

10

FAN

(INNOVATOR REFRIGERATOR VENTILATION SYSTEM*)

Part No 3108705.744

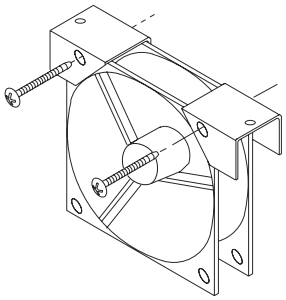

*Patent #5,355,693

11

Z-BRACKET

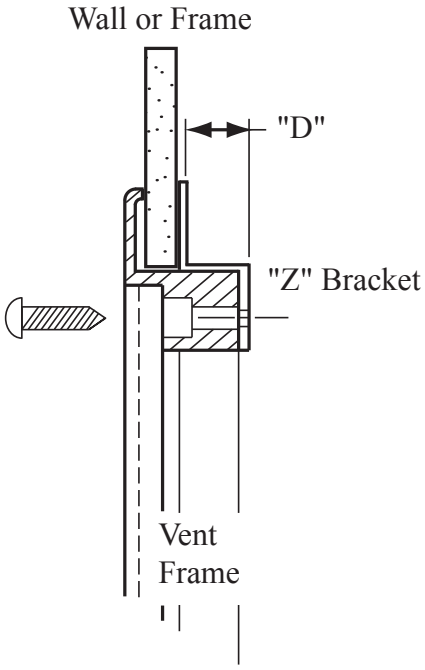

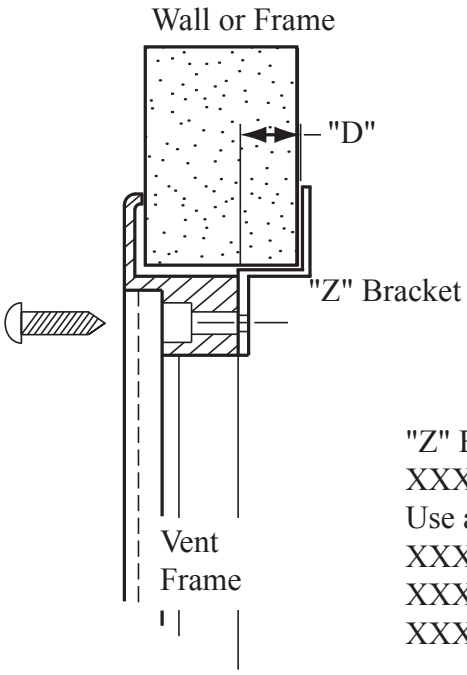

"Z" Bracket 3103812.
XXX
Use appropriate "D"
XXX = 016 = .62"
XXX = 024 = .81"
XXX = 040 = .19"

APPENDIX D - VENT INSTALLATION PROCEDURES

Reference "APPENDIX C" for Approved Vents.

All fasteners referenced herein are to be provided by the installer. The screw types selected should be appropriate for the application for which they are being used. For example; wood screw thread type for wood engagement, self tapping screw thread type for metal engagement, and plastic screw thread type for plastic engagement. Unless otherwise noted, minimize lengths to fit applications appropriately. Rivets are acceptable for use only where noted.

- **APPLY SEALANT AROUND THE THREAD OR RIVET BODY OF ALL FASTENERS.**
- **APPLY DRY SEALANT AROUND SURFACE MOUNTING FACE OF ALL VENT FRAMES OR VENT BASES PRIOR TO INSTALLATION.**
- **APPLY WET SEALANT AROUND PERIMETER OF ALL VENT FRAMES OR VENT BASES AFTER INSTALLATION. ENSURE THAT SEALANT DOES NOT BLOCK THE MOLDED WEEP TRACKS IN THE VENT FRAME.**

1 ROOF VENT (CAP & BASE) - PART # 3311236.XXX

a) Center the base over the 6 ½" x 23 ¾" cutout.

b) Secure using sixteen #10 screws.

c) Place cap on top of base.

d) Secure cap to base using four #10 screws. These screws must be a minimum of 1 ¼" long to provide proper engagement.

e) Apply sealant over all the screws.

2 UPPER & LOWER SIDE VENT - PART # 3109350.XXX

a) Place frame into 13 ¾" x 21 9/16" cutout.

b) Secure frame using seven #10 screws through inside flange of frame.
- Alternatively, use seven Z-brackets (see "APPENDIX C") if the cutout is not framed or the wall is laminate construction. Use #10 screws to secure the frame via the Z-brackets.

c) Install the vent door into the frame using the upper tabs as a guide.

d) Lock the vent door into place by fully seating and twisting the black latches in the bottom corners of the vent door.

3 UPPER & LOWER SIDE VENT - PART # 13001 / PART # 13003

a) Place frame into 13 ¾" x 21 9/16" cutout.

b) Secure frame using sixteen #10 screws through inside flange of frame.
Install the vent door into the frame using the lower tabs as a guide.

c) Lock the vent door into place by fully seating and twisting the latches in the top corners of the vent door.

4 UPPER METAL SIDE VENT - PART # 3100451.XXX

a) Place vent over 7 ¾" x 19 ¼" cutout.

b) Secure frame using fourteen #10 screws.
- Alternate use of rivets is acceptable.

5 UPPER METAL SIDE VENT - PART # 8030122.XXX

a) Place vent over 10 ¼" x 21" cutout.

b) Secure frame using sixteen #10 screws.
- Alternate use of rivets is acceptable.

6 LOWER METAL SIDE VENT - PART # 3102364.XXX / PART # 8030211.XXX

a) Place vent over 9 11/16"x 19 ¼" cutout.

b) Secure frame using sixteen #10 screws.
- Alternate use of rivets is acceptable.

7 UPPER & LOWER PLASTIC SIDE-BY-SIDE VENT - PART # 3109349.XXX

a) Place frame into 13 5/8” x 28 5/8” cutout.

b) Secure the frame with five Z-brackets (see “APPENDIX C”) using #10 screws.

c) Install six #10 screws through the front frame (three each end) to further secure frame.

d) Remove screw cap plugs from the vent frame and install over the six screws in the front frame.

e) Install the vent door into frame using upper tabs as a guide.

f) Lock the vent door into place by fully seating and twisting the black latches in the bottom corners of the vent door.

8 UPPER & LOWER PLASTIC SIDE VENT - PART # 3109492.XXX

a) Place frame into 9 11/16” x 19 ¼” cutout.

b) Secure the frame with seven Z-brackets (see APPENDIX C”) using #10 screws.

c) Install the vent door into frame using upper tabs as a guide.

d) Lock the vent door into place by fully seating and twisting the black latches in the bottom corners of the vent door.

RM2351 & RM2354

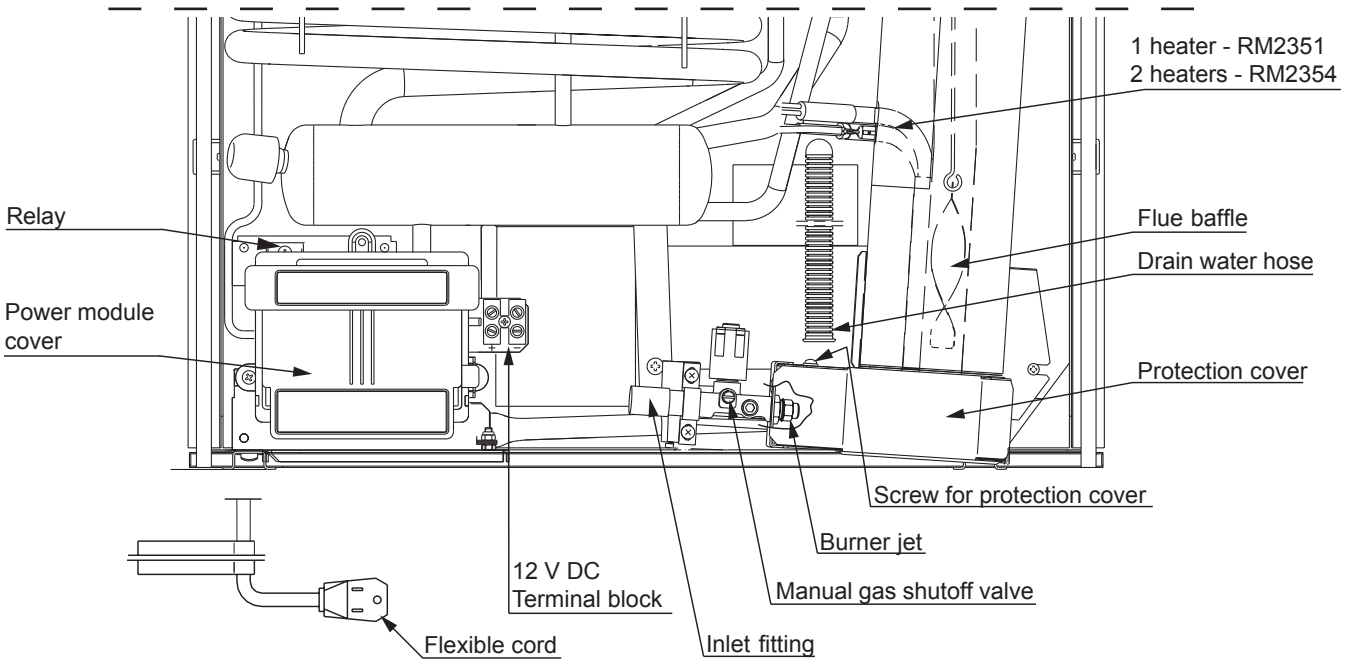

RM2410 & RM2510

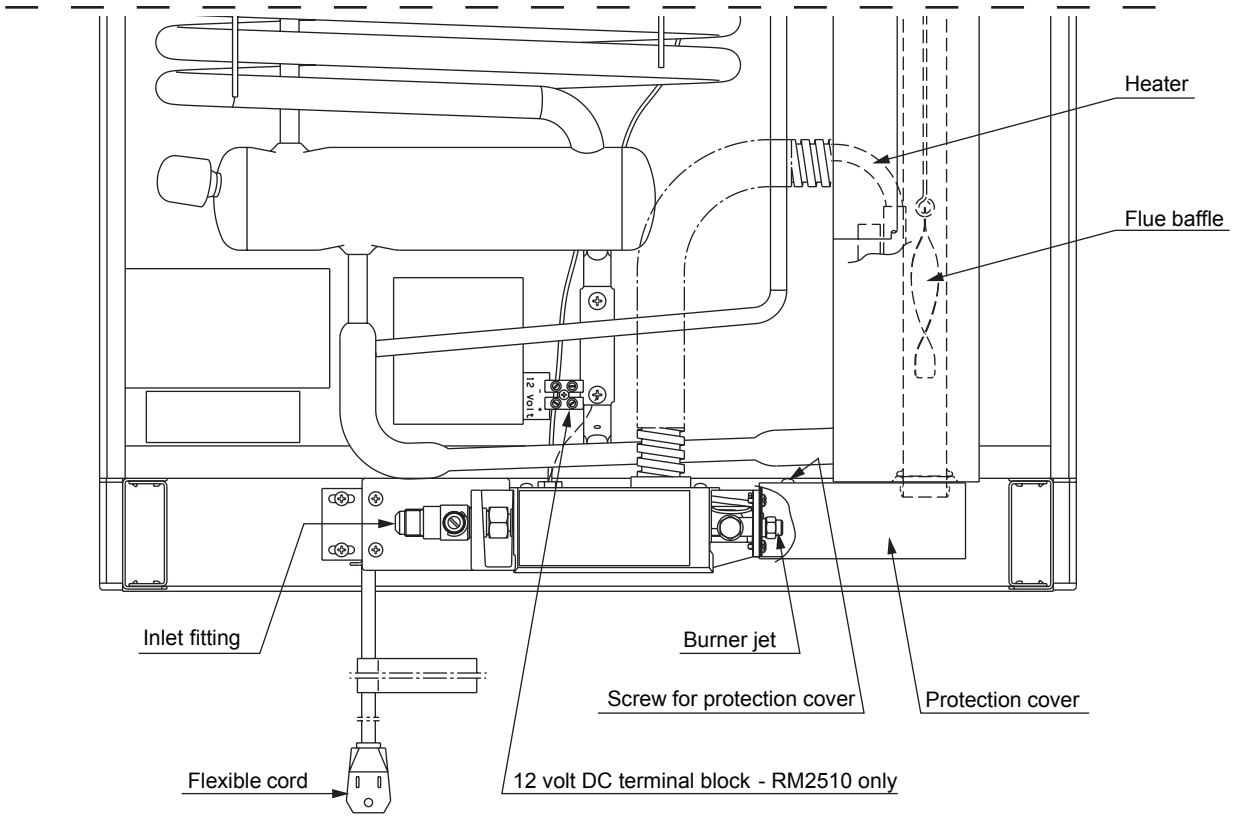

APPENDIX E - REARVIEW EQUIPMENT

RM2451, RM2454, RM2551 & RM2554

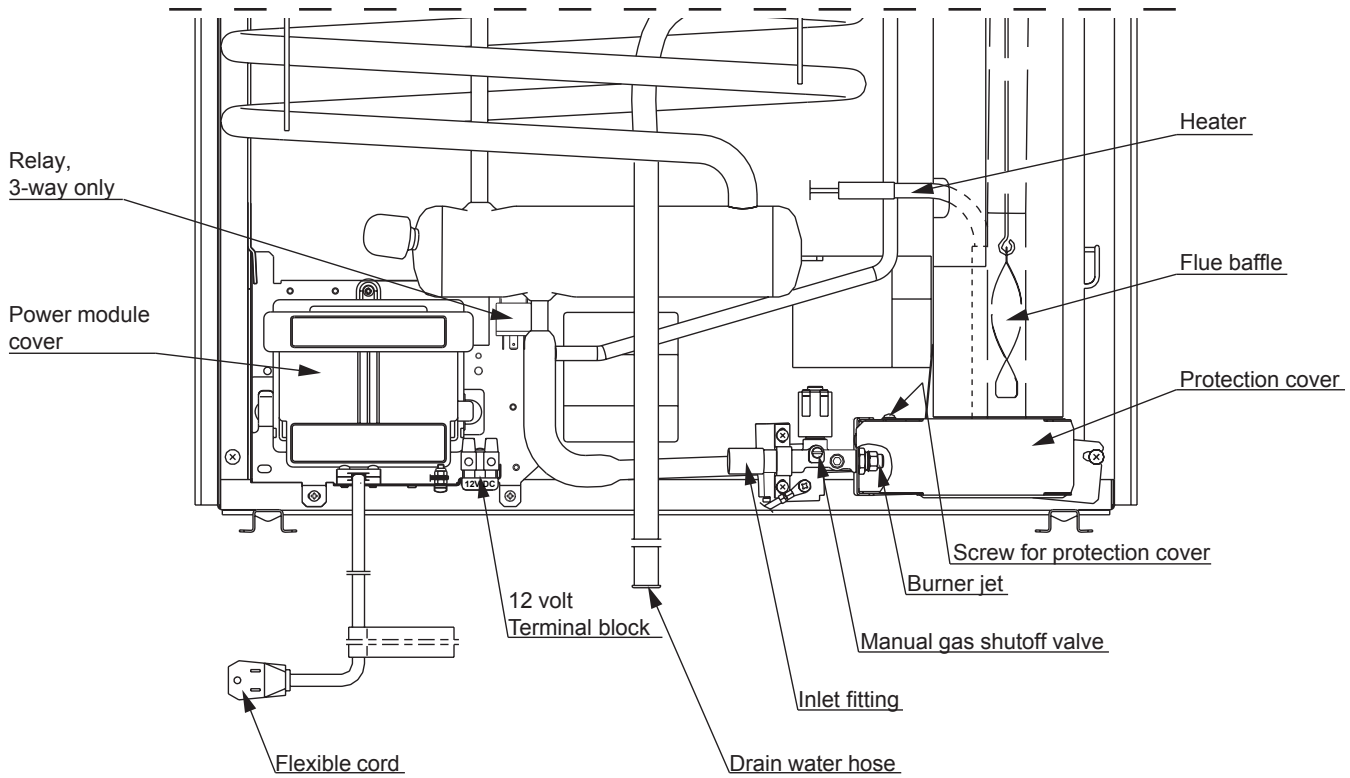

RM2620 & RM2820

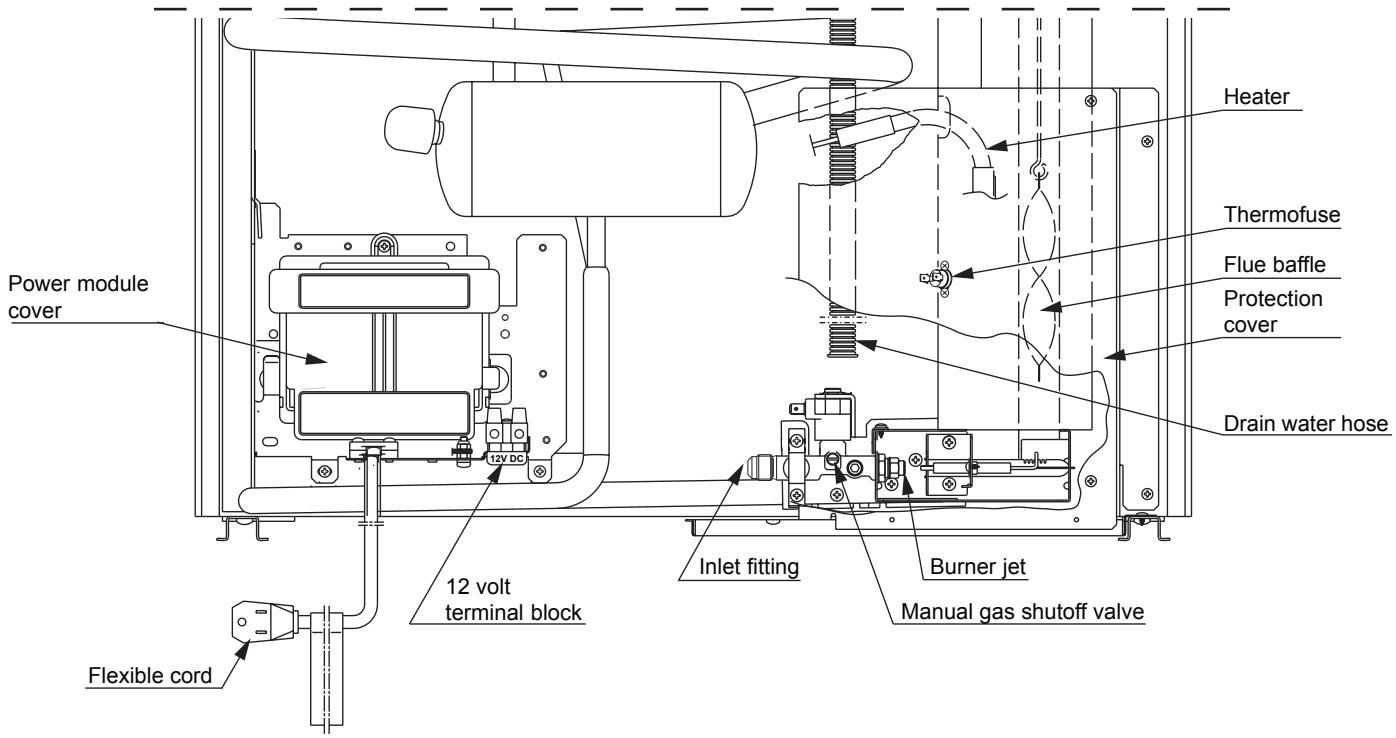

APPENDIX E - REARVIEW EQUIPMENT

DM2652, DM2662, DM2663, DM2852, DM2862 & NDM1062

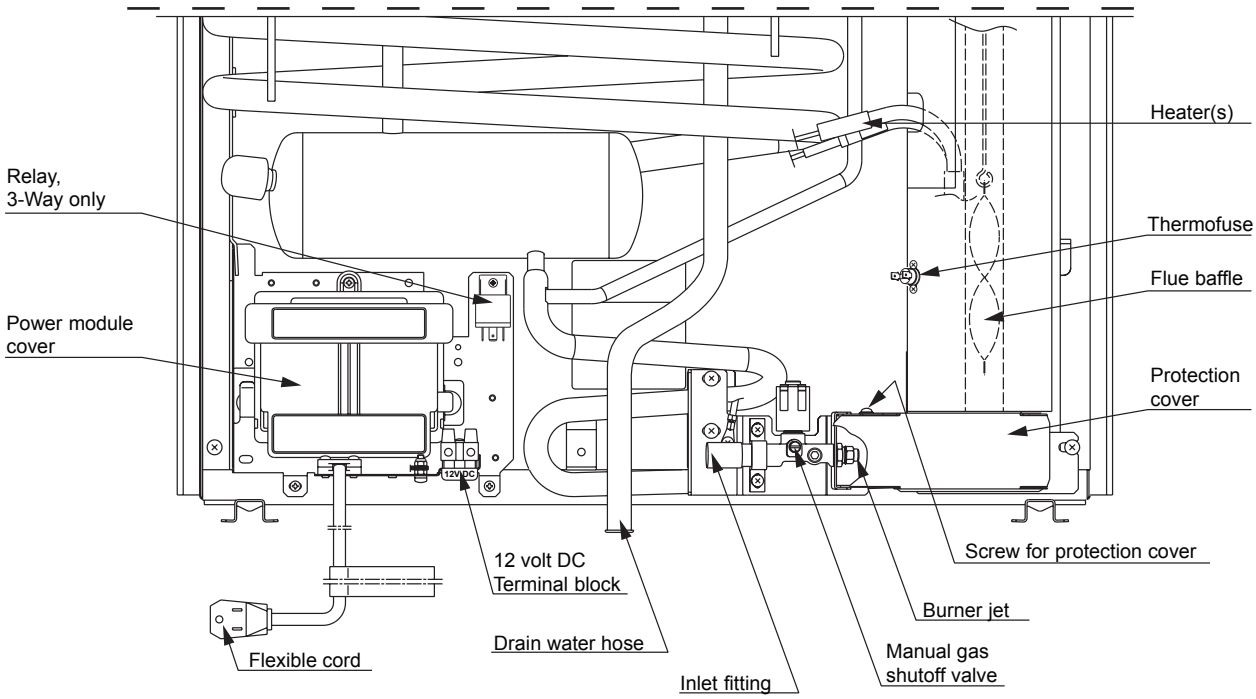

Shown without Secondary Burner Housing for illustrative purposes only.

RM3762 & RM3962

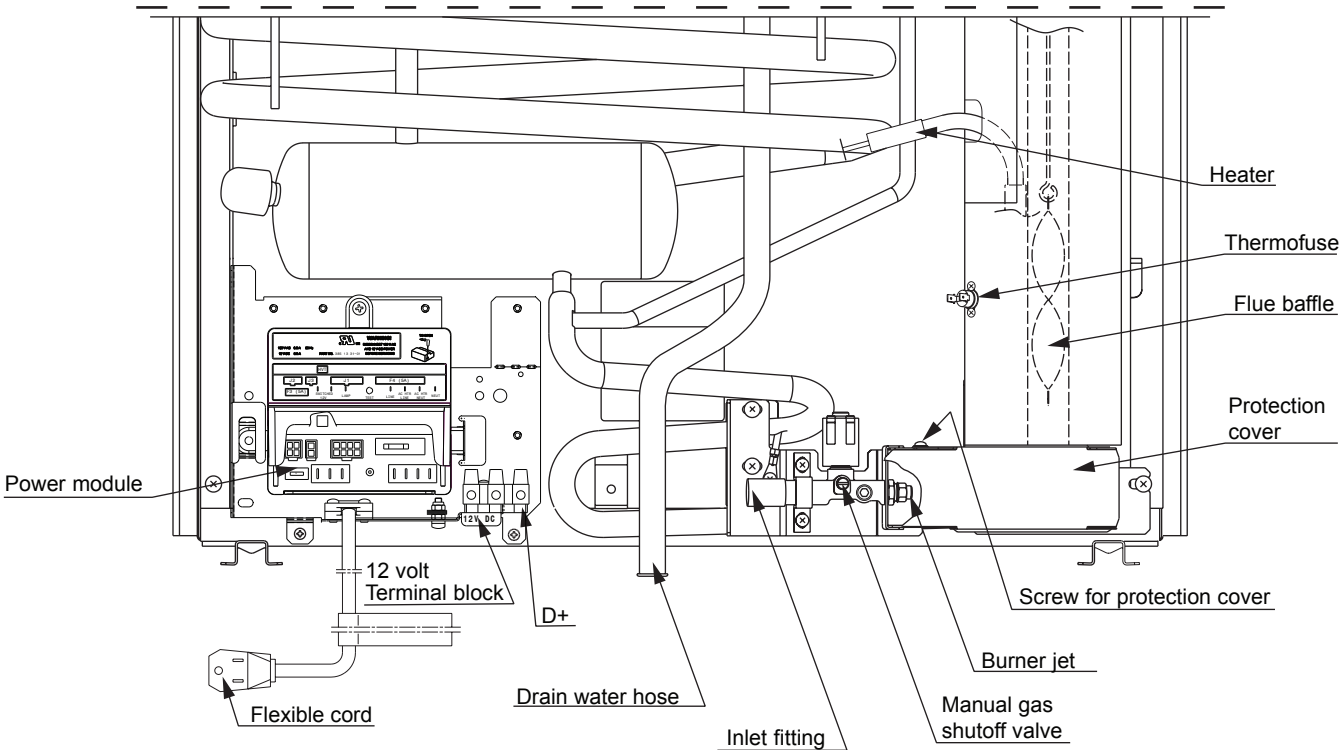

APPENDIX E - REARVIEW EQUIPMENT

RM1350M & RM1350SLM

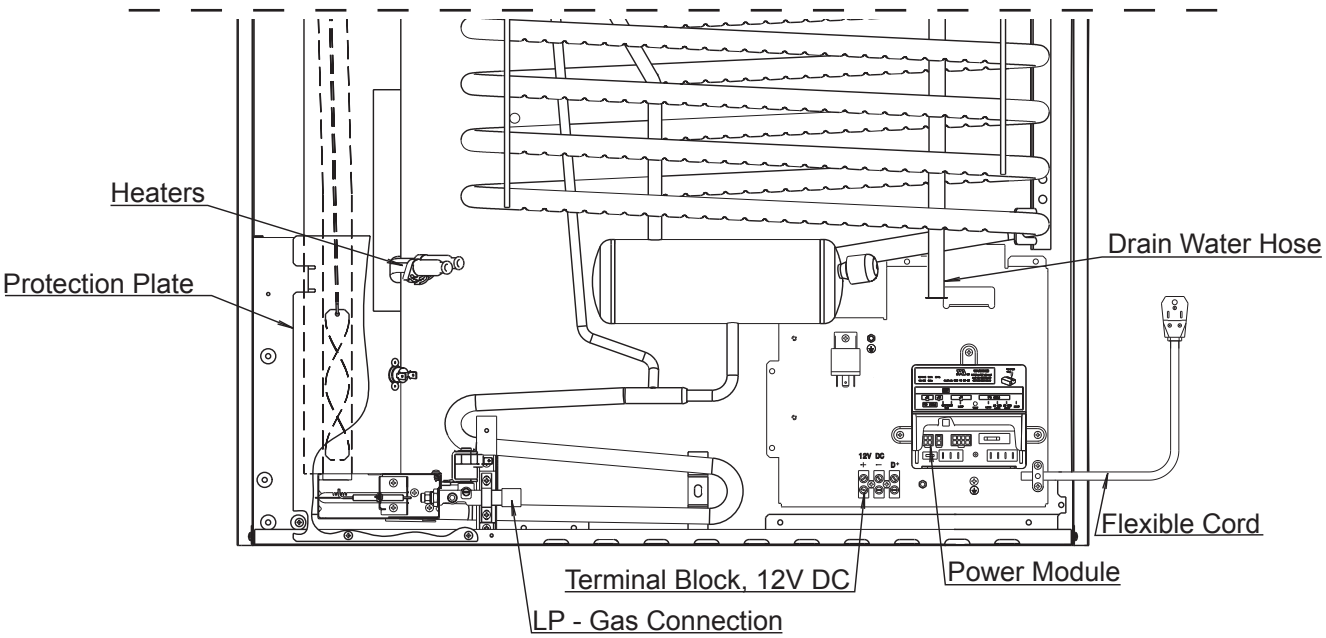

RM1350IM, RM1350MIM & RM1350WIM

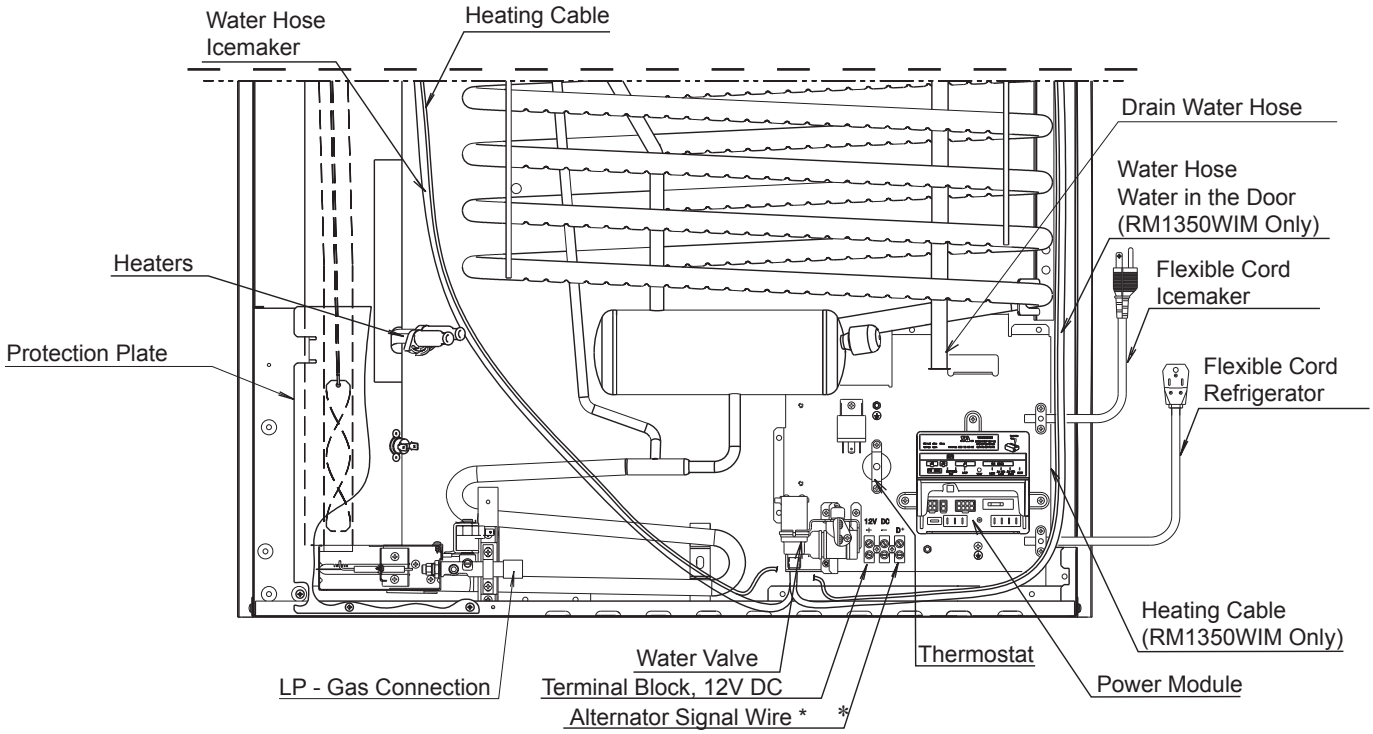

**Valid for refrigerators equipped with the automatic door locking system.*

APPENDIX E - REARVIEW EQUIPMENT

RM1350WID

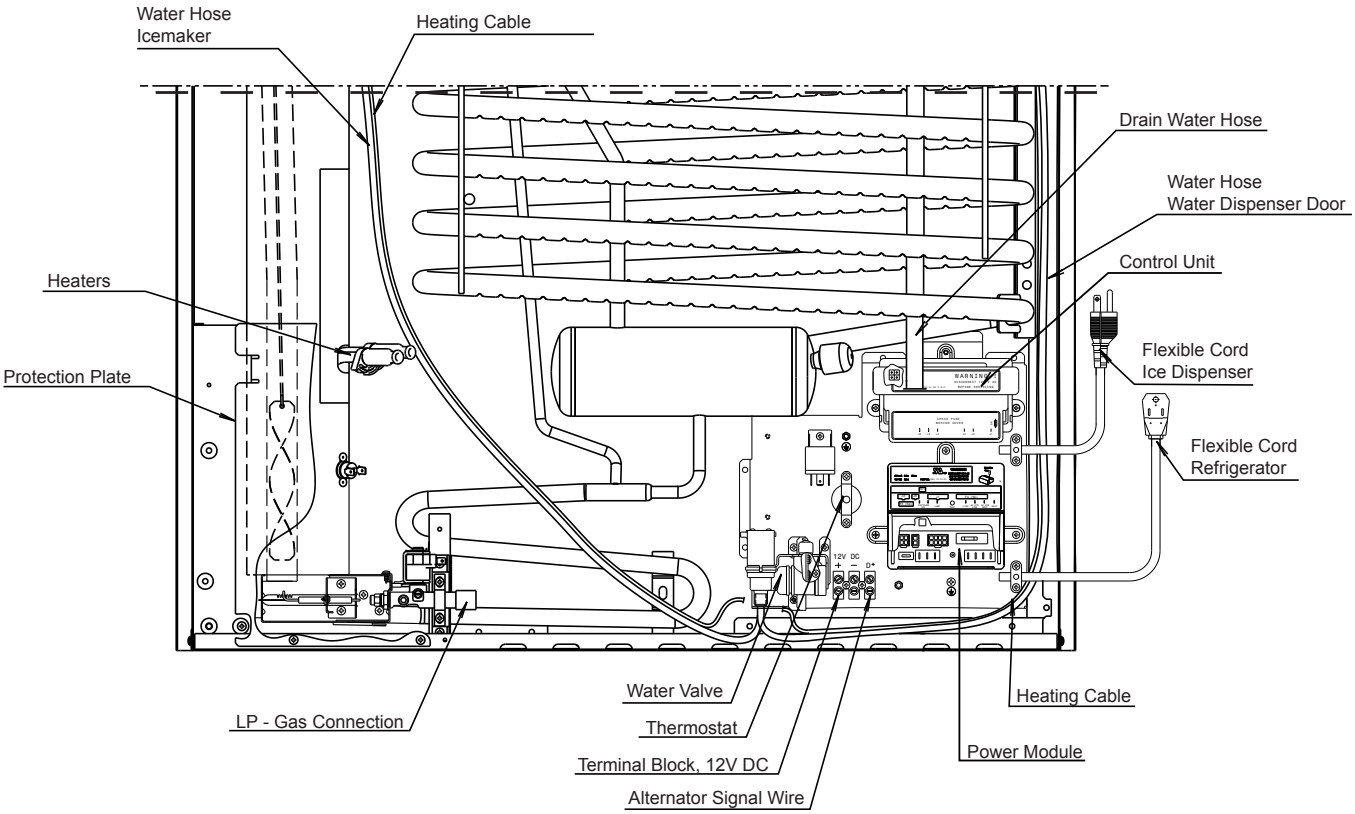

NDA1402 (WITH ICE MAKER)

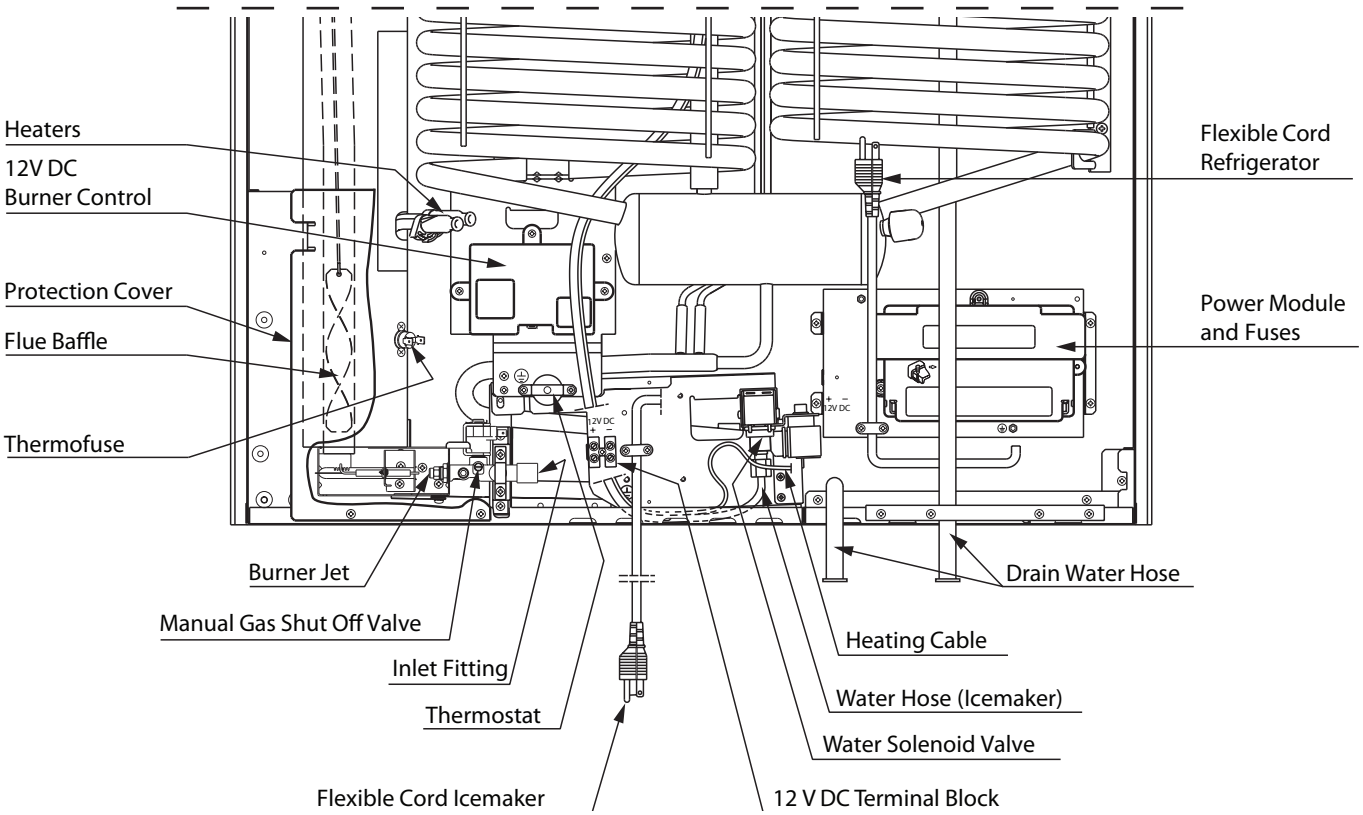

APPENDIX E - REARVIEW EQUIPMENT

NDA1402 (WITH ICE DISPENSER)

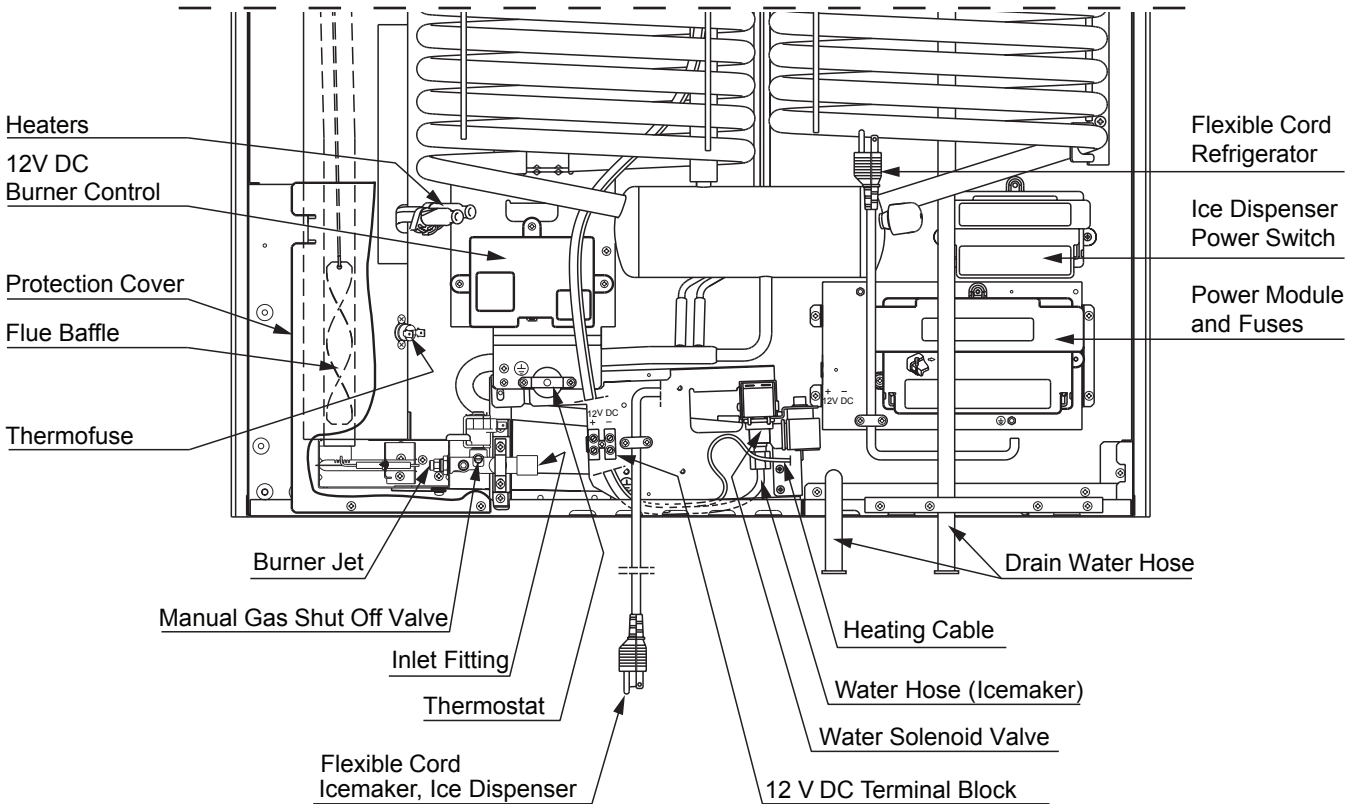

NDA1402 (WITH ICE AND WATER DISPENSERS)

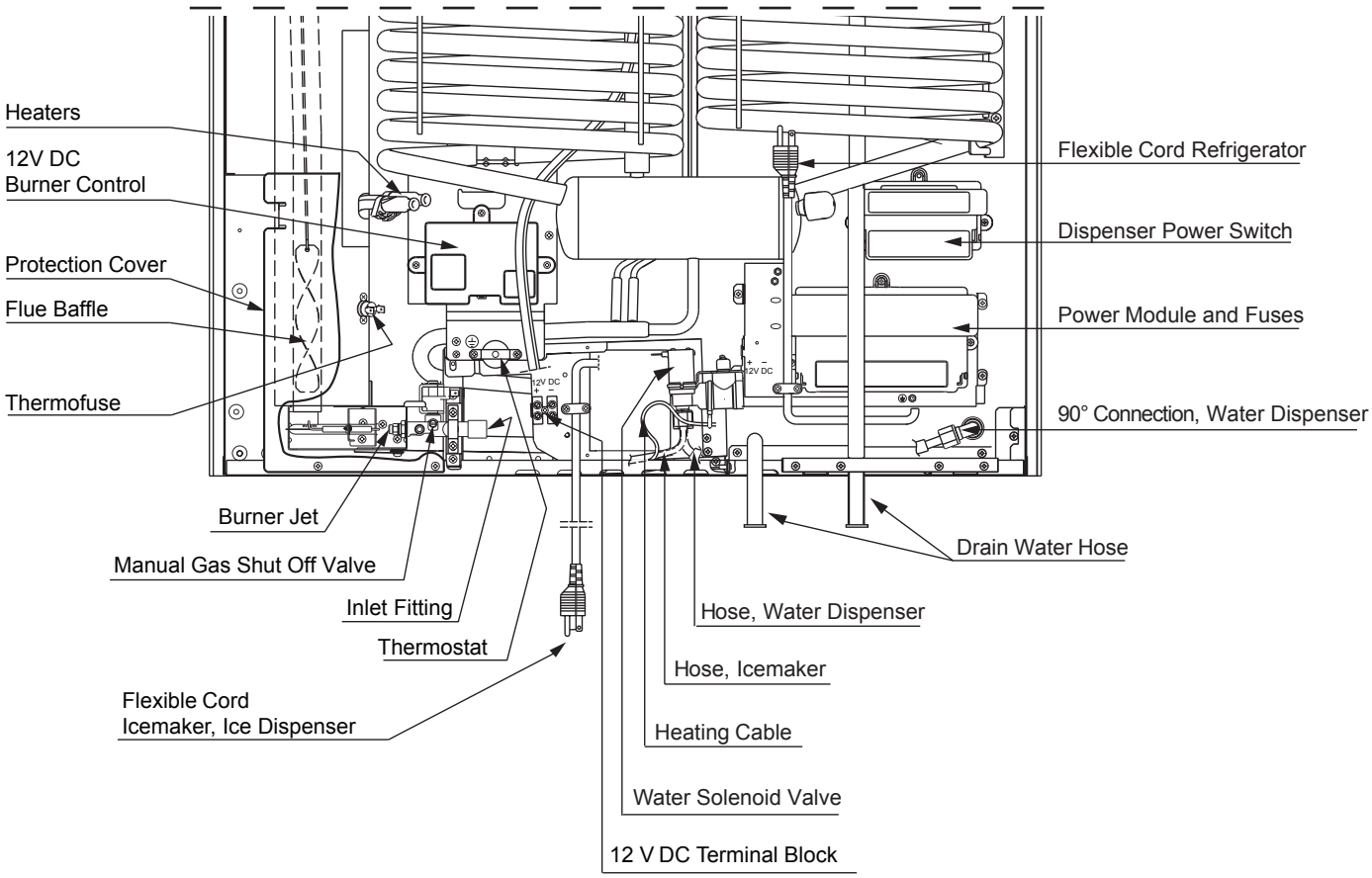

APPENDIX E - REARVIEW EQUIPMENT

NDM1062 (WITH ICE MAKER)

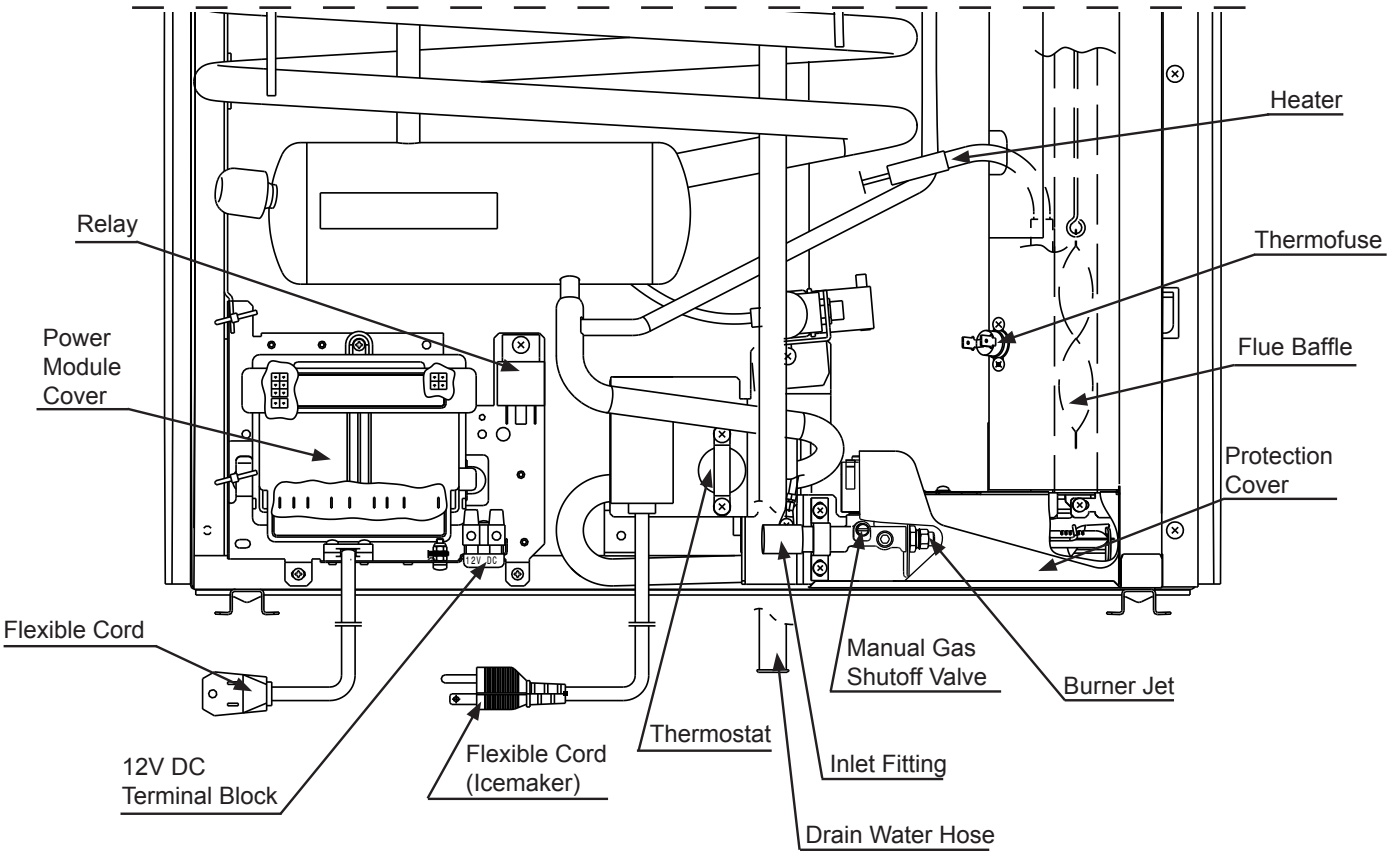

Shown without Secondary Burner Housing for illustrative purposes only.

APPENDIX F - WIRING DIAGRAMS

RM2351, RM2451 & RM2551

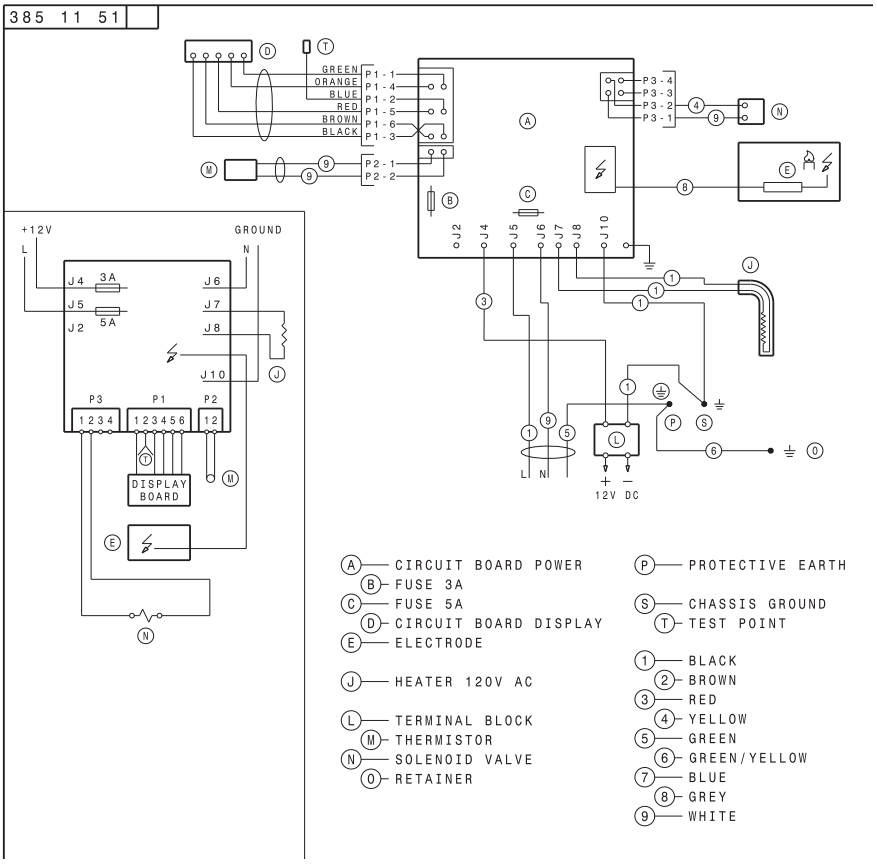

RM2354, RM2454 & RM2554

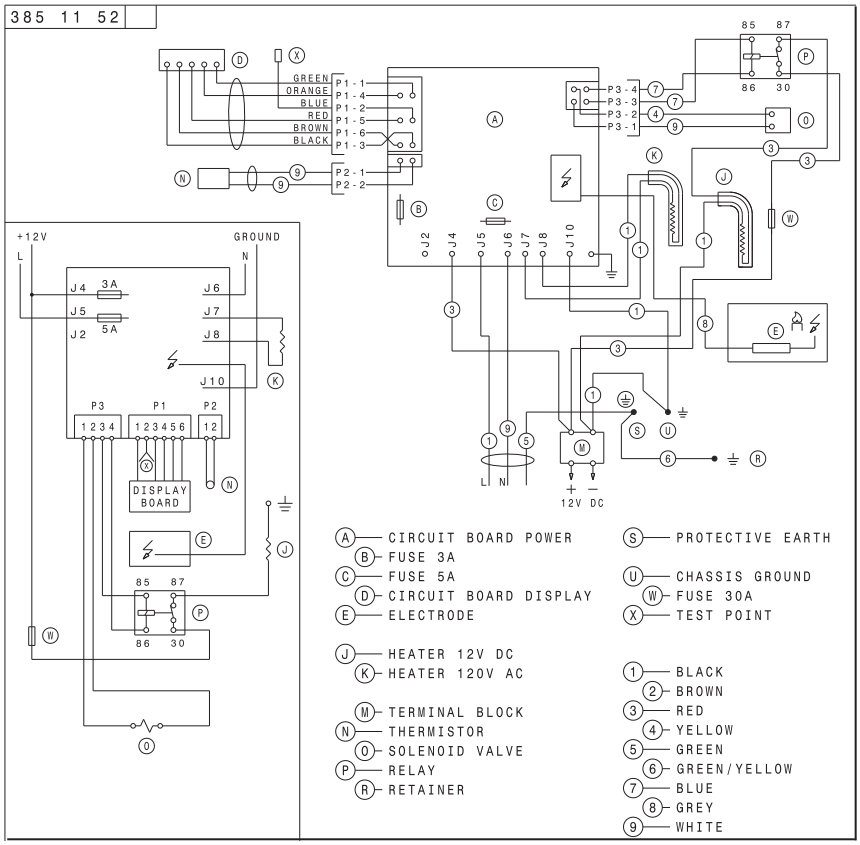

APPENDIX F - WIRING DIAGRAMS

RM2410

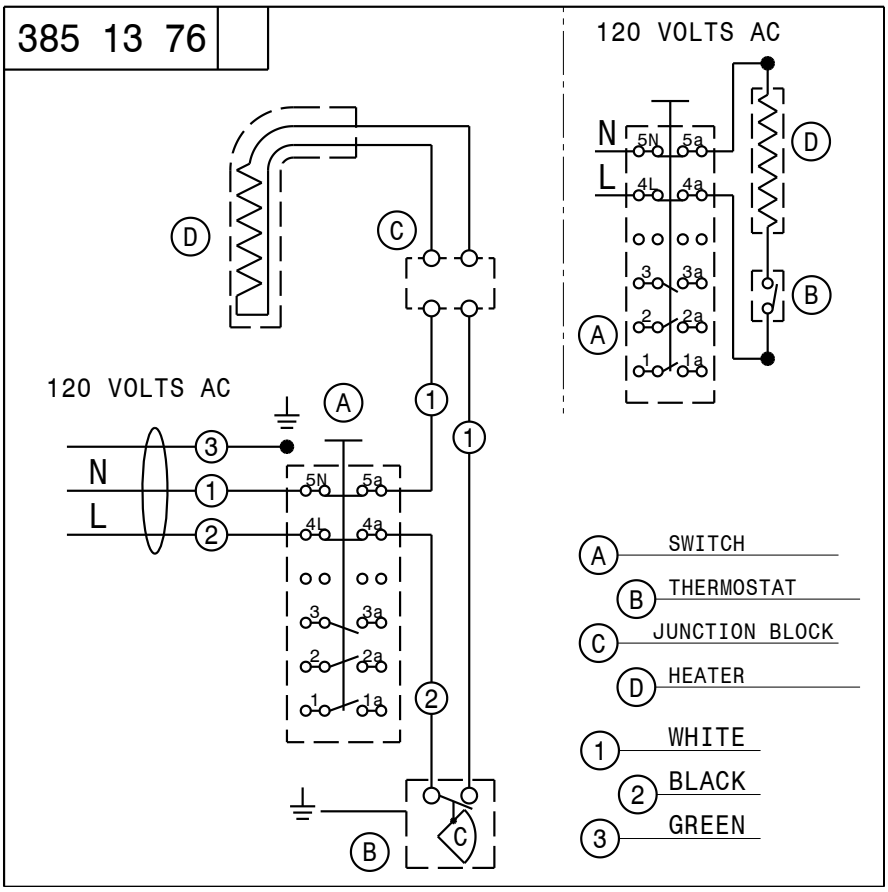

RM2510

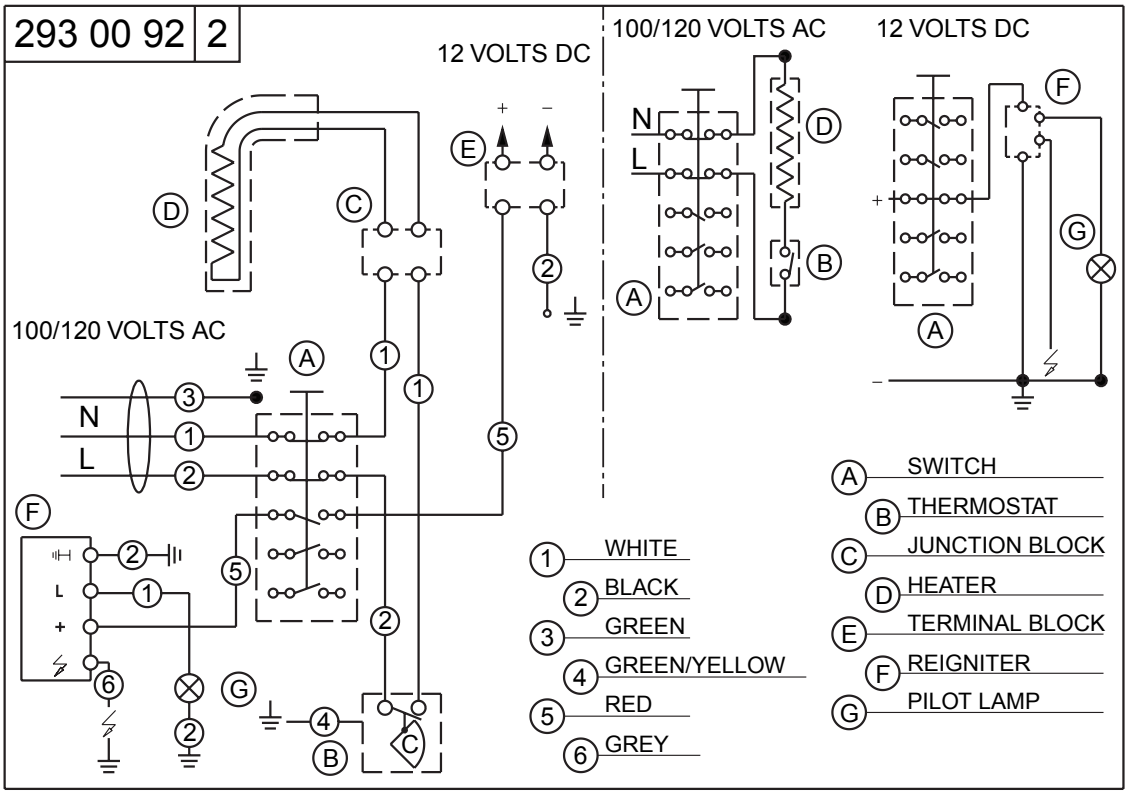

APPENDIX F - WIRING DIAGRAMS

RM2620 & RM2820

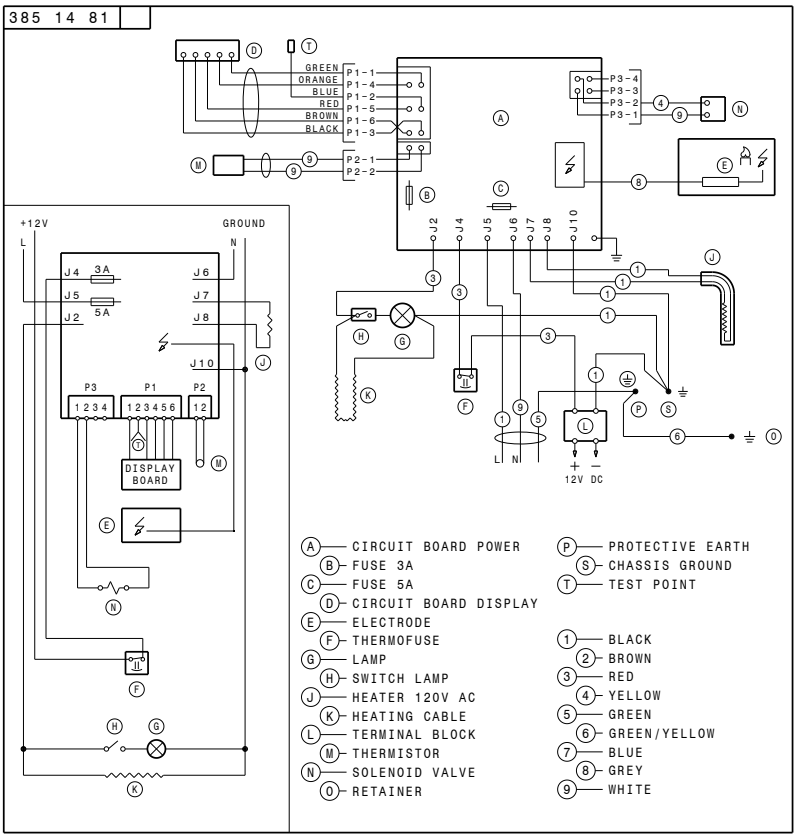

DM2652, DM2662, DM2852 & DM2862 (NO FAN) WITH & WITHOUT ICE MAKER

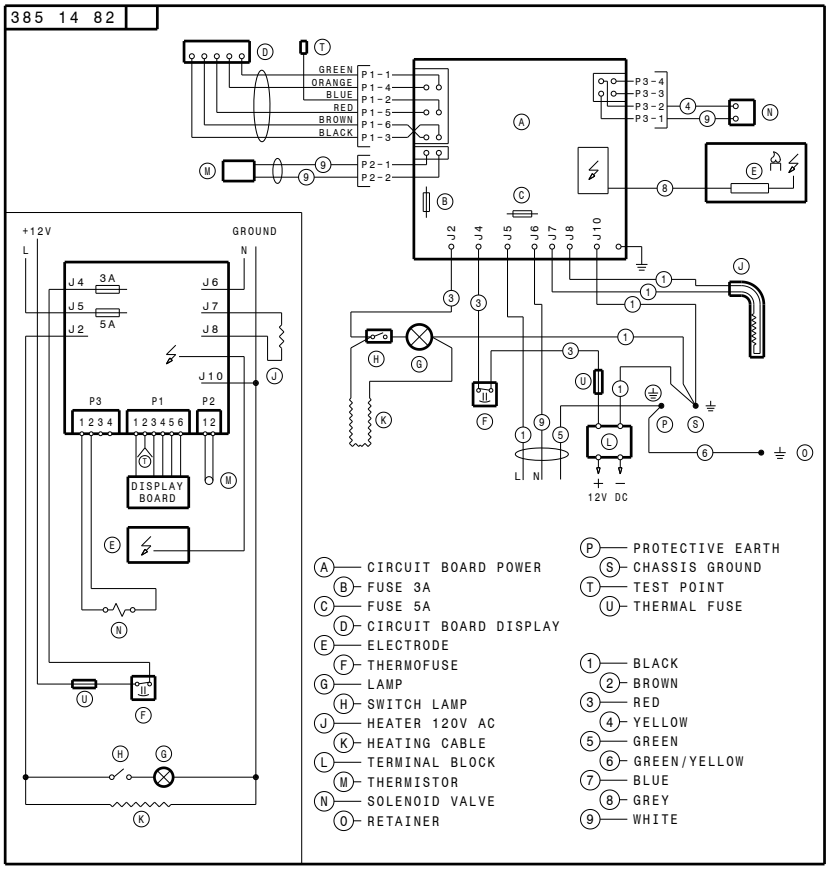

APPENDIX F - WIRING DIAGRAMS

DM2652, DM2662, DM2852 & DM2862 (ONE FAN) WITH AND WITHOUT ICE MAKER

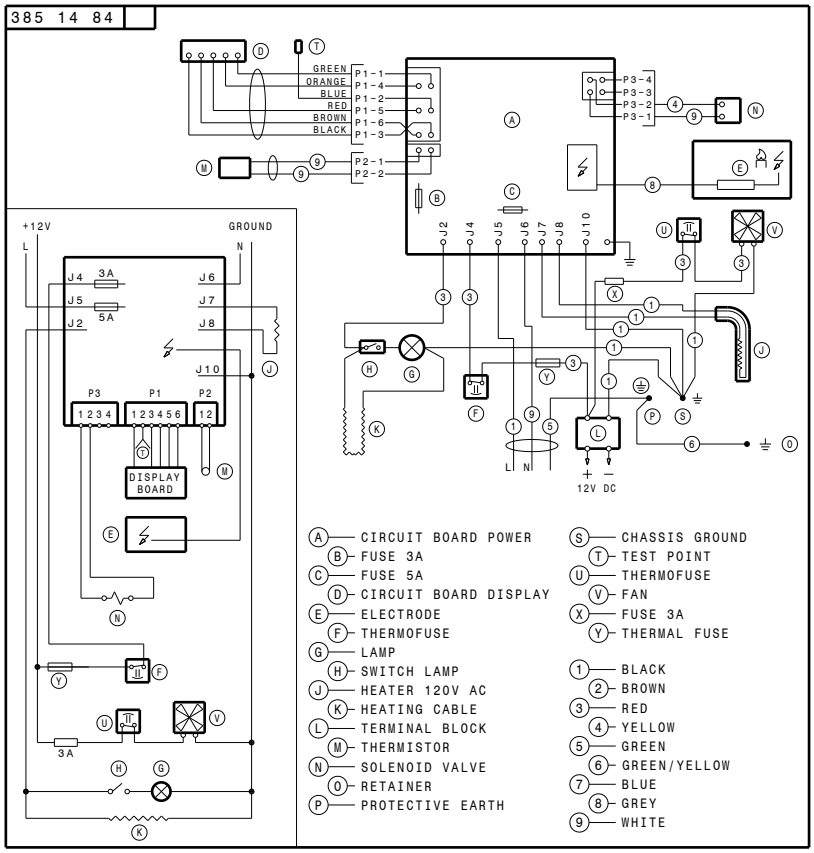

DM2852 & DM2862 (ONE OR TWO FANS) WITH AND WITHOUT ICE MAKER

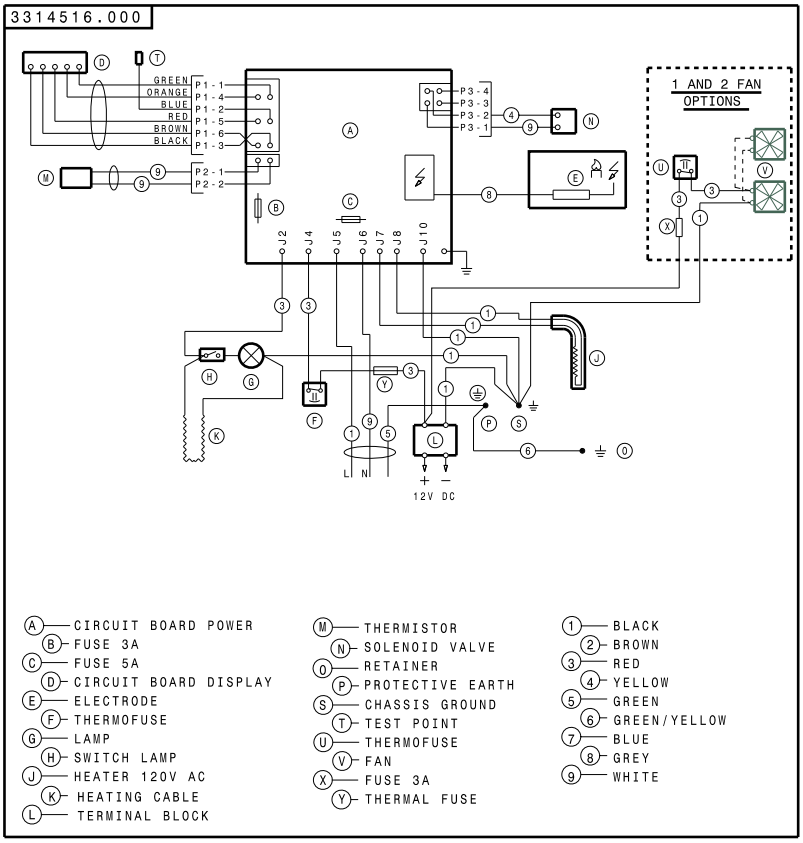

APPENDIX F - WIRING DIAGRAMS

DM2663 (NO FAN) WITHOUT ICE MAKER

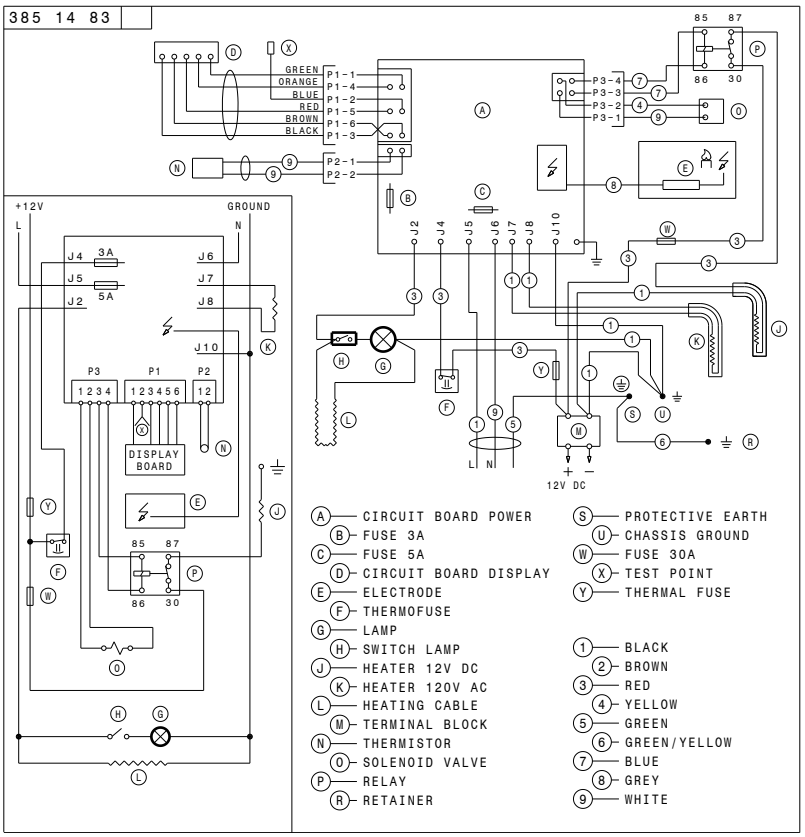

RM3762 & RM3962 (NO FAN) WITHOUT ICE MAKER

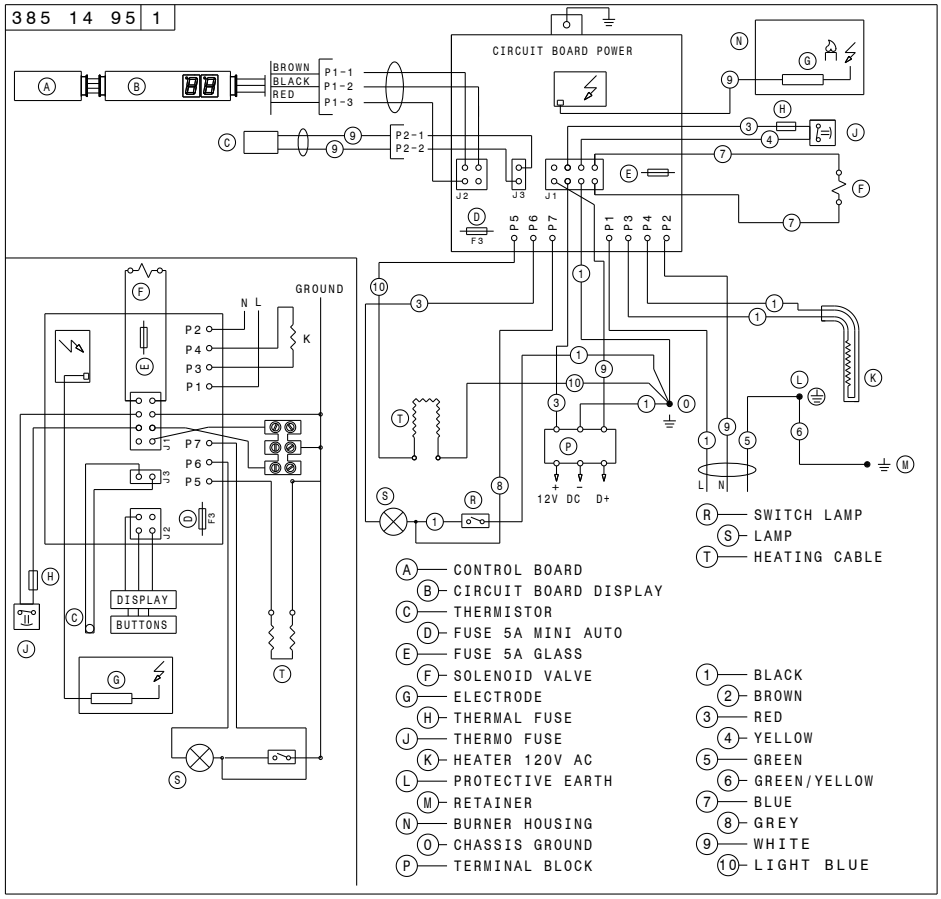

APPENDIX F - WIRING DIAGRAMS

RM3762 & RM3962 (ONE OR TWO FANS) WITH AND WITHOUT ICE MAKER

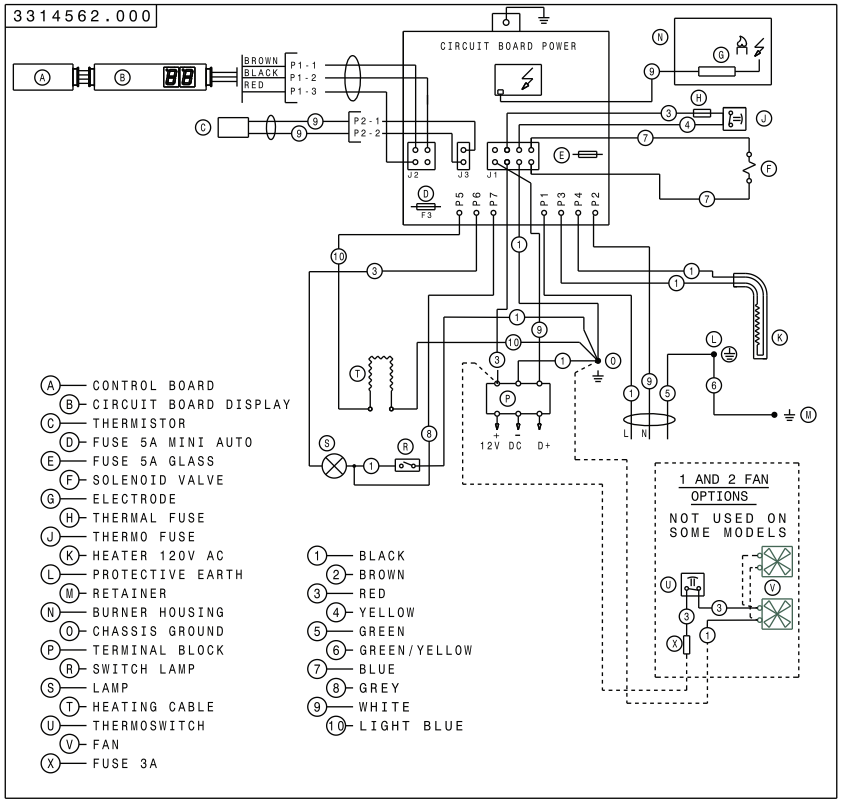

NDM1062 (STAINLESS STEEL DOORS)

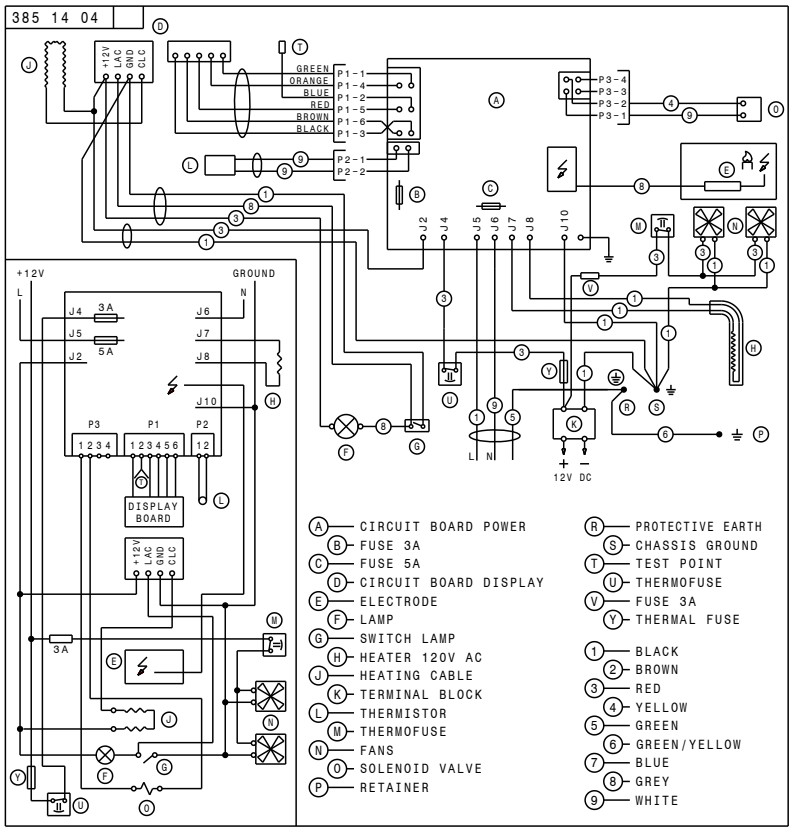

APPENDIX F - WIRING DIAGRAMS

NDM1062 (STAINLESS STEEL DOORS & ICE MAKER)

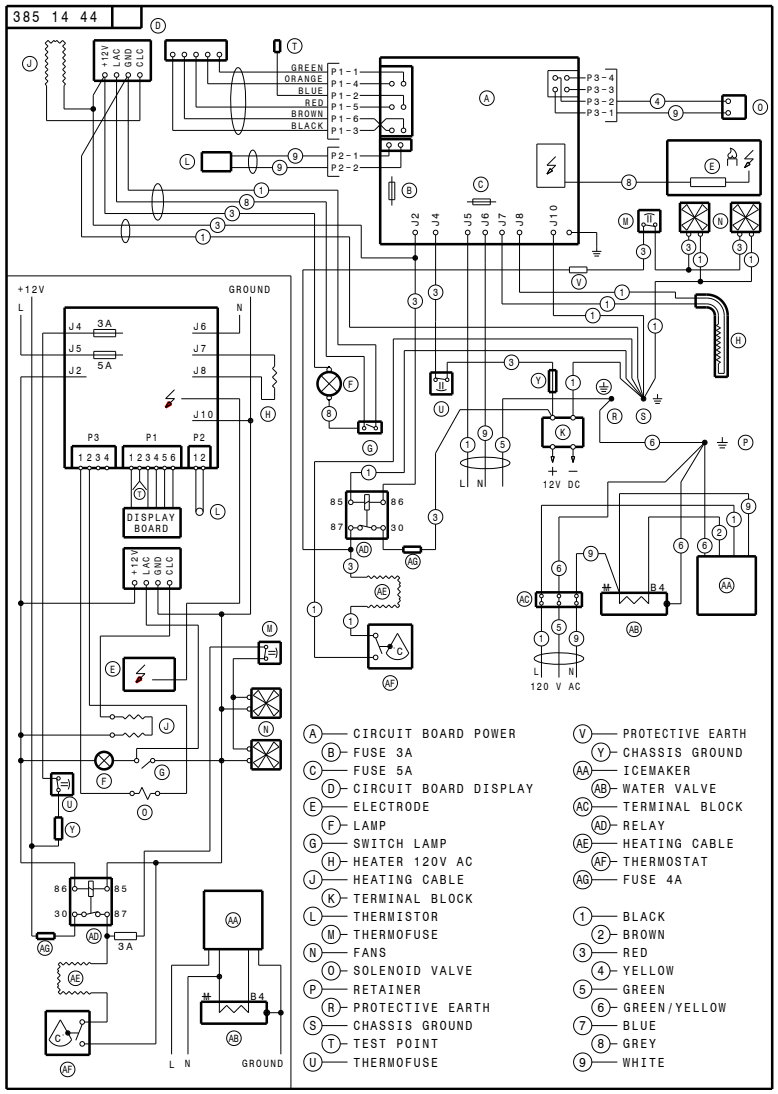

APPENDIX F - WIRING DIAGRAMS

NDM1062 (DOOR INSERT PANELS)

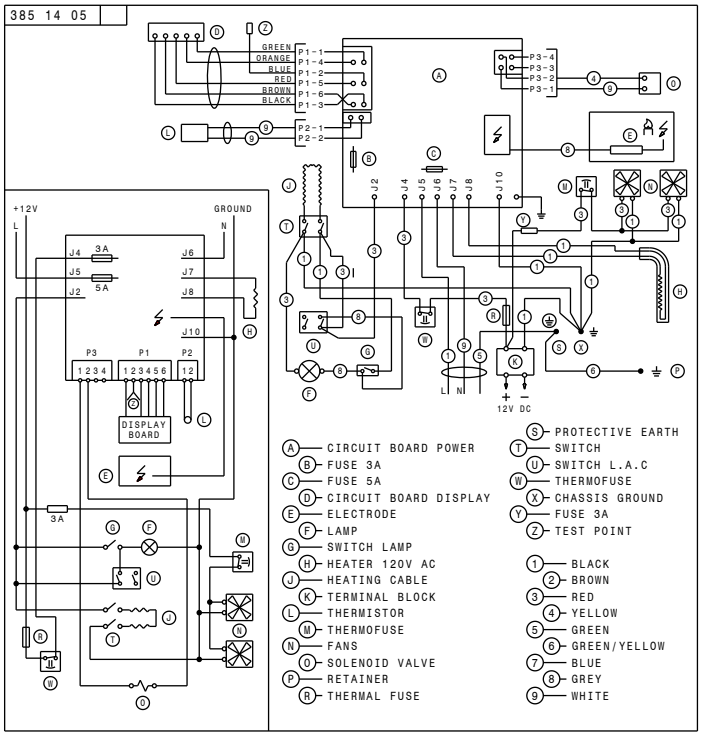

NDM1062 (DOOR INSERT PANELS & ICE MAKER)

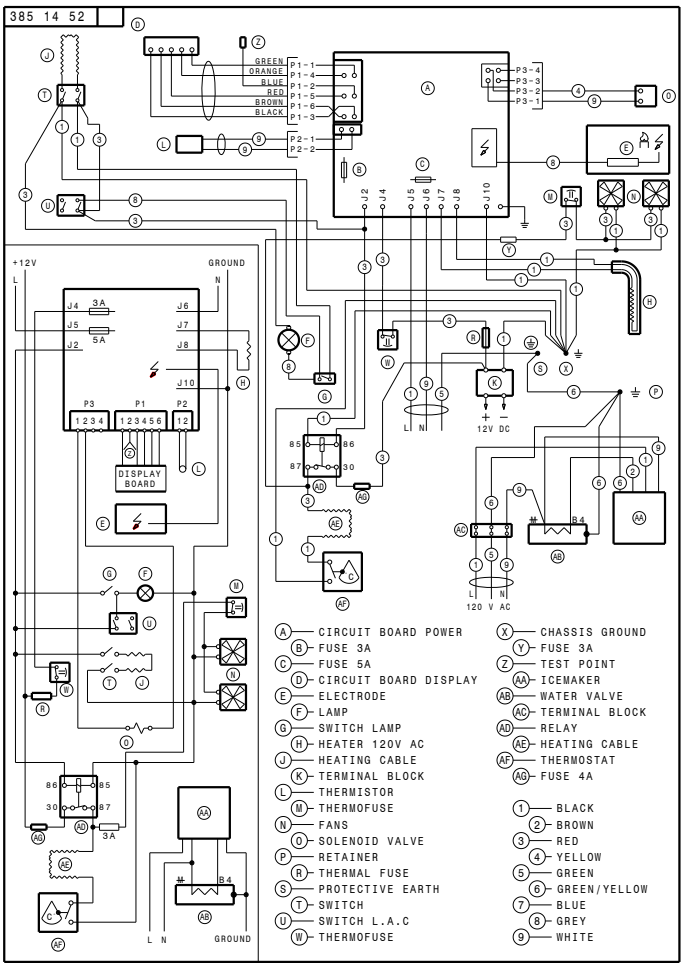

APPENDIX F - WIRING DIAGRAMS

RM1350M (MANUAL DOOR LOCK & DOOR INSERT PANELS OR STEEL DOORS)

RM1350MIM (MANUAL DOOR LOCK, ICE MAKER & DOOR INSERT PANELS)

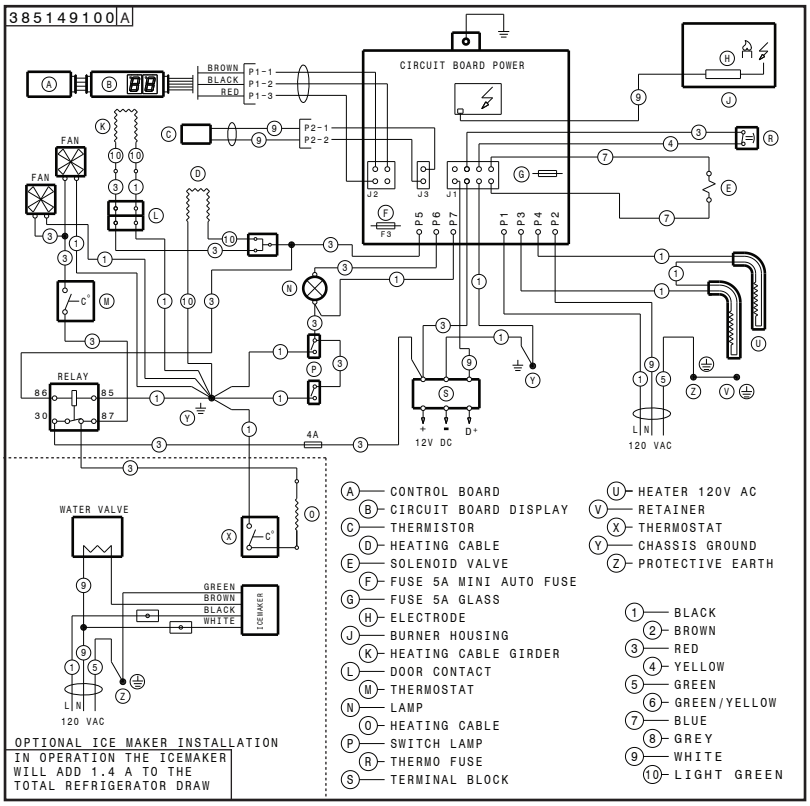

RM1350SLM (MANUAL DOOR LOCK & DOOR INSERT PANELS OR STEEL DOORS)

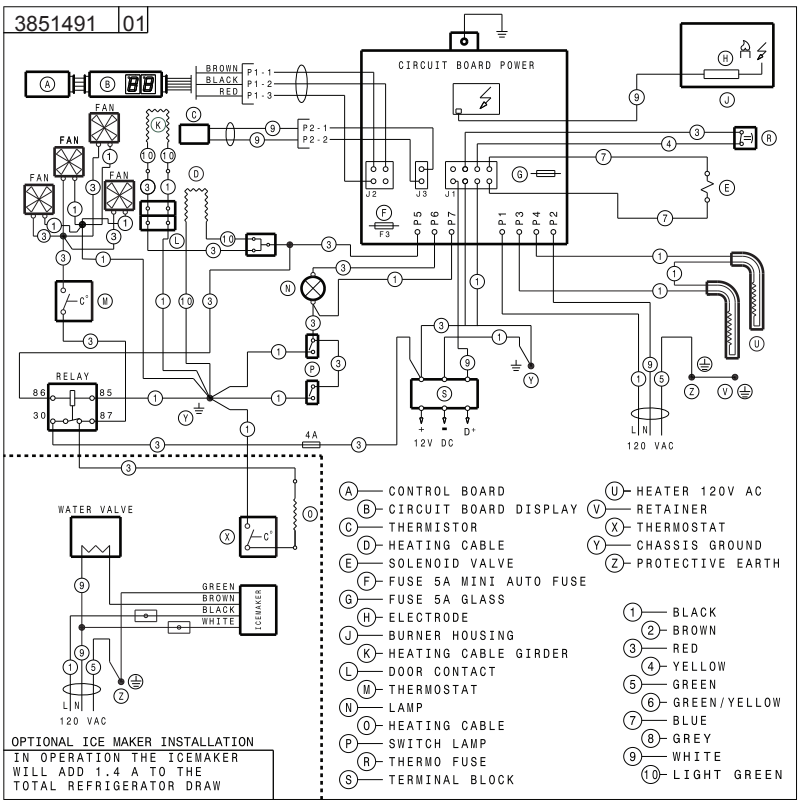

APPENDIX F - WIRING DIAGRAMS

RM1350IM (AUTOMATIC DOOR LOCK, ICE MAKER & STEEL DOORS)

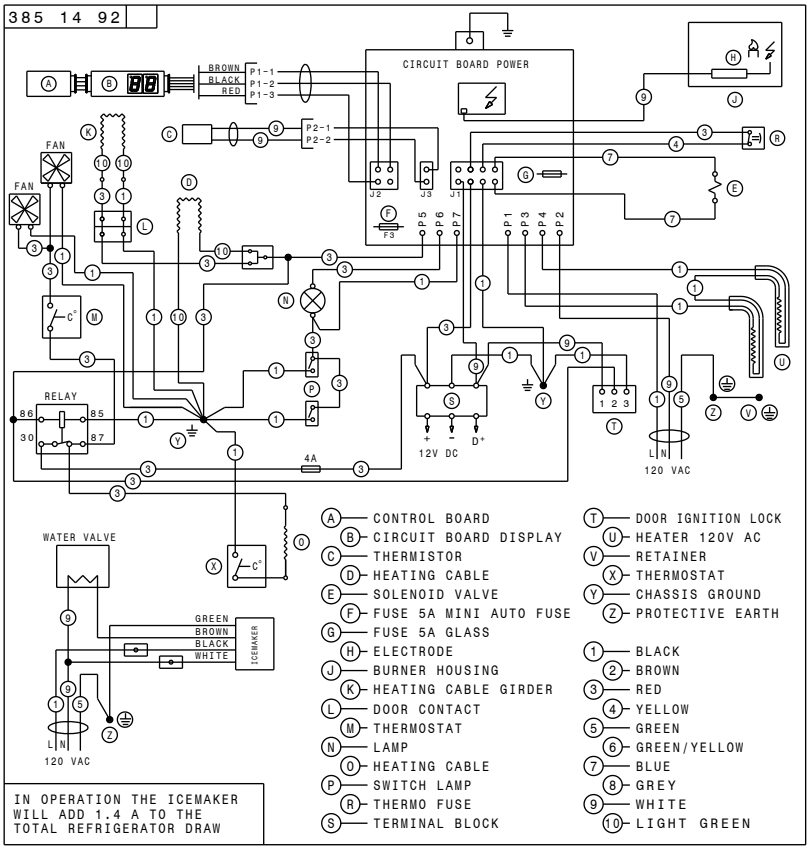

RM1350WIM (AUTOMATIC DOOR LOCK, ICE MAKER, WATER DISPENSER & DOOR INSERT PANELS OR STEEL DOORS)

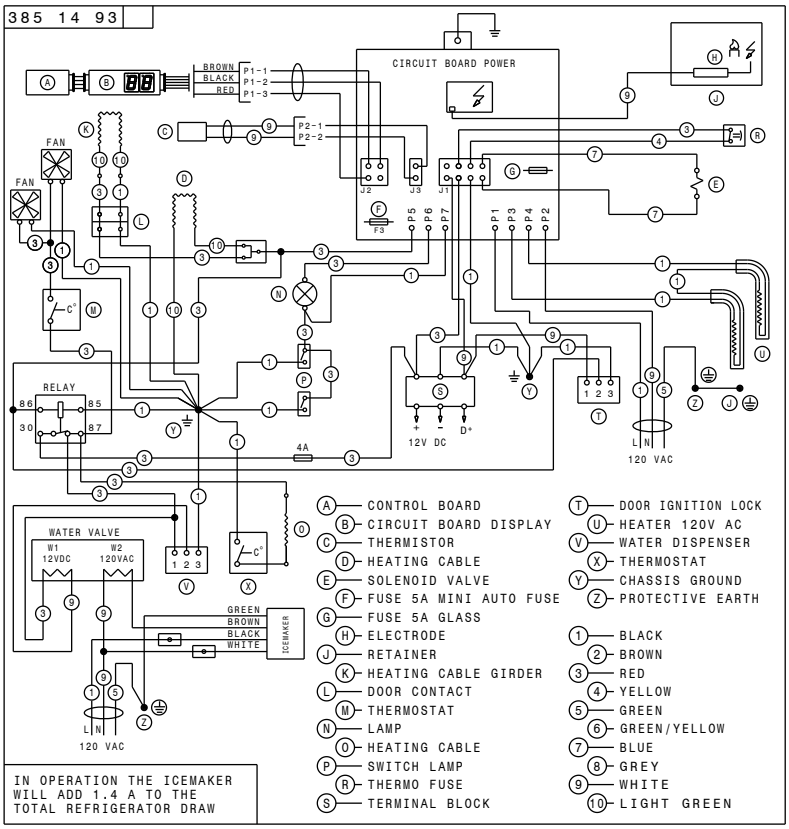

APPENDIX F - WIRING DIAGRAMS

RM1350WID (AUTOMATIC DOOR LOCK, ICE MAKER, WATER AND ICE DISPENSERS & DOOR INSERT PANELS OR STEEL DOORS)

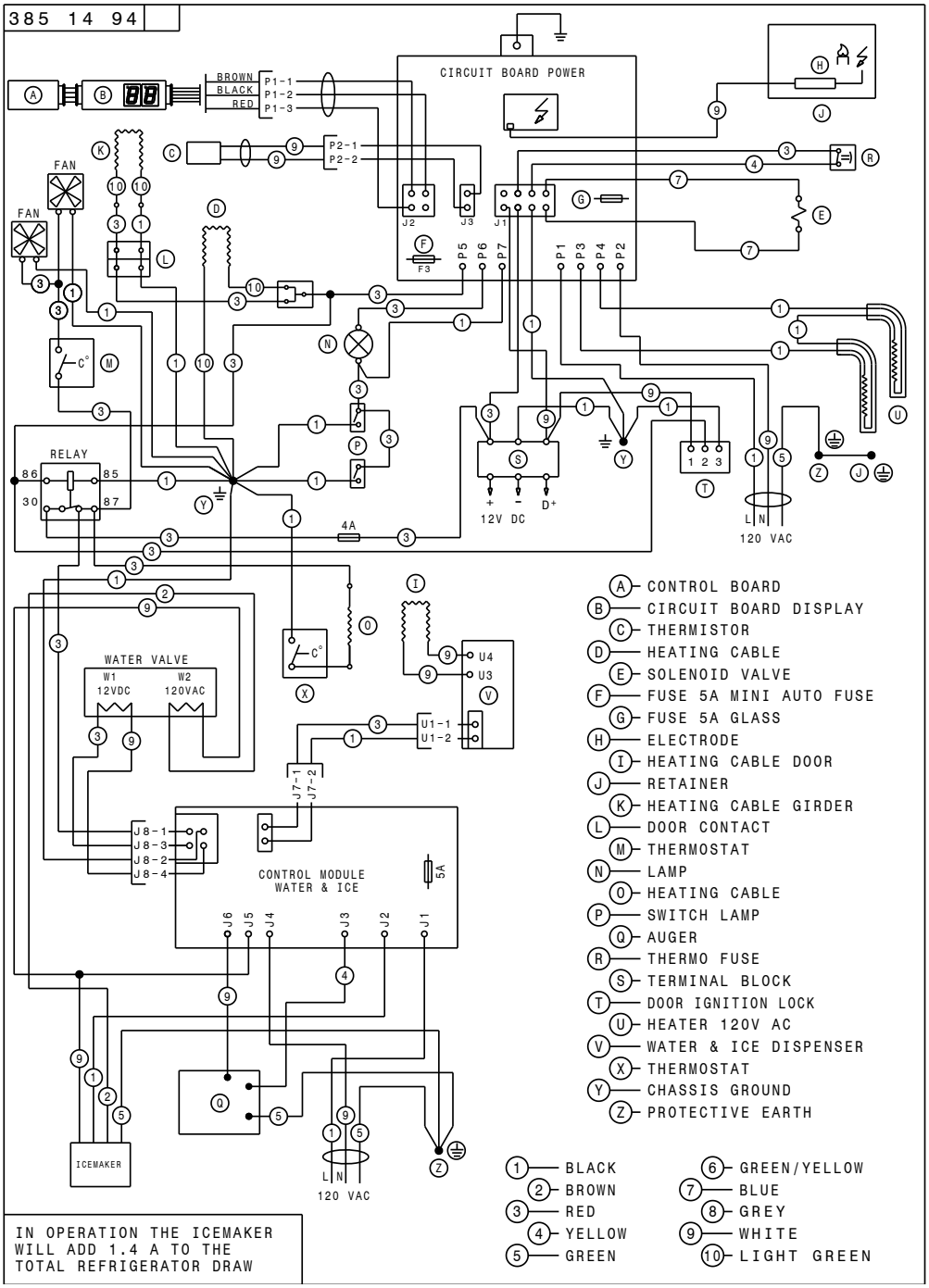

APPENDIX F - WIRING DIAGRAMS

NDA1402*

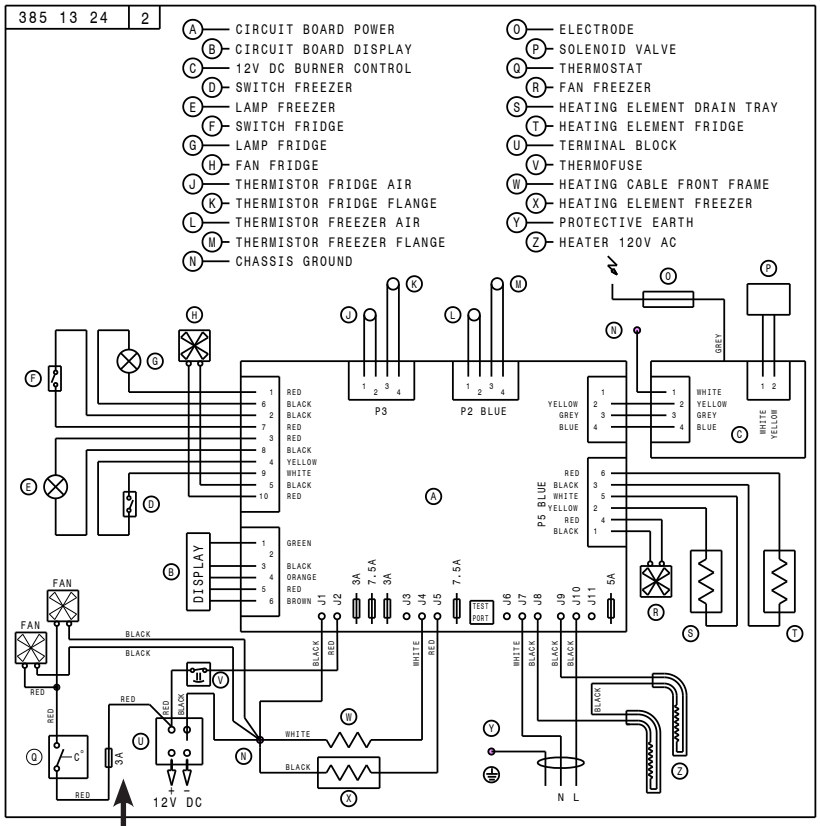

3A inline fuse for the power vent fans

FUSES

Fuses (from left to right) protect the following components.

Fuse	Type of component
3A	A, B, C, E, G, H, P, R
7.5A	S, T
3A	W*
7.5A	X
5A	Z

* Optional ice maker heat-kit

NDA1402 (WITH ICE MAKER)

3851324 (2) + 3850699 (2)

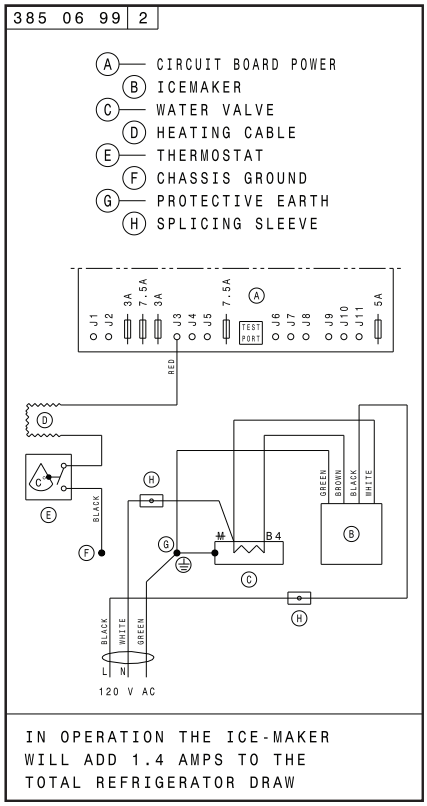

*NDA1402 has two wiring diagrams:

- Models with ice maker
  3851324 (2) + 3850699 (2)
- Models with ice dispenser
  3851324 (2) + 3850897 (3)
- Models with ice and water dispensers
  3851324 (2) + 3851112

APPENDIX F - WIRING DIAGRAMS

NDA1402 (WITH ICE DISPENSER)

3851324 (2) + 3850897(3)

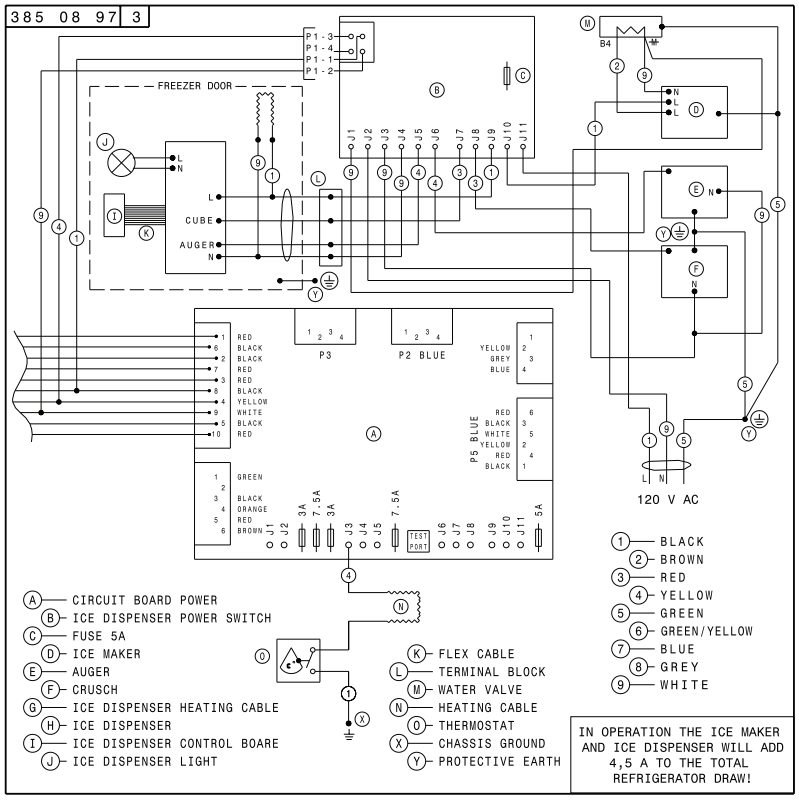

NDA1402 (WITH ICE AND WATER DISPENSERS)

3851324 (2) + 3851112

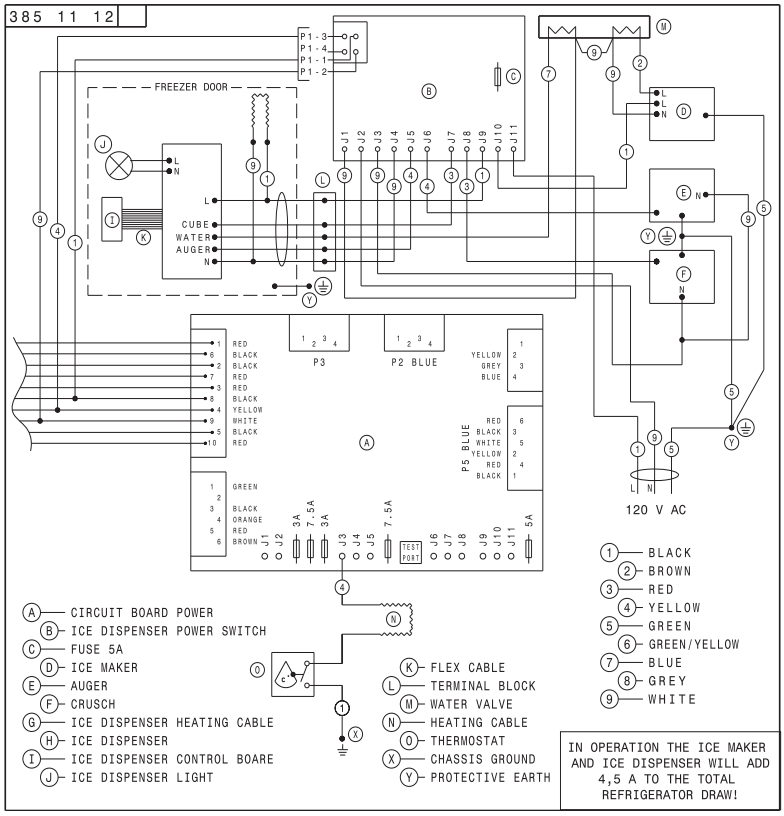

NOTES