DOMETIC

RECORD THIS UNIT INFORMATION FOR FUTURE REFERENCE:	
Type Number	_____
Product Number	_____
Serial Number	_____
ADB Number	_____
ADB Serial Number	_____
Date Purchased	_____

Roof Top Unit				
Description	Model	Type	Use With Air Distribution Box	
			Model	Control
Air Conditioner W/Electric Heat	B3200	3241	3310895.028	Integral Mechanical
Heat Pump	B3200	3242	3311669.018	Integral Mechanical

USA
SERVICE OFFICE
Dometic Corporation
1120 North Main Street
Elkhart, IN 46514

CANADA
Dometic Corporation
46 Zatonski, Unit 3
Brantford, Ontario
CANADA N3T 5L8

SERVICE CENTER & DEALER LOCATIONS
Please Visit:
www.eDometic.com

Note: Air Distribution Box installation requires a #2 Phillips screwdriver with a 7 mm maximum diameter x 35 mm minimum length.

⚠ WARNING

This manual must be read and understood before installation, adjustment, service, or maintenance is performed. This unit must be installed by a qualified service technician. Modification of this product can be extremely hazardous and could result in personal injury or property damage.

INSTALLATION & OPERATING INSTRUCTIONS

Type
3241.301
3242.301

REVISION A
Form No. 3312937.018 11/16

©2016 Dometic Corporation
LaGrange, IN 46761

Important: These Instructions must stay with unit. Owner read carefully.

SAFETY INSTRUCTIONS

This manual has safety information and instructions to help users eliminate or reduce the risk of accidents and injuries.

RECOGNIZE SAFETY INFORMATION

This is the safety-alert symbol. When you see this symbol in this manual, be alert to the potential for personal injury.

Follow recommended precautions and safe operating instructions.

UNDERSTAND SIGNAL WORDS

A signal word , **WARNING** OR **CAUTION** is used with the safety-alert symbol. They give the level of risk for potential injury.

⚠ WARNING indicates a potentially hazardous situation which, if not avoided, could result in death or serious injury.

⚠ CAUTION indicates a potentially hazardous situation which, if not avoided, may result in minor or moderate injury.

CAUTION used without the safety alert symbol indicates, a potentially hazardous situation which, if not avoided, may result in property damage.

Read and follow all safety information and instructions.

GENERAL INFORMATION

A. Product features or specifications as described or illustrated are subject to change without notice.

B. This Air Conditioner/Heat Pump (hereinafter referred to as the "unit" Is Designed For:

1. Installation on a Caravan during or after the time the Caravan is manufactured.
2. Mounting on the roof of a Caravan.
3. Roof construction with rafters/joists support frames on minimum of 406 mm centers.
4. Minimum of 25 mm and maximum of 140 mm distance between roof to ceiling of Caravan.

C. Basic Requirements

1. Installation opening. Cut through the roof and ceiling.
2. 220-240 VAC, 50 Hz. 10 Amp.
3. Power when the unit starts must be above 198 VAC and the frequency must be 50 Hz at all times.

D. The ability of the air conditioner to maintain the desired inside temperature depends on the heat gain of the Caravan.
Some preventative measures taken by the occupants of the Caravan can reduce the heat gain and improve the ability of the air conditioner to cool the Caravan. During extremely high outdoor temperatures, the heat gain of the Caravan may be reduced by:

1. Parking the Caravan in a shaded area
2. Using window shades (blinds and/or curtains)
3. Keeping windows and doors shut or minimizing usage
4. Avoiding the use of heat producing appliances

Operation on High Fan/Cooling mode will give optimum or maximum efficiency in high humidity or high outside temperatures.

Starting the air conditioner early in the morning and giving it a "head start" on the expected high outdoor ambient will greatly improve its ability to maintain the desired indoor temperature.

For a more permanent solution to high heat gain, accessories like an outdoor patio and window awning will reduce heat gain by removing the direct sun. They also add a nice area to enjoy company during the cool of the evening.

E. Condensation

Note: The manufacturer of this unit will not be responsible for damage caused by condensed moisture on ceilings or other surfaces. Air contains moisture and this moisture tends to condense on cold surfaces. When air enters the Caravan, condensed moisture may appear on the ceiling, windows, metal parts, etc. The air conditioner removes this moisture from the air during normal operation. Keeping doors and windows closed when this air conditioner is in operation will minimize condensed moisture on cold surfaces.

Specifications

Type	3241	3242	
A/C OR H/P	A/C	H/P	
Nominal Cooling Capacity (KW)	3.0	3.0	
Electric Heat Capacity (KW)	1.6	N/A	
Electrical Rating	220 - 240 VAC 50 Hz., 1 Ph		
Full Load Amps (Compressor / Motor)	5.46 / .92	5.46 / .92	
Locked Rotor Amps (Comp / Motor)	27 / 2.3	27 / 2.3	
Power (KW) Compressor + Motor	1.34	1.33	
Power (KW) Heater	1.5	N/A	
Refrigerant R410A Grams / Oz.	525 / 18.5	695 / 24.5	
Minimum Wire Size	Up to 8 meters use 1.5 mm^2, Copper. Consult Regulatory Codes.		
Circuit Protection	10 Amp Time Delay Fuse, or Circuit Breaker		
* Generator Size	1 Unit - 3.5 KW 2 Unit - 5.0 KW		

* The manufacturer gives **GENERAL** guidelines for generator requirements. These guidelines come from experiences people have had in actual applications. When sizing the generator, the total power usage of your Caravan must be considered. Keep in mind generators lose power at high altitudes and from lack of maintenance.

INSTALLATION INSTRUCTIONS

A. Precautions

⚠ WARNING

Improper installation may damage equipment, could endanger life, cause serious injury and/ or property damage.

1. Read Installation and Operating Instructions carefully before attempting to start this unit installation.
2. The manufacturer will not be liable for any damages or injury incurred due to failure in following these instructions.
3. The equipment shall be installed in accordance with national wiring regulation per **IEC 335-2-40, CI, 7.12.1**. Installation must comply with all applicable codes and/or regulations.
4. **DO NOT** add any devices or accessories to this unit except those specifically authorized in writing by Dometic Corporation.
5. This equipment must be serviced by qualified personnel and some localities require these people to be licensed.

B. Choosing Proper Location For The Unit

This unit is specifically designed for installation on the roof of a Caravan. When determining your cooling requirements, the following should be considered:

- Size of Caravan;
- Window area (increases heat gain);
- Amount of insulation in walls and roof;
- Geographical location where the Caravan will be used;
- Personal comfort level required.
  1. Normal location-The unit is designed to fit over an existing roof vent opening.
  2. Other locations - When no roof vent is available or another location is desired, the following is recommended:
     a. For one unit installation: The unit should be mounted slightly forward of center (front to back) and centered from side to side.
     b. For two unit installations: Install one unit 1/3 and one unit 2/3's from front of Caravan and centered from side to side.

FIG. 1

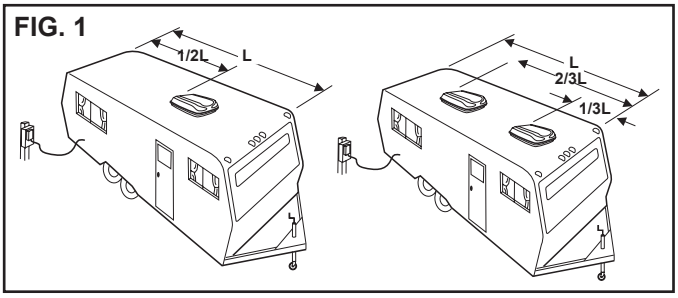

It is preferred that the unit be installed on a relatively **flat and level** roof section measured with the Caravan parked on a level surface, but up to a 8° tilt is acceptable.

3. After location has been selected:
   a. Check for obstructions in the area where unit will be installed. See FIG. 2.

FIG. 2

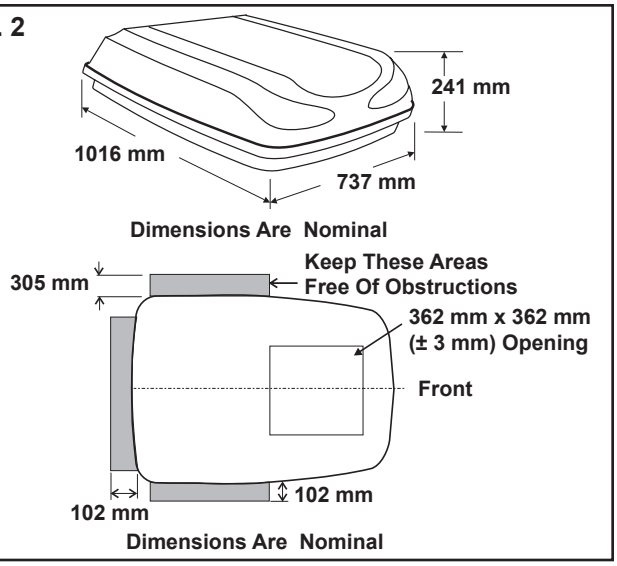

b. The roof must be designed to support 65 Kg. when the Caravan is in motion. Normally a 100 Kg. static load design will meet this requirement.

CAUTION

It is the responsibility of the installer of this system to ensure structural integrity of the Caravan roof. Never create a low spot on the roof where water will collect. Water standing around the unit may leak into the interior causing damage to the product and the Caravan.

c. Check inside the Caravan for air distribution box obstructions (i.e. door openings, room dividers, curtains, ceiling fixtures, etc.). See FIG. 3.

FIG. 3

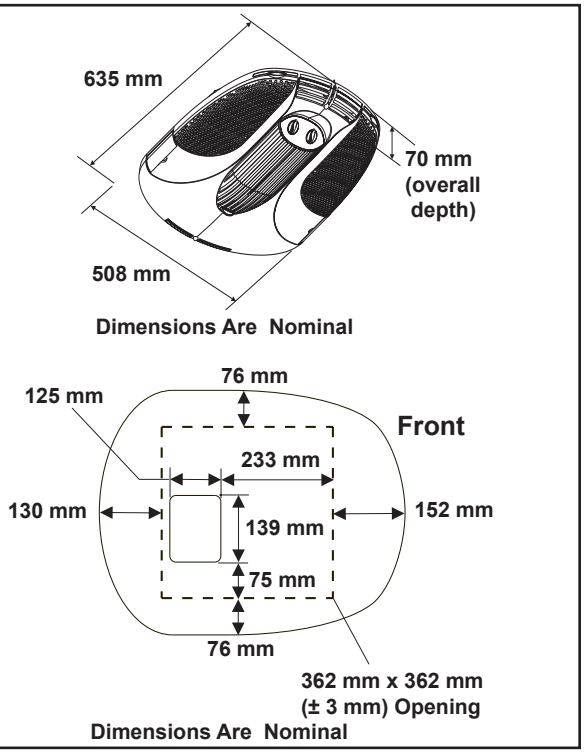

C. Roof Preparation

1. Opening requirements - Before preparing the ceiling opening, read all of the following instructions before beginning the installation.
   If an existing roof vent opening will not be used a 362 mm x 362 mm (± 3 mm) opening must be cut through the roof and ceiling of the Caravan. This opening must be located between the roof reinforcing members.

⚠ WARNING

There may be electrical wiring between the roof and the ceiling. Disconnect 220 - 240 VAC power cord and the positive (+) 12 VDC terminal at the supply battery. Failure to follow this instruction may create a shock hazard causing death or severe personal injury.

   The 362 mm x 362 mm (± 3 mm) opening is part of the return air system of the unit and must be finished in accordance with all applicable national and local codes and/or regulations.
2. Roof vent removal
   a. Unscrew and remove the roof vent.
   b. Remove all caulking compound around opening.
   c. Seal all screw holes and seams where the roof gasket will be located. Use a good grade of all weather sealant. See FIG. 4

FIG. 4

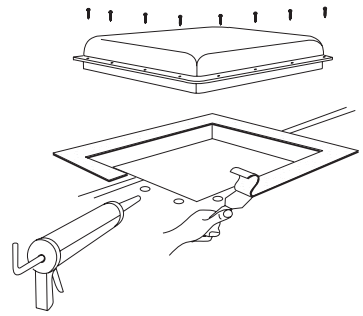

   d. If the opening exceeds 365 mm x 365 mm, it will be necessary to re-size the opening to 362 mm x 362 mm (± 3 mm).
   e. If the opening is less than 359 mm x 359 mm, it must be enlarged to 362 mm x 362 mm (± 3 mm).
3. New opening - (Installation other than vent opening)
   a. Mark a 362 mm x 362 mm (± 3 mm) square on the roof and carefully cut the opening.
   b. Using the roof opening as a guide, cut the matching hole in the ceiling.
   c. The opening created must be framed to provide adequate support and prevent air from being drawn from the roof cavity. Framing stock 19 mm or more in thickness must be used. Remember to provide an entrance hole for power supplies at the front of the opening. See FIG. 5.

FIG. 5

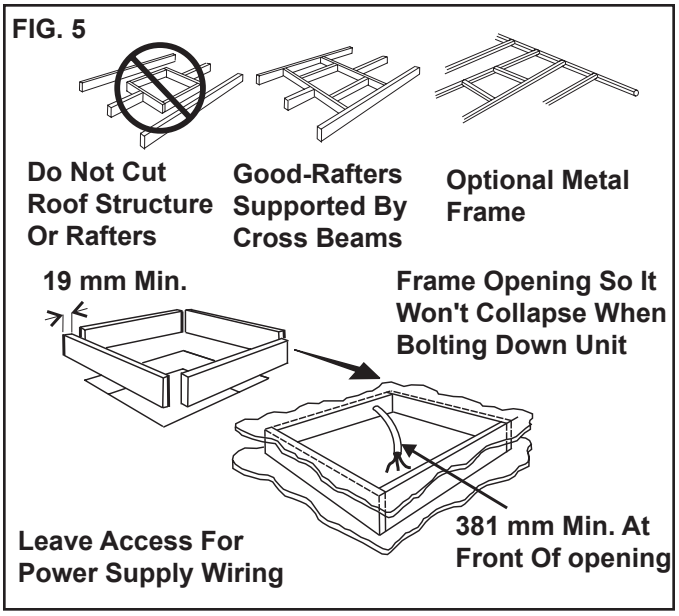

CAUTION

It is the responsibility of the installer of this system to ensure structural integrity of the Caravan roof. Never create a low spot on the roof where water will collect. Water standing around the unit may leak into the interior causing damage to the product and the Caravan.

D. Wiring Requirements

1. 220 - 240 VAC Supply Wire
   Route a copper, with ground, 220 - 240 VAC supply wire from the time delay fuse or circuit breaker box to the roof opening. The proper size wire can be determined from chart on page 3.

Note: If vent fan was removed, the existing wire may be used provided it is of proper size, location and correctly fused.

   a. This supply wire must be located in the front portion of the 362 mm x 362 mm (± 3 mm) opening.
   b. The power MUST be on an appropriately sized separate time delay fuse or circuit breaker. The proper protection can be determined from chart on page 3.
   c. Make sure that at least 381 mm of supply wire extends into the roof opening. This ensures an easy connection at the junction box.
   d. Wiring methods must comply with all national and local wiring codes and/or regulations.
   e. Protect the wire where it passes into the opening with approved method. See paragraph "d" above.

Note: These power supply connections may be replaced with type Y attachments if done by qualified personal.

E. Placing Unit On The Roof

⚠ CAUTION

This unit weighs approximately 45 Kilograms. To prevent back injury, use a mechanical hoist to place unit on roof.

1. Remove the unit from the carton and discard carton.
2. Place the unit on the roof.
3. Lift and place the unit over the prepared opening using the gasket on the unit as a guide. See FIG. 6.

FIG. 6

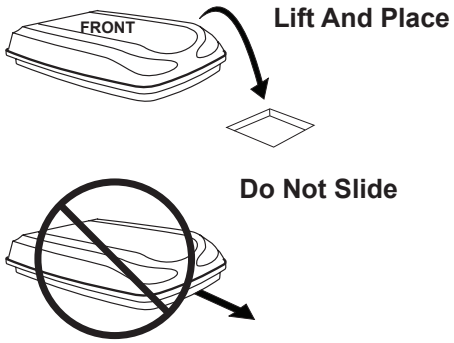

CAUTION

Do not slide the unit. This may damage the roof gasket attached to the bottom and may create a leaky installation.

4. Place the air distribution box kit inside the Caravan. This box contains mounting hardware for the unit and will be used inside the Caravan.

This completes the outside work. Minor adjustments can be done from the inside of the Caravan if required.

F. Installing The Unit

1. Remove air distribution box and mounting hardware from carton.
2. Check for correct alignment and adjust the unit as necessary (Roof gasket centers over the 362 mm x 362 mm (± 3 mm) opening.
3. Reach up into the return air opening and pull the unit electrical cord and heater cord (if applicable) down for later connection. See FIG. 7.

FIG. 7

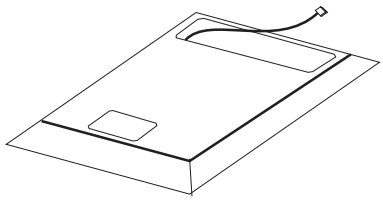

4. Base Pan Duct Adapter
   a. Remove the liner from the foam tape and position on the base so screw hole and air openings are aligned. Place flange of duct on right hand side when facing front. See FIG. 8.

FIG. 8

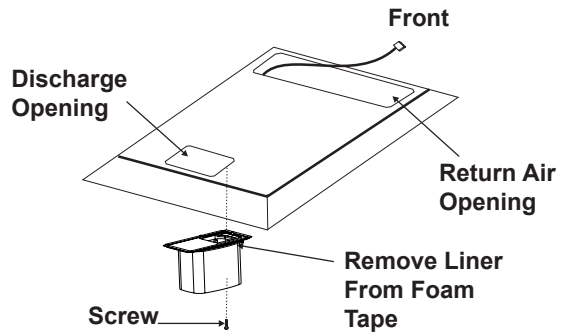

   b. Install # 10 screw to help hold the duct adapter to base pan if desired.
5. Ceiling template installation

Note: The large center hole in the ceiling template goes to the rear. Insure that the thermostat bulb is not moved during installation. See FIG. 10.

   a. Plug the nine pin cord from the unit and three pin (if available on unit) heater cord into the control box on the ceiling template. See FIG. 9.

FIG. 9

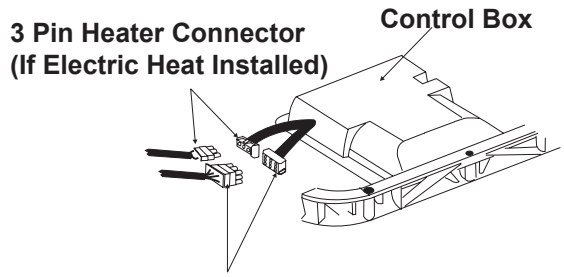

   b. Route the previously run 220 - 240 VAC power supply wire into the junction box on the ceiling template.
   c. Start each mounting bolt by hand before tightening them. The 3 threaded inserts in the base pan can be seen to aid in starting the bolts. See FIG. 10.

FIG. 10

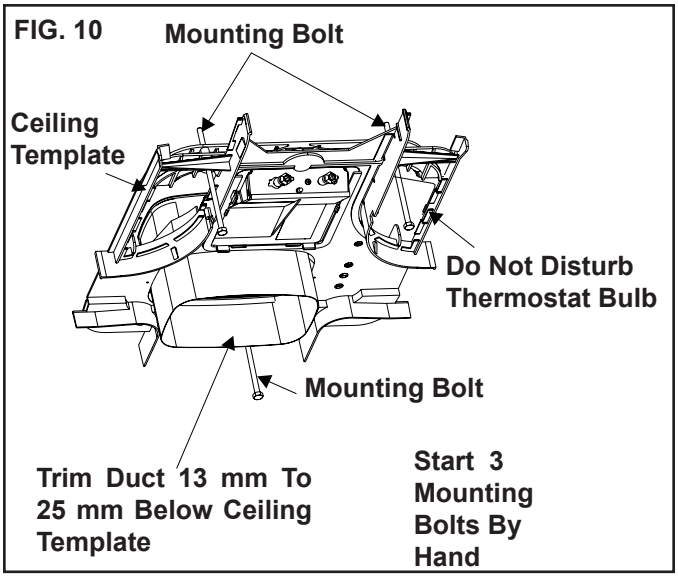

   d. **EVENLY TIGHTEN MOUNTING BOLTS TO A TORQUE OF 4.5 TO 5.6 NM** (Newton Meters). This will compress the roof gasket to approximately 13 mm. The bolts are self locking so further tightening is not necessary. See FIG. 10.

CAUTION

If bolts are left loose there may not be an adequate roof seal or if over tightened, damage may occur to the unit base or ceiling template. Tighten to torque specifications listed in this manual.

6. Template/Duct adapter
   a. Pull duct down through the template opening.
   b. Cut the duct 13 mm to 25 mm below the template opening. See FIG. 10.
   c. Align the template duct adapter with the template duct hole making sure the screw holes line up (if not, rotate 1/2 turn). Insert template duct adapter into duct. Leave one loop of wire below the duct adapter groove. Do not insert adapter tabs inside the duct.
   d. Snap duct adapter into template and install 2 screws through the duct adapter tabs into the ceiling template. See FIG. 11.

FIG. 11

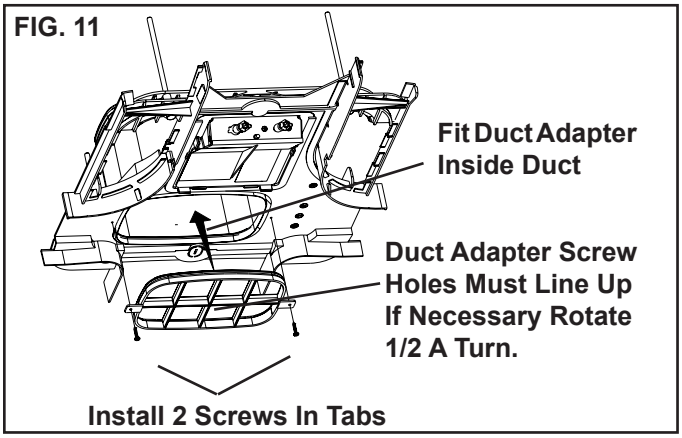

G. Wiring The System

⚠ WARNING

Disconnect 220 - 240 VAC. Failure to follow these instructions could create a shock hazard causing death or severe personal injury.

Important: The electrical installation must be done by an authorized electrician. In some areas electricians must be licensed.

1. 220 - 240 VAC power supply connection
   a. Connect the power supply line to the unit at the terminal block provided in the junction box. Connect to red, black and green/yellow wire (Active, Neutral and ⏚ respectively). See FIG. 12.

FIG. 12

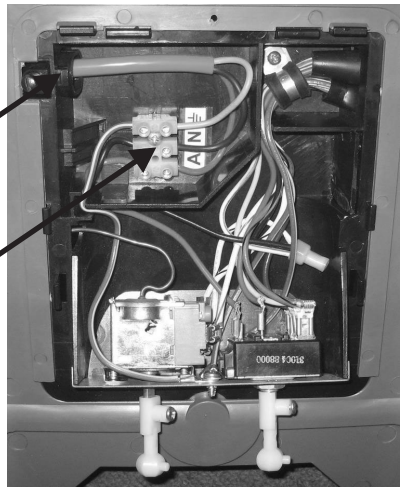

   b Tighten the strain relief onto the power supply line to hold firmly in place. Be careful not to damage wires. See FIG. 12.
   c. Carefully push all excess wire back into the junction box. Place cover edge under tabs and snap cover in place and secure with screw. See FIG. 13.

FIG. 13

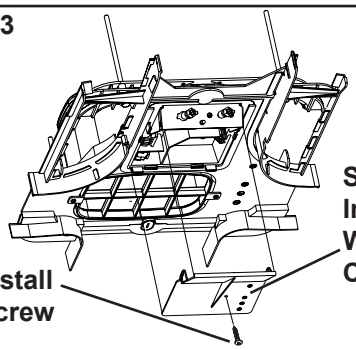

H. Air Distribution Box Installation

Important: The inner walls of the ADB go inside the walls of the ceiling template during installation.

1. Working from the rear looking forward with the rear tipped down 80 mm place the air distribution box inner walls against the inside of the template walls. Pull the air distribution box backwards until it touches the template. Raise the air distribution box to the ceiling. See FIGS. 14 & 15.

FIG. 14

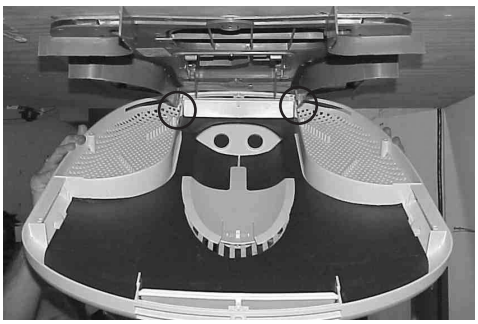

Position ADB Walls Inside And Against End Of Template Walls

Raise Back End Of ADB To Ceiling

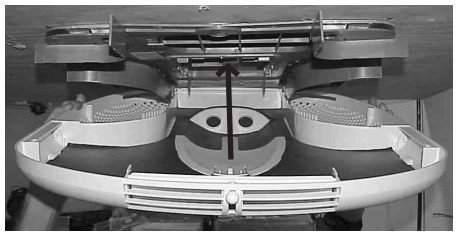

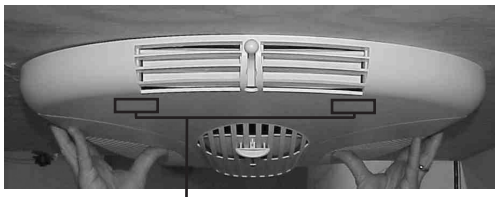

Push Here To Engage Latches, Then Remove Labels

FIG. 15

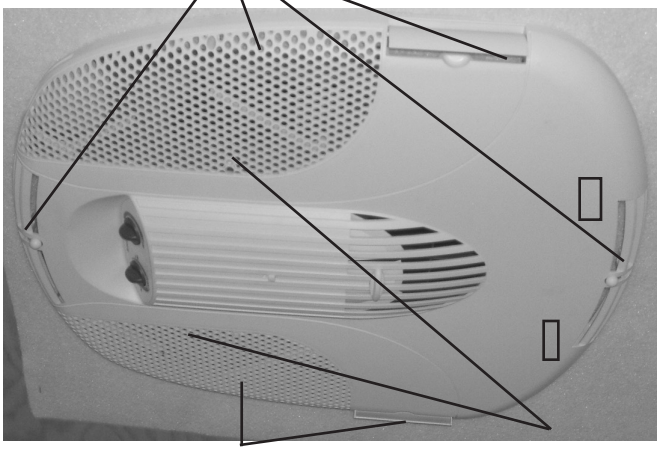

2. Push up on the ADB at the locations indicated by the paper labels to engage the snap locks. There will be a quiet click heard when each latch engages.
3. Hold the air distribution box to the ceiling with one hand and install two coarse threaded 3.5 mm X 19 mm sharp pointed screws in the location shown in FIG. 15. Do not use electric driver as you may strip the holes in the plastic.
4. Auxiliary screws may be installed at the locations shown. These are **NOT** required to secure the ADB to the template, but may be desired for aesthetic purposes in some ceiling geometries. See FIG. 15. Again, do not use an electric driver as you may over tighten the screws.
5. Filter installation. Slide filters into slots in air distribution box. The outward curved side of the filter handle faces the ceiling. See FIG. 19.
6. Knob installation. Install the two knobs provided on the ends of the thermostat and selector switch shafts. Align slot in the knob with the alignment post on shaft and push into position.
7. The power supply to the unit may now be turned **"ON"**.
8. Your unit is now installed and ready for operation. Read the following operating instructions before attempting to run the unit.

OPERATING INSTRUCTIONS

A. Controls

FIG. 16

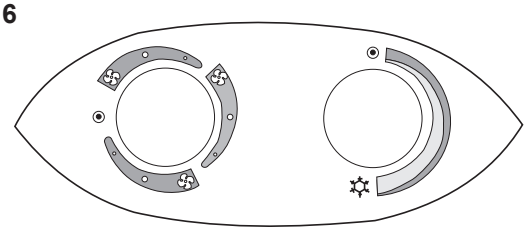

1. The selector switch has ten positions including **"OFF"**. This controls fan speed, heating mode, and cooling modes. See FIG. 16.
2. The thermostat controls the compressor ON/OFF operation for a temperature range from approx. 18.5° C to 32.5° C at the ADB inlet depending on the knob position. See FIG. 16.

Important: When the unit is turned on and the thermostat calls for cooling, the compressor will start. After shutting the unit down manually by either the selector switch or the thermostat, always wait 2-3 minutes before turning on the unit. This allows the refrigerant pressures in the unit system to equalize so the compressor may restart.

B. Cooling Operation (Blue Graphic)

1. Set the thermostat at the desired temperature level. See FIG. 17.

FIG. 17

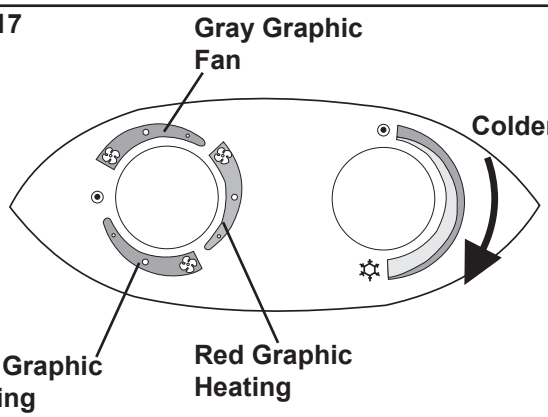

2. Select the fan speed that best satisfies your needs:
   a. **HIGH COOL**: Selected when maximum cooling and dehumidification required.
   b. **MED COOL**: Selected when normal or average cooling required.
   c. **LOW COOL**: Select to maintain room at desired comfort level. Normally this speed is used for night time operation.

The compressor will cycle off when the thermostat is satisfied. The fan runs when the compressor is off to help keep the temperature uniform throughout the Caravan.

C. Fan Only Operation (Gray Graphic)

1. This will circulate the air in your Caravan without cooling or heating. There are three positions: **HIGH FAN, MED FAN** or **LOW FAN** to select from, depending upon personal choice. See FIG. 17.

D. Heating Operation (Red Graphic)(Heat Strip or Heat Pump)

Note: The heat modes of operation will not replace a furnace for heating your Caravan in cold weather. The intent is to remove the chill on cool days or mornings.

1. Turn the selector switch to **"HEAT"**. There are three positions: **HIGH FAN, MED FAN** or **LOW FAN** to select from , depending upon personal choice. See FIG. 16.
   Use low fan speed with the electric heat strips (use of higher speeds will make the outlet air feel cool, but all heating speeds deliver the same watts of electric heat to the Caravan).
2. The blower will come on immediately. The heat function will start if the thermostat is not satisfied.
3. The compressor, if a heat pump, or element if resistance heat will "cycle off" when the thermostat is satisfied. The fan will continue to run helping keep the temperature throughout the Caravan uniform.

E. "OFF" Position (Selector Switch ⦿)

1. This is to turn unit off.

MAINTENANCE

A. Air Filter

1. Periodically (a minimum of every 2 weeks of operation) slide out the return air filters located on the end of the air distribution box. Wash the filters with soap and warm water, let dry and then reinstall.

Note: To insure easy future removal the filters need to be replaced with the domed side of their handle positioned towards the ceiling.

Note: Never run the unit without both return air filters in place. This will plug the unit evaporator coil with dirt and may substantially degrade the performance of the unit over time.

B. Air Distribution Box Housing

1. Clean air distribution box housing and control panel with a soft cloth dampened with a mild detergent. Never use furniture polish or scouring powders.

C. Fan Motor

1. The blower motor is factory lubricated and requires no service.

D. Frost Formation On Cooling Coil

1. Frost on a small portion of the coil is not unusual. Under certain conditions, ice may form on the evaporator coil. This is indicated by very cold output at very low air speed and the icing can be seen through the air inlet holes with the filters removed. If this should occur, inspect the filter and clean if dirty. Make sure air vents are open and not obstructed. Units have a greater tendency to frost when the outside temperature is relatively low. This may be prevented by adjusting the thermostat control knob to a warmer setting (counter clockwise). Should frosting continue, operate on any **FAN ONLY** setting until the cooling coil is free of frost; then resume normal operation. If frost condition persist, contact your local service center for assistance.
2. On Outdoor Coil While Heating
   a. Operation at low outdoor temperatures causes low coil temperatures. This can result in ice forming on the out door coil in certain conditions. This is indicated by reduced heat output and could fully stop fan rotation in extreme conditions. To avoid this the system controls turn off the compressor if out door temperature drops below 5.6° C. and returns heating when the temperature raises 2.8° C.

SERVICE-UNIT DOES NOT OPERATE

If your unit fails to operate or operates improperly, check the following before calling your service center.

A. If Caravan connected to motor generator, check to be sure motor generator is running and producing power.

B. If Caravan connected to power supply by a land line, check to be sure line is sized properly to run unit load and it is plugged into power supply.

C. Check your fuse or circuit breaker to see if it is open. Insure fuse is not burnt, or circuit breaker is "ON" and not activated.

D. After the above checks, call your local service center for further help. This unit must be serviced by qualified service personnel only.

E. If any wiring or supply cord is damaged and needs to be replaced, it must be replaced by the manufacturer or its service agent or a similarly qualified person.

F. When calling for service, always give the following:
1. Unit type and serial number found on identification label located on base pan of unit bottom. (Remove filter and view through network of holes)
2. Air distribution box model and serial number found on rating plate located on ceiling template. Observe this rating plate through the air distribution box right side vent opening.

G. Heater Element thermal reset (Type 3241 only) may be performed by qualified personal with an electrically insulated probe. See FIG. 18. The unit is disassembled from above to facilitate this. The unit should be reviewed at the time of reset to insure air flow is not blocked and motor is functioning properly. Disconnect the 220 - 240 VAC power supply prior to performing this reset.

⚠ WARNING

Disconnect 220 - 240 VAC. Failure to follow these instructions could create a shock hazard causing death or severe personal injury.

FIG 18

FIG. 19

ROOF MOUNT ASSEMBLY

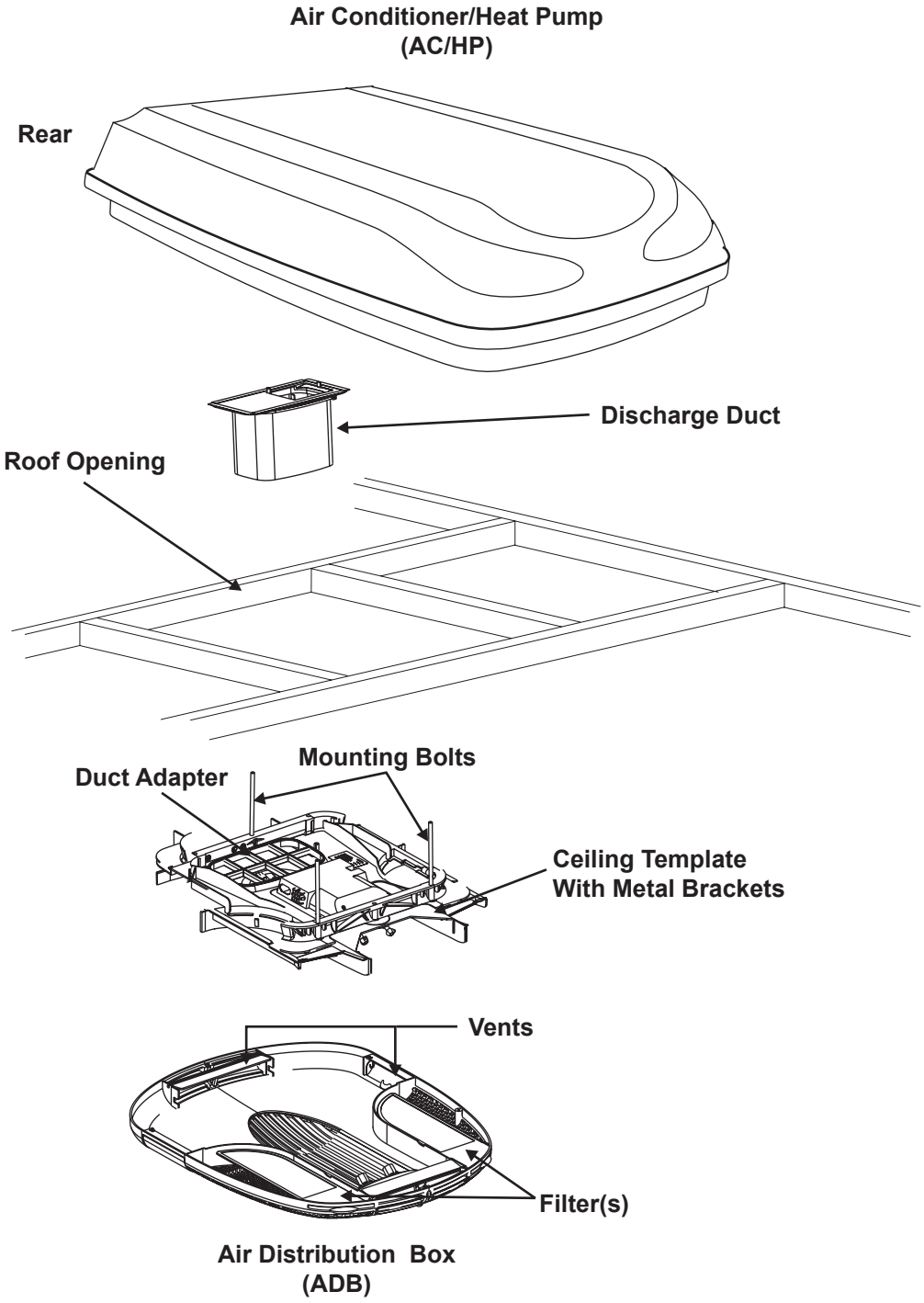

WIRING DIAGRAM

3241 Unit Wiring Diagram

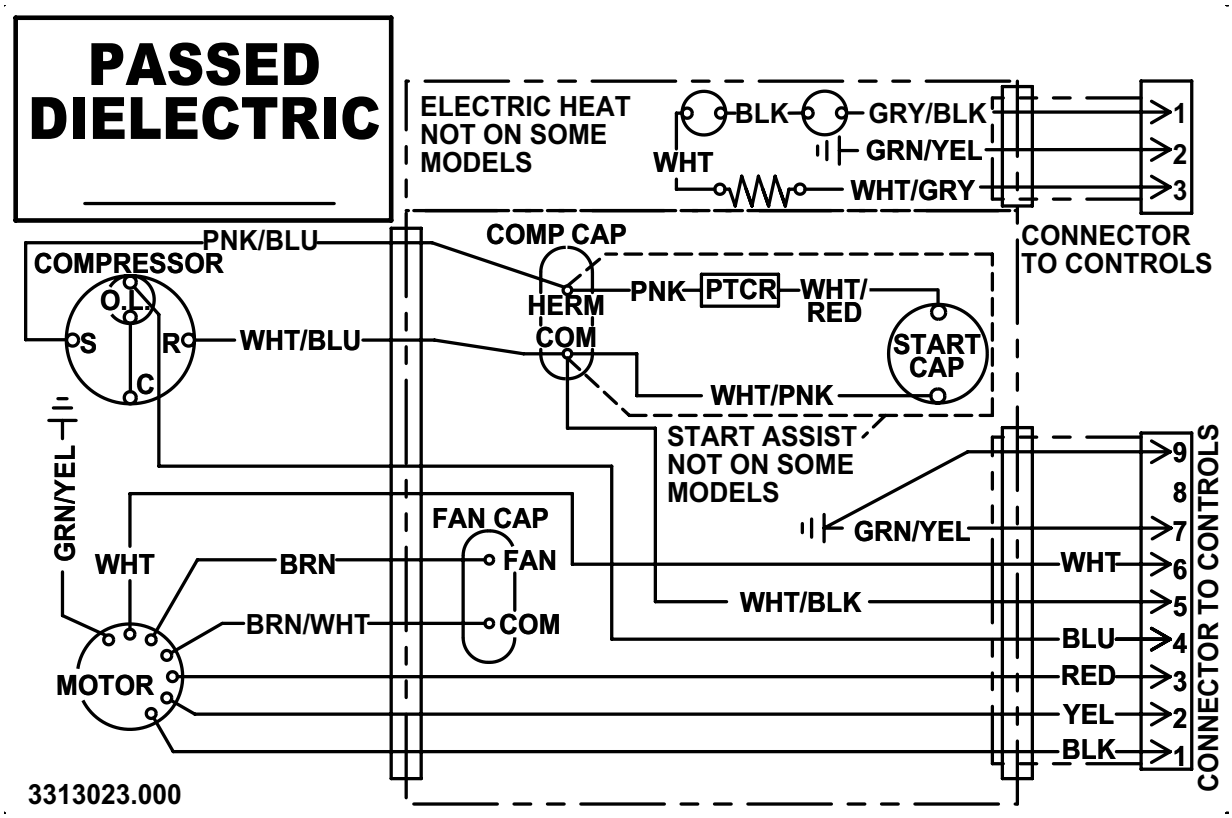

3310895.028 Air Distributation Box Wiring Diagram

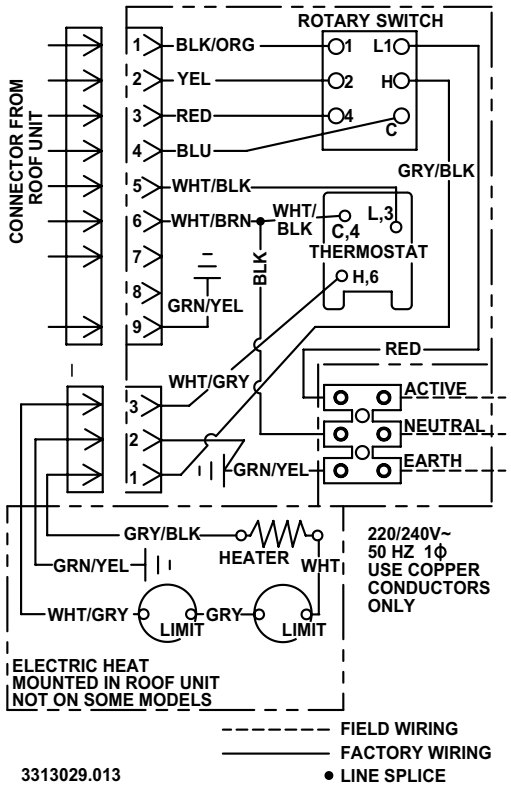

WIRING DIAGRAM

3242 Unit Wiring Diagram

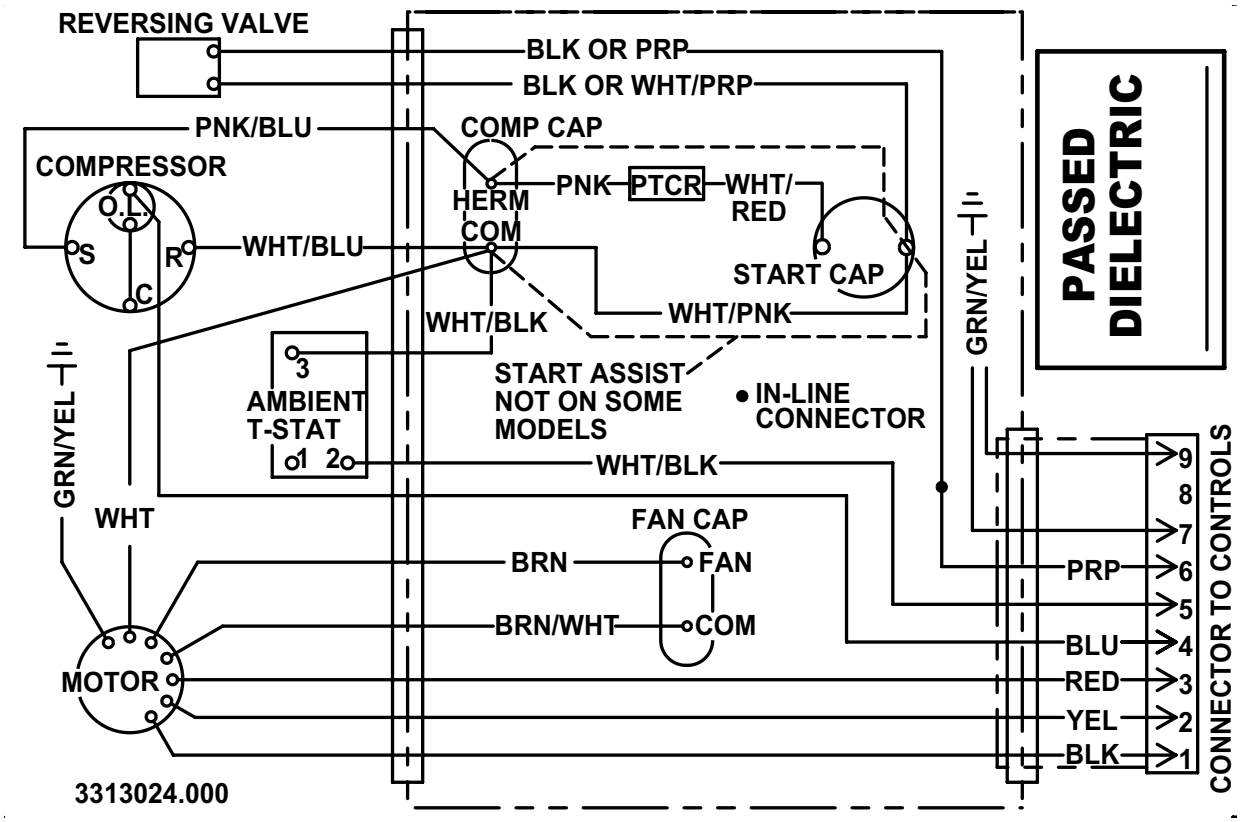
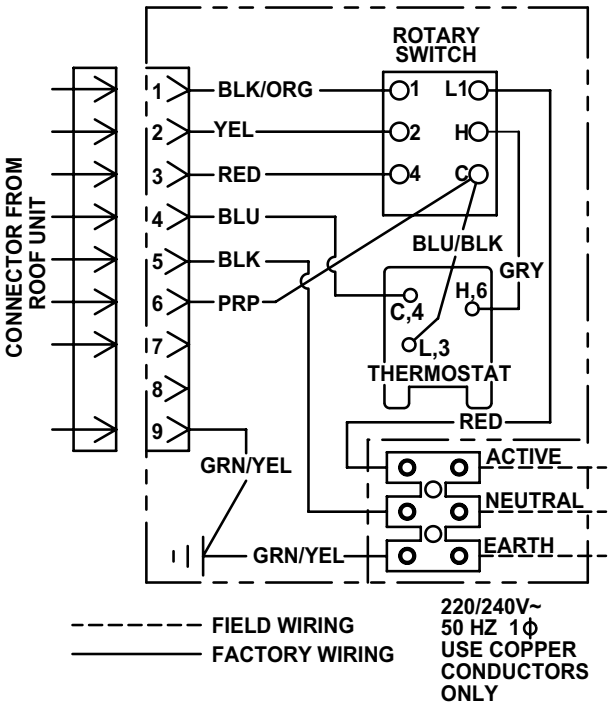
3311669.018 Air Distribution Box Wiring Diagram