User Manual

SZ MODELS

SPOT ZERO MOBILE

SZ MWD WH **SZ MWDZ WH**

2786 SW 3RD AVE
FORT LAUDERDALE, FL
Phone 954-533-5640
Email: info@spotzerowater.com
www.spotzerowater.com

TABLE OF CONTENTS

INTRODUCTION 4

Acronyms and Definitions 5
Congratulations 6
Safety 6
Principles of Reverse Osmosis 7
Reverse Osmosis and Spot Zero™ 8
Unit Specifications 9
Operating Specifications 10

DOCKSETUP INSTRUCTIONS 12

Dimensions 13
Electrical Requirements 14
Plumbing and Piping Connections 15

OPERATION AND MAINTENANCE 18

Normal Operation 19
Flushing 24
Membrane Performance Check 25
Membrane and Filter Removal and Replacement 26

TROUBLESHOOTING 32

Reverse Osmosis Troubleshooting 33

PARTS 34

SZ Mobile Series Parts List 35
SZ Mobile Drawings 36

WARRANTY INFORMATION 38

Owner's Limited Warranty 39

This Page Intentionally Left Blank

INTRODUCTION

ACRONYMS AND DEFINITIONS

ACRONYM	DEFINITION
FWF	FRESH WATER FLUSH
RO	REVERSE OSMOSIS
PSI	POUNDS PER SQUARE INCH
GPM	GALLONS PER MINUTE
GPD	GALLONS PER DAY
TDS	TOTAL DISSOLVED SOLIDS
PPM	PARTS PER MILLION
TCF	TEMPERATURE CORRECTION FACTOR
VOCs	VOLATILE ORGANIC COMPOUNDS

CONGRATULATIONS

Your Dometic Spot Zero™ Reverse Osmosis System is a durable piece of equipment which, with proper care, will last for many years. This User's Manual outlines operation, maintenance and troubleshooting details vital to the sustained performance of your system.

SAFETY

The safety section of this User's Manual outlines the various safety headings used throughout this manual's text and are enhanced and defined below:

NOTE: INDICATES STATEMENTS THAT PROVIDE FURTHER INFORMATION AND CLARIFICATION.

NOTE: PRIOR TO OPERATING OR SERVICING THE DOMETIC SPOT ZERO™ REVERSE OSMOSIS SYSTEM, THIS USER'S MANUAL MUST BE READ AND FULLY UNDERSTOOD. KEEP IT AND OTHER ASSOCIATED INFORMATION FOR FUTURE REFERENCE AND FOR NEW OPERATORS OR QUALIFIED PERSONNEL NEAR THE SYSTEM.

CAUTION: INDICATES STATEMENTS THAT ARE USED TO IDENTIFY CONDITIONS OR PRACTICES THAT COULD RESULT IN EQUIPMENT OR OTHER PROPERTY DAMAGE.

DO NOT UNDER ANY CIRCUMSTANCE; REMOVE ANY CAUTION, WARNING, OR OTHER DESCRIPTIVE LABELS FROM THE SYSTEM.

WARNING: INDICATES STATEMENTS THAT ARE USED TO IDENTIFY CONDITIONS OR PRACTICES THAT COULD RESULT IN INJURY OR LOSS OF LIFE. FAILURE TO FOLLOW WARNINGS COULD RESULT IN SERIOUS INJURY OR EVEN DEATH.

PRINCIPLES OF REVERSE OSMOSIS

REVERSE OSMOSIS

How Fresh Water Is Produced

Reverse Osmosis or “RO” is a process where freshwater water is produced by pumping saltwater through a semi-permeable membrane.

Osmosis

Osmosis is a naturally occurring process where a weak solution will cross a semi-permeable membrane to mix with a highly concentrated solution. For example a freshwater solution will naturally want to mix with a saltwater solution.

Process of Osmosis

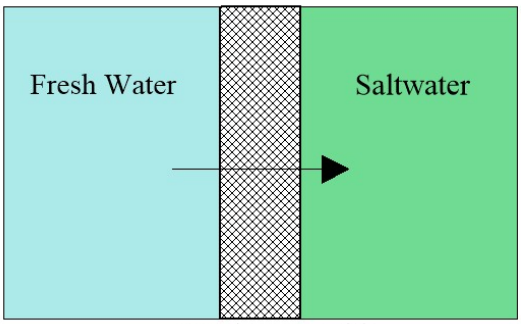

Semi-Permeable Membrane

Reverse Osmosis

To reverse this process work is put into the system using a pump. The pump causes pressure to build up on the saltwater side of the membrane. This pressure forces water across the semi-permeable membrane. The membrane is designed to allow the water molecules to pass while preventing the salt and other solids from doing so. Fresh water is collected on the other side of the membrane as a result.

Process of Reverse Osmosis

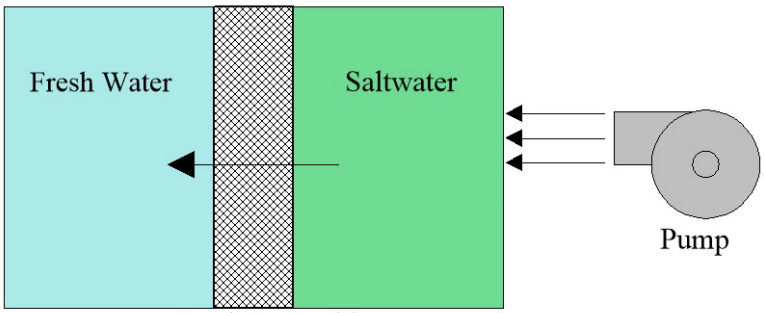

Semi-Permeable Membrane

REVERSE OSMOSIS AND SPOT ZERO

DOMETIC SPOT ZERO™

The Dometic Spot Zero™ Portable Fresh Water Reverse Osmosis System accepts pressurized fresh water from a garden hose and then purifies it through a 5 stage process.

WATER FILTRATION RANGE AND SIZING TABLE

The sizing table shows what reverse osmosis can remove from your water. This result is very few impurities in your product water.

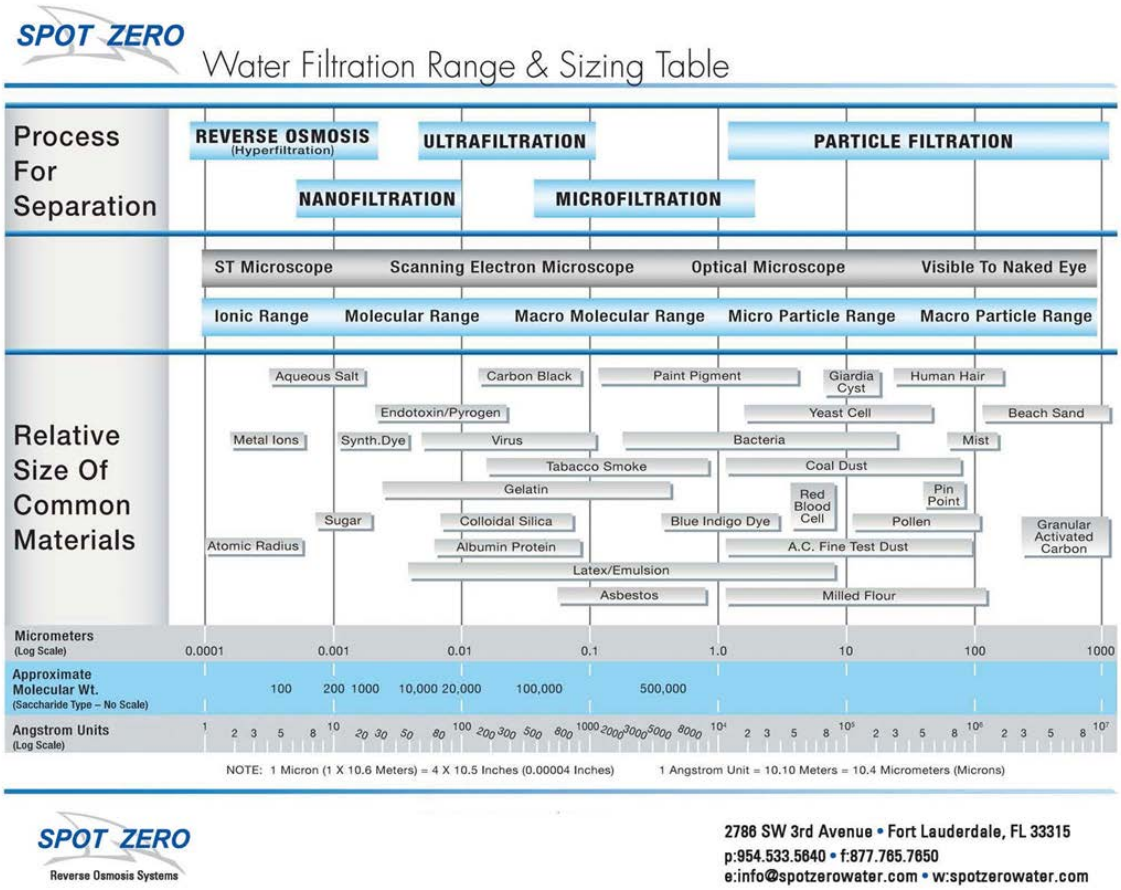

UNIT SPECIFICATIONS

SZ MODEL	SZ MWD WH	SZ MWDZ WH
Configuration	2 Vessel	2 Vessel
Feed Water Source	Tap Water	Tap Water
Rejection and Flow Rates		
Nominal TDS Rejection %	90%	90%
Connections		
Feed	¾” Hose	¾” Hose
Product	¾” Hose	¾” Hose
Concentrate	¾” Hose Barb	¾” Hose Barb
Membranes		
Membrane Per Vessel	1	1
Membrane Quantity	2	2
Membrane Size	4039	4039
Pumps		
Pump Type	Jet	Jet
Motor HP (kw)	.5 (.37)	.5 (.37)
Pump RPM @ 60	3450	3450
Electrical		
Voltage	115V 60Hz 1PH	230V 50/60Hz 1PH
Amp Draw	10.0	5.0
System Dimensions		
L x W x H inch (cm)	48.33”x 27.00”x21.54”(122.76x68.58x54.75)	48.33”x 27.00”x21.54”(122.76x68.58x54.75)
Weight lb. (kg)	140 (63.5)	140 (63.5)

OPERATION SPECIFICATIONS

BEFORE STARTING

Your system is designed to operate at a pressure of 80-150 psi. The recovery set for your system is approximately 75%. Use a good quality hose capable of handling 150psi.

PRE-FILTRATION

Dometic Spot Zero™ systems are supplied with a pre-filter (part # SZ-MS3) that filters out most particles over 1 micron and removes chlorine, chloramine, VOCs and heavy metals. Pre-filters should be changed every 10,000 gallons of use. The pump must NEVER be run dry. Operating the pump without sufficient feed water will damage the pump. ALWAYS use the required pre-filter when running the system. The pump is susceptible to damage from sediment and debris. Do not attempt to clean used filter cartridges.

CAUTION: IF THE PRE-FILTER BECOMES CLOGGED AND THE WATER FLOW TO THE PUMP IS REDUCED OR INTERRUPTED, CAVITATION WILL OCCUR. THIS WILL DAMAGE THE PUMP.

PUMP AND MEMBRANE

The membranes and high pressure pumps used on Dometic Spot Zero™ systems require a continuous and non-turbulent flow of water to the system with a minimum feed pressure of 20 psi during operation, which does not exceed 113°F.

CAUTION: ANY RESTRICTIONS OR BLOCKAGE IN THE DISCHARGE LINE CAN CAUSE BACK PRESSURE, WHICH WILL INCREASE THE SYSTEM'S OPERATING PRESSURE. THIS CAN RESULT IN DAMAGE TO THE SYSTEM'S COMPONENTS AND POSSIBLE LEAKS OF COMPONENTS OR TUBING.

OPERATION SPECIFICATIONS

FEED WATER

Nothing has a greater effect on a reverse osmosis system than the feed water quality. Specifications for feed water is in the table below:

Maximum Feed Temperature °F (°C)	113 (45)
Minimum Feed Temperature °F (°C)	40 (4.4)
Maximum Ambient Temperature °F (°C)	100 (37.7)
Minimum Ambient Temperature °F (°C)	40 (4.4)
Maximum Feed Pressure psi (bar)	85 (5.9)
Minimum Feed Pressure psi (bar)	20 (3.1)
Maximum Operating Pressure psi (bar)	150 (10.34)
Minimum SDI Rating	< 3
Maximum Free Chlorine ppm	0
Maximum TDS ppm	1,000
Maximum Hardness gpg	0
Maximum pH (Continuous)	9
Minimum pH (Continuous)	6
Maximum Turbidity NTU	1

NOTE: HIGHER TDS AND/OR LOWER FEED WATER TEMPERATURES WILL REDUCE THE SYSTEM'S PRODUCTION.

NOTE: IT IS VERY IMPORTANT TO MEET THE MINIMUM FEED WATER REQUIREMENTS. FAILURE TO DO SO WILL CAUSE THE MEMBRANES TO FOUL AND VOID THE MANUFACTURER'S WARRANTY.

DOCK SETUP INSTRUCTIONS

DIMENSIONS

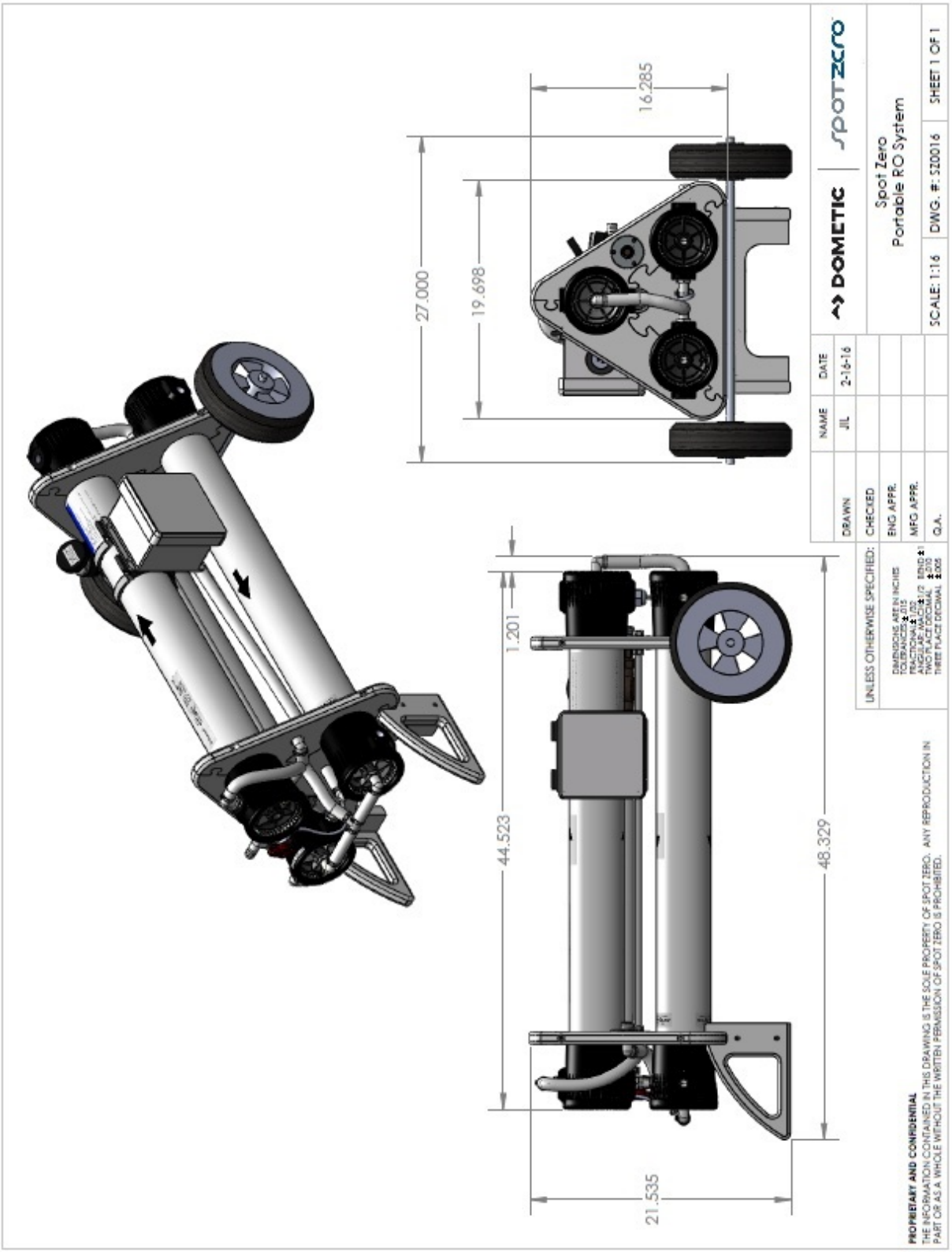
27.000
19.698
16.285
1.201
44.523
48.329
21.535
NAME
DATE
DRAWN
JIL
2-16-16
CHECKED
ENG APPR.
MFG APPR.
Q.A.
UNLESS OTHERWISE SPECIFIED:
DOMETIC
spotzero
Spot Zero
Portable RO System
SCALE: 1:16
DWG. #: S20016
SHEET 1 OF 1
PROPRIETARY AND CONFIDENTIAL
THE INFORMATION CONTAINED IN THIS DRAWING IS THE SOLE PROPERTY OF SPOT ZERO. ANY REPRODUCTION IN PART OR AS A WHOLE WITHOUT THE WRITTEN PERMISSION OF SPOT ZERO IS PROHIBITED.

ELECTRICAL REQUIREMENTS

ELECTRICAL

The motors used on Dometic Spot Zero™ systems are pump and motor combinations. They are available in single-phase 115 volt or 230 volt AC. Please ensure that the electrical circuit supplying the system is compatible with the requirements of the specific Dometic Spot Zero™ model. Use GFCI protected outlet only.

- 115 volts at 10 amps
- 230 Volt at 5 amps
- 50/60 Hertz

NOTE: IT'S RECOMMENDED THAT A QUALIFIED ELECTRICIAN WIRE YOUR SYSTEM IN ACCORDANCE WITH ALL APPLICABLE CODES, RULES, AND REGULATIONS.

WARNING: TO REDUCE THE RISK OF ELECTRICAL SHOCK, THE INCOMING POWER SUPPLY MUST INCLUDE A PROTECTIVE GROUND.

PLUMBING AND PIPING CONNECTIONS

PLUMBING

The feed water connection is ¾” male garden hose type thread fitting.

The product outlet is a ¾” male garden hose type thread fitting

PLUMBING AND PIPING CONNECTIONS

PLUMBING

The discharge of the concentrate is ¾” hose barb and does not require any hose connection. However it maybe run to an open field or landscape area in a free and unrestricted manner. This water can be used for irrigation.

CAUTION: ANY RESTRICTIONS OR BLOCKAGE IN THE SYSTEMS DISCHARGE CONNECTION CAN CAUSE BACK PRESSURE, WHICH WILL INCREASE THE SYSTEM’S OPERATING PRESSURE. THIS CAN RESULT IN DAMAGE TO THE SYSTEM’S COMPONENTS AND POSSIBLE LEAKS OF COMPONENTS OR TUBING.

PLUMBING AND PIPING CONNECTIONS

DOCKSIDE PRE-FILTER (OPTIONAL)

The dockside pre-filter is recommended for the SZ Mobile if inlet of water exceeds 500ppm. Plumbing connections are 3/4" FNPT on the inlet and outlet, which are also labeled on the housing.

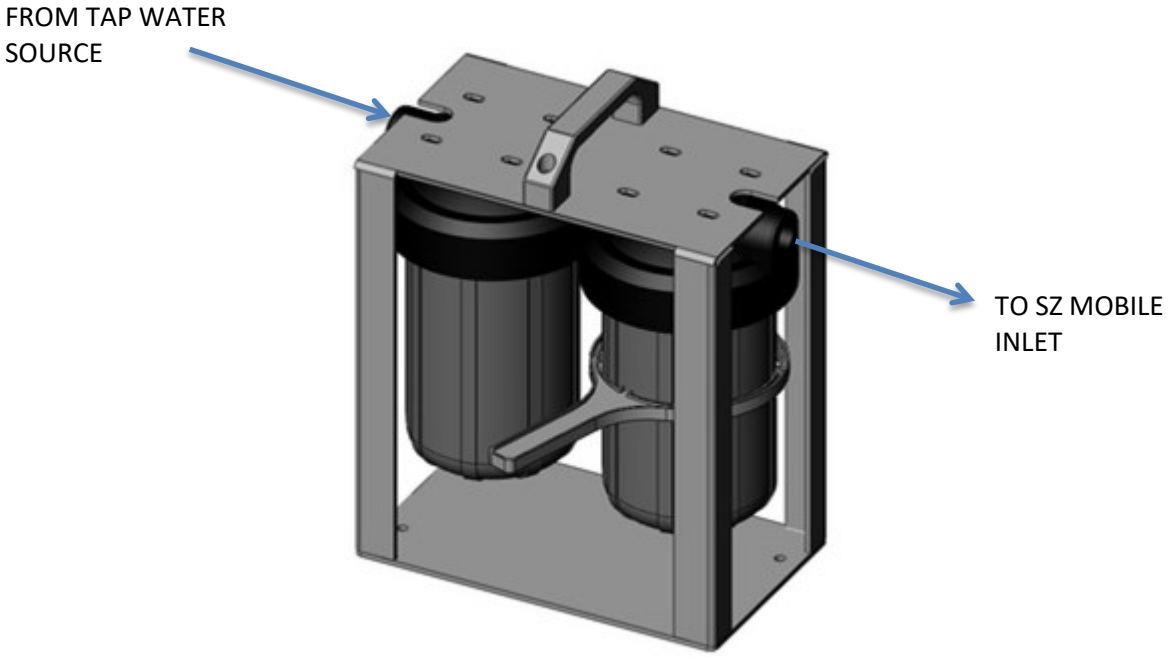

OPERATION AND MAINTENANCE

NORMAL OPERATION

START UP

1. Attach feed water to the water supply fitting with a garden hose to the port labeled **WATER SUPPLY**.

2. Attach garden hose to the connection lableled **Spot Zero WATER.** Use a garden hose rated a minimum of 150 psi to avoid bursting.

NORMAL OPERATION

START UP

3. Open the flush valve to the purge position to allow air to purge from the system for 60 seconds

4. Plug in AC Power, from a GFCI protected outlet, to the system. (Use GFCI outlet only)

WARNING: A GFCI PROTECTED OUTLET SHOULD BE USED TO SUPPLY POWER TO THIS SYSTEM.

NORMAL OPERATION

START UP

5. Close the flush valve to the normal position.

6. Wash down vessel with system.

NORMAL OPERATION

SHUT DOWN

1. Open the flush valve to the purge position and allow water to flush system for 60 seconds for every hour of use.

2. Close flush valve to the normal position for storage.

NOTE: TO PREVENT SYSTEM DAMAGE THE PRE FILTER SHOULD BE REPLACED EVERY 10,000 GALLONS OF USE.

NOTE: USE A GARDEN HOSE RATED AT A MINIMUM OF 150PSI TO AVOID COLLAPSING OR BURSTING.

NORMAL OPERATION

OPERATIONAL DO's AND DON'Ts

DO

1. Do change filter cartridge (SZ-MS3) every 10,000 gallons to prevent membrane damage
2. Do run the system often
3. Do perform weekly system flushes
4. Replace membranes every 100,000 gallons.

DON'T

1. Don't re-use filter cartridges
2. Don't exceed 10mph when pushing or pulling the system
3. Don't run machine without water supply
4. Don't use unapproved pre-filter cartridges, membrane damage may occur
5. Don't leave system unused for long periods of time (if system is not use for more than 30 days then the unit should be flushed to prevent biological fouling)
6. Don't expose system to temperatures below 32°F (0°C)

FLUSHING

SYSTEM FLUSH

A system flush occurs each time during the **NORMAL OPERATION** of start-up and shut-down. Placing the flush valve in the position of **FLUSH** for 60 seconds will flush the system. It is recommended that for every hour of use that a flush is to be done.

MEMBRANE PERFORMANCE CHECK

MEMBRANE REJECTION %

1. With a handheld TDS meter, record a reading of the dock water feed in PPM

2. Calculate Membrane Rejection

$$= \frac{\textbf{Feed Water parts per million (PPM) of total dissolved solids} - \textbf{Product Water PPM}}{\textbf{Feed Water PPM of TDS}}$$

Example:

$$\frac{(\textbf{117 ppm of Feed Water} - \textbf{4 ppm of Product Water})}{\textbf{117 PPM of feed TDS}} = \textbf{96.58\% Rejection}$$

NOTE: REJECTION RATES ABOVE 90% @77°F INDICATES ACCEPTABLE MEMBRANE PERFORMANCE

NOTE: TO GET BEST RESULTS FROM THE SYSTEM, CHANGE MEMBRANES EVERY 100,000 GALLONS

NOTE: IF MEMBRANE IS NOT USED FOR OVER A MONTH THEN A 5 MINUTE SYSTEM FLUSH IS RECOMMENDED IN ORDER TO PREVENT BIOLOGICAL FOULING

MEMBRANE AND FILTER REMOVAL AND REPLACEMENT

REMOVAL AND REPLACEMENT (FILTER)

Changing filters in pressure vessels is an easy process if you have the proper information and tools. Please refer to the following instructions when removing and replacing elements:

1. Locate the inlet end of the pressure vessel, which is opposite the flow direction.

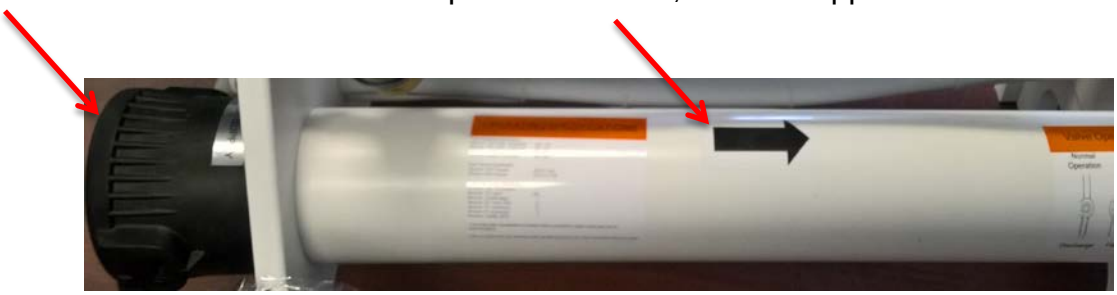

2. Remove the lock screw and then remove the yellow snap ring lock at the end of the pressure vessel

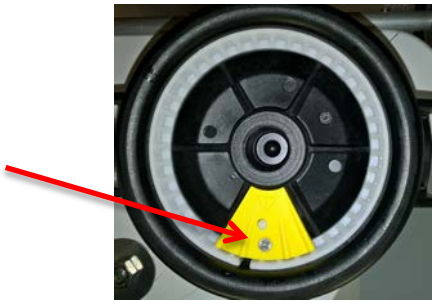

3. Remove the white nylon snap ring from the end cap

MEMBRANE AND FILTER REMOVAL AND REPLACEMENT

REMOVAL AND REPLACEMENT (FILTER)

4. Remove the end cap from the pressure vessel, using the filter removal tool.

5. Remove filter and discard.
6. Install the SZ MS3 (dometic#) filter, push all the way in.

NOTE: PLACE FILTER IN HOUSING THE DIRECTION THE ARROWS ARE POINTING

MEMBRANE AND FILTER REMOVAL AND REPLACEMENT

REMOVAL AND REPLACEMENT (FILTER)

7. Put end cap and snap ring in place. Install yellow snap ring lock and lock screw.

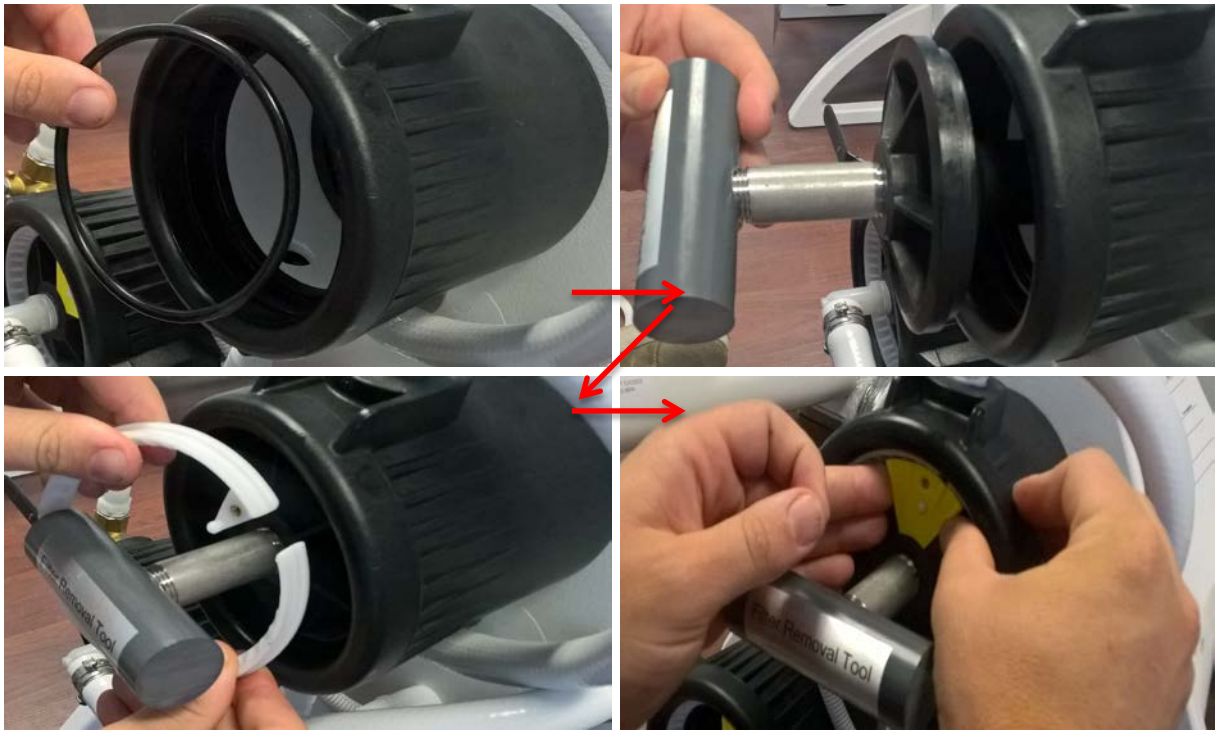

NOTE: THE NEW FILTERS HAVE A MEMBRANE CLEANER IN THEM THAT WILL CLEAN SOME IMPURITIES ON THE MEMBRANE FILM. THIS CLEANER WILL RESTORE OVERALL EFFICIENCY OF THE SYSTEM. DO NOT USE ANY PRODUCT WATER UNTIL DONE WITH THE FOLLOWING STEPS.

8. Bleed air and water out of the system through the flush valve for 60 seconds, turn water off and let membrane cleaner solution soak for 30 minutes
9. Turn water back on and flush for 10 minutes to remove residual cleaner
10. Return to normal use.

MEMBRANE AND FILTER REMOVAL AND REPLACEMENT

REMOVAL AND REPLACEMENT (MEMBRANE)

Changing membranes in pressure vessels is an easy process if you have the proper information and tools. Please refer to the following instructions when removing and replacing elements:

1. Locate the inlet end of the pressure vessel, which is opposite the flow direction.

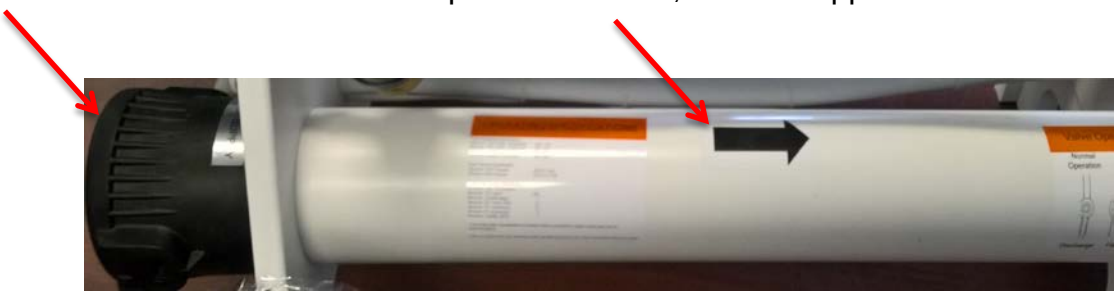

2. Remove the lock screw and then remove the yellow snap ring lock at the end of the pressure vessel

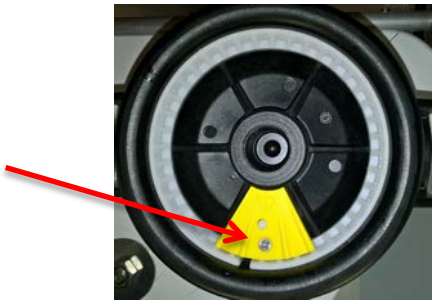

3. Remove the white nylon snap ring from the end cap

MEMBRANE AND FILTER REMOVAL AND REPLACEMENT

REMOVAL AND REPLACEMENT (MEMBRANE)

4. Remove the end cap from the pressure vessel, using the filter removal tool.

5. Slowly remove the membrane element from the pressure vessel being careful not to grasp it by the product tube. Needle nose pliers may be necessary to pull the old membrane element out of the pressure vessel.

6. Remove new membrane element from container and inspect. Make sure that all parts are clean and free from dirt. Examine the brine seal, and product tube for nicks or cuts. Replace the O-rings or brine seal if damaged.

7. Lubricate the brine seal with a food grade lubricant.

8. Install the membrane element so the brine seal will be located and the opposite end of the flow direction.

MEMBRANE AND FILTER REMOVAL AND REPLACEMENT

REMOVAL AND REPLACEMENT (MEMBRANE)

9. At a slight angle insert membrane while slightly rotating element being careful not to tear or flip the brine seal. Re-lube the brine seal if necessary.

10. With a smooth and constant motion, push the membrane element into the housing so that the brine seal enters the housing without coming out of the brine seal groove. A slow twisting motion should be used to insert the membrane element, to ensure that the brine seal stays in place.

11. Reinstall the end caps by gently twisting the end cap while pushing it onto the housing. Ensure that you do not pinch or fatigue any o-rings while pushing the end plug on. Push the end plug on until the outer diameter of the plug is flush with the outer diameter of the membrane housing.

12. Re-install the white nylon snap ring and the yellow snap ring lock

NOTE: AS TIME PROGRESSES, THE EFFICIENCY OF THE MEMBRANE WILL BE REDUCED. THE PRODUCT FLOW RATE WILL BEGIN TO DECLINE SLIGHTLY, BUT CAN BE EXTENDED WITH REGULAR FLUSHING OF THE SYSTEM.

TROUBLESHOOTING

REVERSE OSMOSIS TROUBLESHOOTING

TROUBLESHOOTING CHART FOR SZ MOBILE

SYMPTOMS	POSSIBLE CAUSES	CORRECTIVE ACTION
LOW PRODUCT FLOW	Cold feed water	See temperature correction sheet
	Low operating pressure	Adjust throttle and concentrate valve
	Defective membrane brine seal/ membrane installed backwards	Replace brine seal and / or reposition membranes
	Fouled or scaled membrane	Clean membranes
	Damaged product tube O-rings	Inspect and/or replace
HIGH PRODUCT FLOW	Damaged or oxidized membrane	Replace membrane
	Exceeding maximum feed water temperature	See temperature correction sheet
	Low operating pressure	Adjust concentrate valve
POOR PRODUCT QUALITY	Damage product tube O-rings	Inspect and/or replace
	Damaged or oxidized membrane	Replace membrane
MEMBRANE FOULING	Scaling ($CaSO_4$, $CaSO_3$, $BaSO_4$, SiO_2)	Clean with cleaning cartridge. Check for over production, conduct weekly maintenance flush.
	Trapped sediment media	Replace membrane, check pre-filtration
	Chlorine oxidation	Check chlorine feed equipment and de-chlorination system.
HIGH PUMP PRESSURE (<150 PSI)	Cold feed water	See temperature correction sheet
	Membrane fouling	See membrane fouling in this chart
LOW TO NONE PRODUCT FLOW	Failed restrictor	Call technical support

PARTS

SZ MOBILE SERIES PARTS LIST

DRAWING	PART NUMBER	DESCRIPTION
N/A	252405005	T-HANDLE FILTER/MEMBRANE REPLACEMENT TOOL
	252405006	SZ PORTABLE COVER
	SZ MS3	SEDIMENT/CHLORINE FILTER
SPOT ZERO VESSEL & MEMBRANE EXPLOSION *SHEET 1*	N/A	MEMBRANE VESSEL
	252404000	MEMBRANE
	252404097	VESSEL O-RING
	252404098	PRODUCT O-RING
	252404264	BRINE SEAL
		MEMBRANE VESSEL END CAP
		SNAP RING
		SNAP RING LOCK
		LOCK SCREW
HANDHELD TDS	252404040	DIGITAL HANDHELD TDS METER
DOCKSIDE PRE-FILTER (OPTIONAL)	252404297	DOCKSIDE PRE-FILTER (OPTIONAL)

SZ MOBILE DRAWINGS

VESSEL AND MEMBRANE

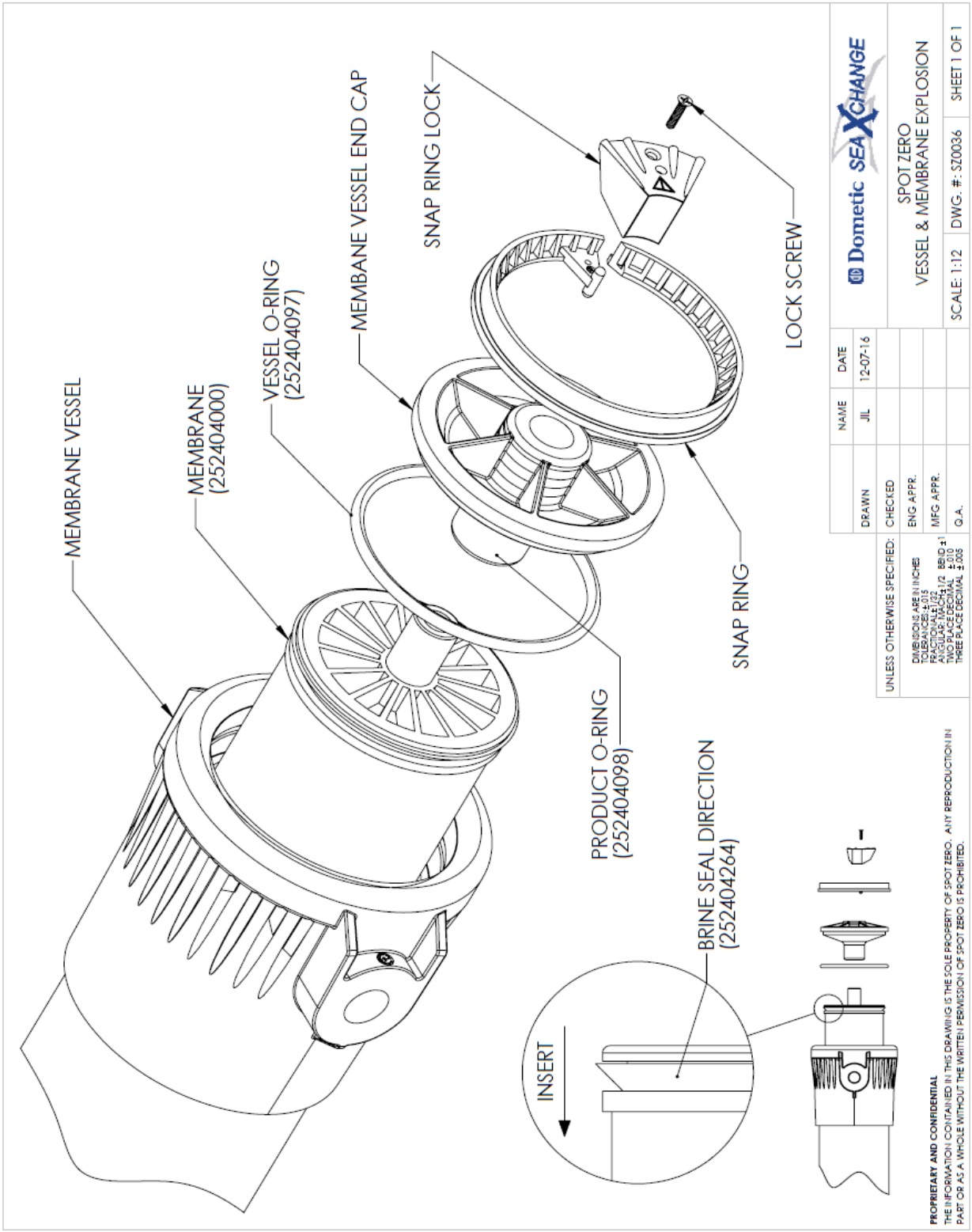

SZ MOBILE DRAWINGS

HAND HELD TDS METER

Hand Held TDS
252404040

DOCKSIDE PRE-FILTER (OPTIONAL)

252404297

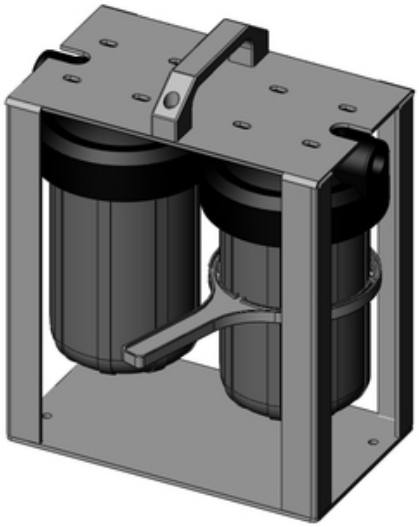

WARRANTY INFORMATION

OWNER'S LIMITED WARRANTY

Dometic Corporation (Dometic) warrants to the original purchaser/owner, and to subsequent owners during the applicable Limited Warranty Period, Dometic's Water Purification Products, Pumps, Related Accessories and Replacement Parts against failure from defects in material or workmanship arising in the periods specified in the Table of Limited Warranty Periods below. If a covered product or part fails during the applicable warranty period, Dometic will remedy same by repairing or replacing the defective warranted product or part as outlined below in the Table of Limited Warranty Periods. Defective parts shall be replaced free of charge and labor shall be paid for by Dometic only as set forth in the Table. Dometic reserves the right to refund the purchase price of the subject product or part as an alternative remedy to repair or replacement. The remedy allowed hereunder (repair, replacement or refund) shall be at Dometic's sole option.

SECTION I

WHAT'S COVERED

What does the Limited Warranty cover?

Water Purification Products, Pumps, Related Accessories and Replacement Parts manufactured and/or marketed by Dometic for the durations set forth in the Table of Limited Warranty Periods.

What is disclaimed, and are the warranties and remedies exclusive of all others?

Dometic does not disclaim the implied warranty of merchantability, but limits the duration of that implied warranty to the duration of the Limited Warranty offered herein.

This Limited Warranty, as well as the implied warranty of merchantability and the remedies offered by Dometic herein, are EXCLUSIVE and are made or provided in lieu of all other express or implied warranties, obligations, or liabilities. In no event shall Dometic be responsible or liable for any incidental or consequential damages alleged to have resulted from any defect in or failure of any warranted product or part. In those instances in which a cash refund is made, **such refund shall effect the cancellation of the contract of sale and such refund shall constitute full and final satisfaction of all claims which the purchaser has or may have against Dometic due to any actual or alleged breach of warranty, either express or implied, including, without limitation, the implied warranty or merchantability or fitness for a particular purpose.** Some states do not allow the exclusion or limitation of incidental or consequential damages so the above limitation may not apply to you. Some states do not allow limitations on how long an implied warranty lasts, so the above limitation may not apply to you.

The Dealer is not an agent for Dometic, except for the purpose of administering the above warranty to the extent herein provided. Dometic does not authorize the dealer or any other person to assume for Dometic any liability in connection with such warranty, or any liability or expense incurred in the replacement or repair of its products other than those expressly authorized herein. Dometic shall not be responsible for any liability or expense except as is specifically authorized and provided herein.

Dometic reserves the right to improve its products, through changes in design or material without being obligated to incorporate such changes in products of prior manufacture. Dometic can make changes at any time in design, materials, or part of units of any one, model year, without obligation or liability to owners of units of the same year's model of prior manufacture.

This warranty gives you, the purchaser/owner, specific legal rights, and you may also have other rights which vary from state to state.

OWNER'S LIMITED WARRANTY

SECTION II

WHAT'S NOT COVERED

What does this Limited Warranty not cover?

This Warranty Shall Not Apply to:

1. Failures resulting from improper installation or use contrary to instructions.
2. Failures resulting from abuse, misuse, accident, fire, or submergence.
3. Any part manufactured by Dometic, which shall have been altered so as to impair its original characteristics.
4. Any parts which fail as a result of misuse, improper application or improper installation.
5. Items not manufactured by Dometic, i.e., items, which are purchased from another manufacturer and supplied as received by Dometic without alteration or modification except as any part of a Dometic manufactured unit or component.
6. Components or parts used by or applied by the purchaser, as an integral part of products not manufactured by Dometic.
7. Labor resulting from difficult access to a Dometic product. The original installer or OEM is responsible for accessibility of unit.
8. Leaks due to improper installation of system, for example: hose clamps, fittings, flare nuts, quick disconnects.
9. Freight Damage.
10. Pumps that have been run dry, are water damaged or have blown freeze plugs.
11. Pumps with cracked heads.
12. Pump seals are not covered.
13. UV light bulbs are not covered.
14. Sea strainer elements are not covered.
15. Cartridge filter elements are not covered.
16. Sand & gravel in a multi-media filter are not covered.
17. Pump packing assemblies are not covered.
18. Pump valve assemblies are not covered.
19. Pump crankcase oil is not covered.
20. Gauge instrument calibration is not covered.
21. Fuses are not covered.
22. Valve seals and packings are not covered.
23. Exterior corrosion is not covered.
24. Membrane elements are not covered.

25 Logic boards with water damage.

26. Logic boards with blown MOV's (Power Surge)
27. Mis-programmed displays.
28. Displays or remotes with water damage.
29. Failures due to improper winterization.
30. Unit damage as a result of improper return packaging.
31. Travel costs are included in the hourly labor allowances and should not be billed as a separate item without preapproval from the factory.

<u>Installation and application of Dometic components are not warranted by Dometic, because Dometic has no control or authority over the selection, location, application, or installation of these components.</u>

OWNER’S LIMITED WARRANTY

SECTION III

COVERAGE PERIOD

What is the period of coverage?

SEE TABLE OF LIMITED WARRANTY PERIODS BELOW.

How does one determine when the Limited Warranty Period begins? All Dometic products bear a data plate on which there are model and serial numbers. The date of manufacture of the product can be determined by Dometic based on the serial number on the product. To determine whether or not any Dometic component is in warranty, proceed as follows:

1. Determine the model and serial number on the data plate located on the product. Write or call the Dometic Customer Service Department to obtain the manufacture date of the product. The hours of the Customer Service Department are 8:00 a.m. - 5:00 p.m. (USA, Eastern Standard Time Zone) Monday through Friday excluding holidays.

2. It is possible that a considerable time lag exists between the date a product or component is manufactured and the date it is put in service. In such instances, the date of manufacture could indicate that the item is out of warranty. However, based on the date the equipment is first put in service, the item may still be covered by the Dometic Limited Warranty. For proof of date put in service, Dometic will require a copy of the bill of sale of the Dometic equipment from the installer or new boat dealer to the original owner.

OWNER'S LIMITED WARRANTY

SECTION IV

GETTING COVERED WARRANTY SERVICE

How does the purchaser/owner get warranty service?

Please read the following Warranty Procedure: If the failure of a Dometic component is determined to be covered under the Dometic warranty and the time in service is determined to be within the warranty time limit, the owner has the following three options:

1. Preferred option: Have a Dometic authorized Servicing Dealer, perform the work needed. The customer needs to call Dometic Customer Service Department for a recommendation as to the closest dealer. If the customer already knows an authorized servicing dealer, the dealer should be contacted directly.

2. Second option: If the customer contacts Dometic Service Department for a Servicing Dealer and Dometic has no one in that particular area, Dometic will authorize the use of a local service company and Dometic will work with the local company to assist in any way possible.

The customer may contact the Dometic Service Department at 1(800) 542-2477, Monday through Friday, 8:00am - 5:00pm.

TABLE OF LIMITED WARRANTY PERIODS

Important Notes Regarding Product Start-up/ Commissioning:

1. Warranty periods begin from the date of possession of the boat/vessel by the first owner if OEM installed or date of installation if dealer installed, but not to exceed three (3) years from date of production of the product. However, if the product is started for any reason by the OEM or dealer, notwithstanding any provision to the contrary, the warranty period will be for a period of one (1) year commencing from the date that the product was started by the OEM or dealer. The warranty is transferable and will carry the remainder of the original owner's warranty based on the original date of purchase or date of installation.

2. Proof of purchase or installation may be required to verify warranty coverage.

3. Any unit or replacement part installed due to a warranty failure carries the remainder of the original warranty. Warranty coverage does not start over from the repair/replacement date.

4. Warranty coverage shall not exceed three (3) years from the date of production of the product.

5. These warranty periods are effective February 1, 2014.

WATER PURIFICATION PRODUCTS:

PRODUCT SALE TYPE WARRANTY COVERAGE

Spot Zero OEM 1-year warranty, parts and labor, from date of delivery of vessel. Not to exceed 3 years from date of production of product, and subject to **Important Notes above**. Pump warranty, see Pump section.

Dealer Installed 1-year warranty, parts and labor, from date of installation. Not to exceed 3 years from date of production of product, and subject to **Important Notes above**. Pump warranty, see Pump section.

Sea Xchange OEM 1-year warranty, parts and labor, Not to exceed 3 years from date of production of product, and subject to **Important Notes above**. Pump warranty, see Pump section.

Dealer Installed 1-year warranty, parts and labor, from date of installation. Not to exceed 3 years from date of production of product, and subject to **Important Notes above**. Pump warranty, see Pump section.

(SE SERIES, SX SERIES FROM DATE OF DELIVERY OF VESSEL. XTC SERIES, CX SERIES)

PUMPS, ACCESSORIES, REPLACEMENT PARTS:

PRODUCT SALE TYPE WARRANTY COVERAGE

Pumps OEM or Dealer Installed 1 year warranty, parts and labor. Wearable parts such as pump seals, brushes and plastic valves are not covered under warranty.

Dealer Installed and 1 year warranty, parts only. Wearable parts such as pump seals, brushes and plastic valves are not covered under warranty.

Accessories OEM, Dealer Installed, 1 year warranty, parts only.

Replacement Parts Aftermarket sales. 90-Day warranty, parts only.

This Page Intentionally Left Blank