User's Manual

SE MODELS

SEA XCHANGE

SE-350 SE-600-1 SE-600-2 SE-800

2786 SW 3RD AVE
FORT LAUDERDALE, FL
Phone 954-533-5640
Email: info@spotzerowater.com
www.spotzerowater.com

TABLE OF CONTENTS

1. INTRODUCTION 4

Acronyms and Definitions 5
Congratulations 6
Safety 6
Principles of Reverse Osmosis 7
Unit Specifications 8
Operating Specifications 9

2. INSTALLATION AND COMMISSIONING 14

Installation Kit 15
Dimensions 16
Mounting 19
Electrical Requirements 20
Plumbing and Piping Connections 21
System Layout and Schematics 24
Complete Install Guide 26
New System Startup 32
Sea Xchange Commissioning Report Form 34

3. OPERATION AND MAINTENANCE 36

Controller Overview 37
Normal Operation 38
Fresh Water Flush 42
Storage or Winterization of Unit 43
Membrane Removal and Replacement 44
High Pressure Pump Oil Change 47

4. TROUBLESHOOTING 50

Reverse Osmosis Troubleshooting 51
Abnormal Product Flow 52
Pressure switch Adjustment 53
Diversion Valve (By-Pass) 55

5. PARTS 56

SE Series Parts List 57
SE Drawings 62

6. MANUFACTURER'S INDEX 74

Watermaker System Controller 76
General High Pressure Pump 88
Price® Booster Pump 94
Dow Filmtec™ Membranes 110
Burkert Diversion Valve 114

7. WARRANTY INFORMATION 120

Owner's Limited Warranty 121

This Page Intentionally Left Blank

PART 1: INTRODUCTION

ACRONYMS AND DEFINITIONS

ACRONYM/SYMBOL	DEFINITION
FWF	FRESH WATER FLUSH
RO	REVERSE OSMOSIS
PSI	POUNDS PER SQUARE INCH
GPM	GALLONS PER MINUTE
GPD	GALLONS PER DAY
TDS	TOTAL DISSOLVED SOLIDS
PPM	PARTS PER MILLION
TCF	TEMPERATURE CORRECTION FACTOR
LP SWITCH	LOW PRESSURE SWITCH
HP SWITCH	HIGH PRESSURE SWITCH
Φ	PHASE

CONGRATULATIONS

Your Dometic SeaXchange SE-Series Reverse Osmosis System is a durable piece of equipment that, with proper care, will last for many years. This User's Manual outlines installation, operation, maintenance, and troubleshooting details vital to the sustained performance of your system.

SAFETY

The safety section of this User's Manual outlines the various safety headings used throughout this manual's text and are enhanced and defined below:

NOTE: INDICATES STATEMENTS THAT PROVIDE FURTHER INFORMATION AND CLARIFICATION.

NOTE: PRIOR TO OPERATING OR SERVICING YOUR REVERSE OSMOSIS SYSTEM, THIS USER'S MANUAL MUST BE READ AND FULLY UNDERSTOOD. KEEP THIS AND OTHER ASSOCIATED INFORMATION FOR FUTURE REFERENCE AND FOR NEW OPERATORS OR QUALIFIED PERSONNEL NEAR THE SYSTEM.

CAUTION: INDICATES STATEMENTS THAT ARE USED TO IDENTIFY CONDITIONS OR PRACTICES THAT COULD RESULT IN EQUIPMENT OR OTHER PROPERTY DAMAGE.

DO NOT UNDER ANY CIRCUMSTANCE; REMOVE ANY CAUTION, WARNING, OR OTHER DESCRIPTIVE LABELS FROM THE SYSTEM.

WARNING: INDICATES STATEMENTS THAT ARE USED TO IDENTIFY CONDITIONS OR PRACTICES THAT COULD RESULT IN INJURY OR LOSS OF LIFE. FAILURE TO FOLLOW WARNINGS COULD RESULT IN SERIOUS INJURY OR EVEN DEATH.

PRINCIPLES OF REVERSE OSMOSIS

REVERSE OSMOSIS

How Fresh Water Is Produced

Reverse Osmosis or "RO" is a process where freshwater water is produced by pumping saltwater through a semi-permeable membrane.

Osmosis

Osmosis is a naturally occurring process where a weak solution will cross a semi-permeable membrane to mix with a highly concentrated solution. For example a freshwater solution will naturally want to mix with a saltwater solution.

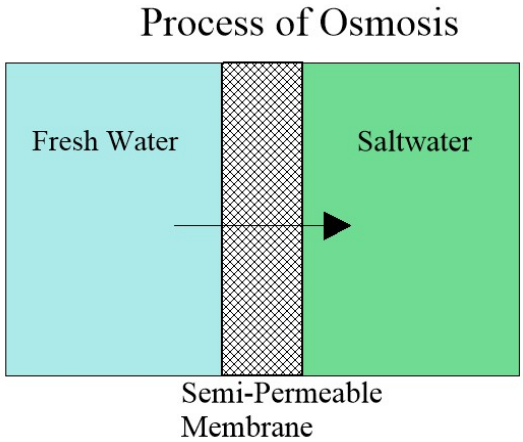

Reverse Osmosis

To reverse this process work is put into the system using a pump. The pump causes pressure to build up on the saltwater side of the membrane. This pressure forces water across the semi-permeable membrane. The membrane is designed to allow the water molecules to pass while preventing the salt and other solids from doing so. Fresh water is collected on the other side of the membrane as a result.

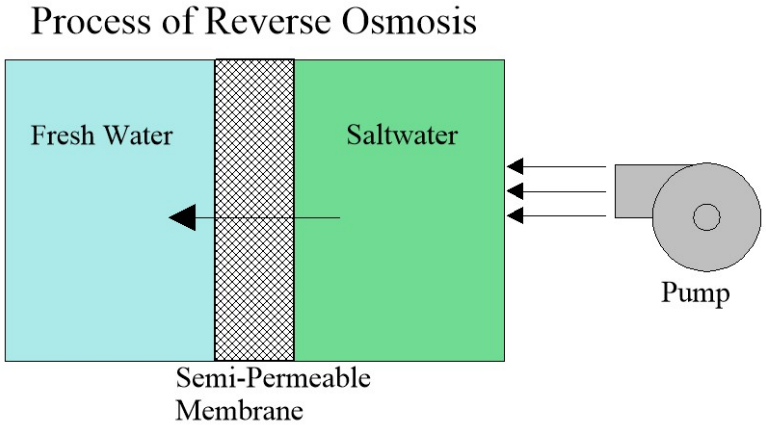

UNIT SPECIFICATIONS

SE MODEL	350	600-1	600-2	800
Configuration	1 Vessel	1 Vessel	2 Vessel	2 Vessel
Feed Water Source	Sea Water	Sea Water	Sea Water	Sea Water
Rated production gpd (gpm)	350(0.24)	600(0.41)	600(0.41)	800(0.55)
Rejection and Flow Rates				
Nominal Salt Rejection %	99.4%	99.4%	99.4%	99.4%
Minimum Feed Flow gpm (lpm)	2.5 (9.5)	2.5 (9.5)	2.5 (9.5)	2.5 (9.5)
Minimum Concentrate Flow gpm (lpm)	2.26 (8.3)	2.1 (7.9)	2.1 (7.9)	1.94 (7.3)
Connections				
Feed inch	¾” Hose	¾” Hose	¾” Hose	¾” Hose
Product inch	3/8” QC 9.5mm	3/8” QC 9.5mm	3/8” QC 9.5mm	3/8” QC 9.5mm
Concentrate inch	1/2” QC 12.7mm	1/2” QC 12.7mm	1/2” QC 12.7mm	1/2” QC 12.7mm
Membranes				
Membrane Per Vessel	1	1	1	1
Membrane Quantity	1	1	2	2
Membrane Size	2521	2540	2521	2540
Pumps				
High Pressure Pump Type	Piston	Piston	Piston	Piston
HP motor amps	14.0/7.0	14.0/7.0	14.0/7.0	14.0/7.0
High Pressure Motor HP (kw)	1.5	1.5	1.5	1.5
Booster motor amps	7.2/4.3	7.2/4.3	7.2/4.3	7.2/4.3
Booster Pump RPM @ 60	1750	1750	1750	1750
Electrical				
Voltage	115/230V 60Hz 1Φ	115/230V 60Hz 1Φ	115/230V 60Hz 1Φ	115/230V 60Hz 1Φ
Amp Draw	21.2/11.3	21.2/11.3	21.2/11.3	21.2/11.3
System Dimensions				
L x W x H inch (cm)	25.75”x16.99”x 14.09” (65.4x43.2x35.8)	25.75”x16.99”x 14.09” (65.4x43.2x35.8)	44.85”x16.99”x 14.09” (113.9x43.2x35.8)	44.85”x16.99”x 14.09” (113.9x43.2x35.8)
Weight lb. (kg)	117.5 (53.3)	120.5 (54.65)	125 (56.7)	131 (59.4)

OPERATION SPECIFICATIONS

BEFORE STARTING

The reverse osmosis process causes the concentration of impurities. The impurities may precipitate (fall out of solution) when their concentration reaches saturation levels when operated beyond rated production. This precipitation can scale or foul the membranes. In order to prevent this, your SE unit should never be operated over the **rated production** listed in the **UNIT SPECIFICATIONS** chart (page 8) and also should not be run above **850psi pump pressure**. Water temperature and inlet water ppm are variables that affect flow rate and pump pressure

CAUTION: THE RATED PRODUCTION WILL HAVE TO BE CORRECTED FOR TEMPERATURE OF THE SEA WATER WHEN DETERMINING RATED FLOW FOR YOUR UNIT. SEE 'TEMPERATURE CORRECTION FACTORS FOR WATER PRODUCTION' CHART (PAGE 12-13) FOR AN EXAMPLE ON CORRECTING THE RATED FLOW RATE.

PRE-FILTRATION

SE-Series systems are supplied with a 25-micron (part number 252404292) and 5-micron (part number 252404291) HIGH CAPACITY sediment filters. These filters are made from Typar™ filter media and contain 30% more media than most 2.5" x 10" pleated sediment cartridges To prevent damage to the system, we recommend using the sediment filters supplied with this system. Change the pre-filters once the pressure gauge labeled **FILTER OUT** is 15psi or lower.

BOOSTER PUMP

SE-series systems are supplied with a stainless steel centrifugal pump. The pump must be located below the water line to maintain a positive suction head for priming purposes. Refer to page 94 for the booster pump manual.

THE BOOSTER PUMP MUST NEVER BE RUN DRY. OPERATING THE PUMP WITHOUT SUFFICIENT FEED WATER WILL DAMAGE THE PUMP.

OPERATION SPECIFICATIONS

HIGH PRESSURE PUMP

The pump used on the SE-Series systems is a piston type constructed of stainless steel. Follow these guidelines to ensure proper operation of the pump:

- Refer to the WM series General Pump in manufacturer's index for recommended maintenance (page 88).
- The pump must **NEVER** be run dry. Operating the pump without sufficient feed water will damage the pump.
- **ALWAYS** use the required filters when operating the unit. The high pressure pump is susceptible to damage from sediment and debris.
- If any damage occurs to your system's pump, a re-build kit is available. Contact your local dealer or distributor and inform them of your system's model and pump size.
- Follow the instructions in the FWF section on page 42.

MEMBRANES

SE-Series reverse osmosis systems come pre-loaded with DOW FILMTEC™ sea water membranes unless otherwise specified. For the best longevity of membranes, use the manufacturer's recommended prefilters, operate it within it limits, and ensure the system is performing its regular FWF. Membrane element guidelines can be found in the Dow FILMTEC™ on page 110.

DIVERSION VALVE

The diversion valve controls the product water after the membranes. If the controller determines that the salinity of the water is acceptable, (based on the salinity set point) it will energize the diversion valve solenoid, causing the water to flow to the vessels tank. If the electrical portion of the solenoid fails or the controller fails to energize the solenoid, a manual bypass on the diversion valve may be utilized if the product water is found to be acceptable. Refer to picture on page 55 and the Diversion Valve Manual on page 114.

SYSTEM CONTROLLER

The controller is a logic based pc board that can analyze and control the electrical components within the system. Its primary functions are to monitor safety switches (high and low pressure), perform the program sequence of operations to optimize the start, normal operation, and shutdown sequence. Refer to the Watermaker System Controller Manual on page 76.

OPERATION SPECIFICATIONS

PRODUCT WATER

Dometic SeaXchange SE-Series Reverse Osmosis Systems are designed to produce product water at the capacities indicated. For example, the SE 800 produces 800 gallons per day or 0.55 gallons per minute (800gpd ÷ 24hrs/day ÷ 60mins/hr=0.55gpm) of product water at the listed operating test conditions.

Rejection
The amount of total dissolved solids (TDS) rejected by the membrane is expressed as a percentage. For example, a 99.4% rejection rate means that 99.4% of total dissolved solids do not pass through the membrane. To calculate the % rejection, use the following formula:

% Rejection = [(Feed TDS – Product TDS) / Feed TDS] x 100

Example:

99.4% = [(35,000-210)/35,000] x 100

Recovery
The amounts of product water recovered for use is expressed as a percentage. To calculate % recovery, use the following formula:

% Recovery = (Product Water Flow Rate / Feed Water Flow Rate) x 100

Example:

36% = (1.52/4.22) x 100

NOTE: ALL TDS FIGURES MUST BE EXPRESSED IN THE SAME UNITS, TYPICALLY PARTS PER MILLION (PPM) OR MILLIGRAMS PER LITER (MG/L).

OPERATION SPECIFICATIONS

TEMPERATURE CORRECTION FACTORS FOR WATER PRODUCTION

To find your SE-series unit's rated flow at a given temperature, refer to the chart to find the **T**emperature **C**orrection **F**actor (TCF). Divide the rated product flow at 77°F by the TCF. The result is the corrected product flow at current water inlet temperature. The water temperature can be found on the main screen. See the example on the next page.

Temperature °F (°C)	Temperature Correction Factor	Temperature °F (°C)	Temperature Correction Factor	Temperature °F (°C)	Temperature Correction Factor	Temperature °F (°C)	Temperature Correction Factor	Temperature °F (°C)	Temperature Correction Factor
50.0 (10.0)	1.711	57.2 (14.0)	1.475	64.4 (18.0)	1.276	71.6 (22.0)	1.109	78.8 (26.0)	0.971
50.2 (10.1)	1.705	57.4 (14.1)	1.469	64.6 (18.1)	1.272	71.8 (22.1)	1.105	79.0 (26.1)	0.968
50.4 (10.2)	1.698	57.6 (14.2)	1.464	64.8 (18.2)	1.267	72.0 (22.2)	1.101	79.2 (26.2)	0.965
50.5 (10.3)	1.692	57.7 (14.3)	1.459	64.9 (18.3)	1.262	72.1 (22.3)	1.097	79.3 (26.3)	0.962
50.7 (10.4)	1.686	57.9 (14.4)	1.453	65.1 (18.4)	1.258	72.3 (22.4)	1.093	79.5 (26.4)	0.959
50.9 (10.5)	1.679	58.1 (14.5)	1.448	65.3 (18.5)	1.254	72.5 (22.5)	1.090	79.7 (26.5)	0.957
51.1 (10.6)	1.673	58.3 (14.6)	1.443	65.5 (18.6)	1.249	72.7 (22.6)	1.086	79.9 (26.6)	0.954
51.3 (10.7)	1.667	58.5 (14.7)	1.437	65.7 (18.7)	1.245	72.9 (22.7)	1.082	80.1 (26.7)	0.951
51.4 (10.8)	1.660	58.6 (14.8)	1.432	65.8 (18.8)	1.240	73.0 (22.8)	1.078	80.2 (26.8)	0.948
51.6 (10.9)	1.654	58.8 (14.9)	1.427	66.0 (18.9)	1.236	73.2 (22.9)	1.075	80.4 (26.9)	0.945
51.8 (11.0)	1.648	59.0 (15.0)	1.422	66.2 (19.0)	1.232	73.4 (23.0)	1.071	80.6 (27.0)	0.943
52.0 (11.1)	1.642	59.2 (15.1)	1.417	66.4 (19.1)	1.227	73.6 (23.1)	1.067	80.8 (27.1)	0.940
52.2 (11.2)	1.636	59.4 (15.2)	1.411	66.6 (19.2)	1.223	73.8 (23.2)	1.064	81.0 (27.2)	0.937
52.3 (11.3)	1.630	59.5 (15.3)	1.406	66.7 (19.3)	1.219	73.9 (23.3)	1.060	81.1 (27.3)	0.934
52.5 (11.4)	1.624	59.7 (15.4)	1.401	66.9 (19.4)	1.214	74.1 (23.4)	1.056	81.3 (27.4)	0.932
52.7 (11.5)	1.618	59.9 (15.5)	1.396	67.1 (19.5)	1.210	74.3 (23.5)	1.053	81.5 (27.5)	0.929
52.9 (11.6)	1.611	60.1 (15.6)	1.391	67.3 (19.6)	1.206	74.5 (23.6)	1.049	81.7 (27.6)	0.926
53.1 (11.7)	1.605	60.3 (15.7)	1.386	67.5 (19.7)	1.201	74.7 (23.7)	1.045	81.9 (27.7)	0.924
53.2 (11.8)	1.600	60.4 (15.8)	1.381	67.6 (19.8)	1.197	74.8 (23.8)	1.042	82.0 (27.8)	0.921
53.4 (11.9)	1.594	60.6 (15.9)	1.376	67.8 (19.9)	1.193	75.0 (23.9)	1.038	82.2 (27.9)	0.918
53.6 (12.0)	1.588	60.8 (16.0)	1.371	68.0 (20.0)	1.189	75.2 (24.0)	1.035	82.4 (28.0)	0.915
53.8 (12.1)	1.582	61.0 (16.1)	1.366	68.2 (20.1)	1.185	75.4 (24.1)	1.031	82.6 (28.1)	0.913
54.0 (12.2)	1.576	61.2 (16.2)	1.361	68.4 (20.2)	1.180	75.6 (24.2)	1.028	82.8 (28.2)	0.910
54.1 (12.3)	1.570	61.3 (16.3)	1.356	68.5 (20.3)	1.176	75.7 (24.3)	1.024	82.9 (28.3)	0.908
54.3 (12.4)	1.564	61.5 (16.4)	1.351	68.7 (20.4)	1.172	75.9 (24.4)	1.021	83.1 (28.4)	0.905
54.5 (12.5)	1.558	61.7 (16.5)	1.347	68.9 (20.5)	1.168	76.1 (24.5)	1.017	83.3 (28.5)	0.902
54.7 (12.6)	1.553	61.9 (16.6)	1.342	69.1 (20.6)	1.164	76.3 (24.6)	1.014	83.5 (28.6)	0.900
54.9 (12.7)	1.547	62.1 (16.7)	1.337	69.3 (20.7)	1.160	76.5 (24.7)	1.010	83.7 (28.7)	0.897
55.0 (12.8)	1.541	62.2 (16.8)	1.332	69.4 (20.8)	1.156	76.6 (24.8)	1.007	83.8 (28.8)	0.894
55.2 (12.9)	1.536	62.4 (16.9)	1.327	69.6 (20.9)	1.152	76.8 (24.9)	1.003	84.0 (28.9)	0.892
55.4 (13.0)	1.530	62.6 (17.0)	1.323	69.8 (21.0)	1.148	77.0 (25.0)	1.000	84.2 (29.0)	0.889
55.6 (13.1)	1.524	62.8 (17.1)	1.318	70.0 (21.1)	1.144	77.2 (25.1)	0.997	84.4 (29.1)	0.887
55.8 (13.2)	1.519	63.0 (17.2)	1.313	70.2 (21.2)	1.140	77.4 (25.2)	0.994	84.6 (29.2)	0.884
55.9 (13.3)	1.513	63.1 (17.3)	1.308	70.3 (21.3)	1.136	77.5 (25.3)	0.991	84.7 (29.3)	0.882
56.1 (13.4)	1.508	63.3 (17.4)	1.304	70.5 (21.4)	1.132	77.7 (25.4)	0.988	84.9 (29.4)	0.879
56.3 (13.5)	1.502	63.5 (17.5)	1.299	70.7 (21.5)	1.128	77.9 (25.5)	0.985	85.1 (29.5)	0.877
56.5 (13.6)	1.496	63.7 (17.6)	1.294	70.9 (21.6)	1.124	78.1 (25.6)	0.982	85.3 (29.6)	0.874
56.7 (13.7)	1.491	63.9 (17.7)	1.290	71.1 (21.7)	1.120	78.3 (25.7)	0.979	85.5 (29.7)	0.871
56.8 (13.8)	1.486	64.0 (17.8)	1.285	71.2 (21.8)	1.116	78.4 (25.8)	0.977	85.6 (29.8)	0.869
57.0 (13.9)	1.480	64.2 (17.9)	1.281	71.4 (21.9)	1.112	78.6 (25.9)	0.974	85.8 (29.9)	0.866

OPERATION SPECIFICATIONS

TEMPERATURE CORRECTION FACTORS FOR MEMBRANE (FORMULA)

If a system is rated to produce 1.25 gpm of product water @ 77˚ F. The same system will produce more water at a higher temperature. It will also produce less water at a lower temperature. Use the temperature correction table to obtain the correct flow.

Corrected Flow Rate = (Measured Rated Flow) ÷ (TCF @ Feed Water Temp.)

Example:

1.25 gpm @ 59˚ F (1.25÷1.42=.88 gpm)

1.25 gpm @ 77˚ F (1.25÷1=1.25 gpm)

1.25 gpm @ 84˚ F (1.25÷0.89=1.4 gpm)

NOTE: Fahrenheit/Celsius conversion: F = (°C x 9/5) + 32

PART 2: INSTALLATION AND COMMISSIONING

INSTALLATION KIT

ITEMS INCLUDED WITH EACH SYSTEM

MAIN INSTALLATION ITEMS

- ☐ 252404258 – stainless steel booster pump and motor assembly
- ☐ 252404295 - 2.5” x 10” carbon block filter
- ☐ 252404172 - 2.5”x 10” double pre-filter assembly
- ☐ 252404326 – 2.5” filter housing wrench
- ☐ 252404202 – 20’ of ¾“ white double walled hose. **(Not to be used on the suction side of feed pump. Always use wire reinforced hose from the seacock to the suction side of the feed pump.)**
- ☐ 252404004 – 50’ of ¼ ” Spot Zero white nylon tubing **(for FWF)**
- ☐ 252404003 – 50’ of ½” Spot Zero white nylon tubing **(for overboard)**
- ☐ 252404002 - 50’ of 3/8” Spot Zero white nylon tubing **(for product)**
- ☐ 252404099 – (2) 3/8” x ½” connectors
- ☐ 252404114 – (2) 3/8” tee
- ☐ 252404109 – (3) 3/8”QC x 3/8”QC 90° elbow
- ☐ 252404118 – (18) 3/8” red locking clip
- ☐ 254404094 – (3) ½” elbow tube
- ☐ 252404093 –(1) ½” connector male
- ☐ 252404115 – (2) ½” tee
- ☐ 252404115 – (10) ½” red locking clip
- ☐ (10) – Blue clamp aid safety covers
- ☐ (8) – Stainless steel 5/16” x 1” lag bolts
- ☐ (8) – Stainless steel 5/16” flat washers

CONSUMABLE ITEMS

- ☐ 252404192 – 2.5” x 10” 25 micron pre-filter
- ☐ 252404191 – 2.5” x 10”5 micron pre-filter
- ☐ 252404015 – 21oz. bottle CAT pump oil
- ☐ 252404179 – SW30 2540 membrane
- ☐ 252404178 – SW30 2521 membrane

OPTIONAL ITEMS

- ☐ 252404298 – high capacity prefilter (4.5” X 20”)
- ☐ 252404317 – high capacity prefilter assembly
- ☐ 252404225 – remote control and 50’ cable
- ☐ 252404121 – spare fitting kit
- ☐ 252404040 – hand held TDS meter
- ☐ Membrane and vessel array upgrade

NOTE: Items listed are 1 unit supplied unless noted within parentheses.

DIMENSIONS

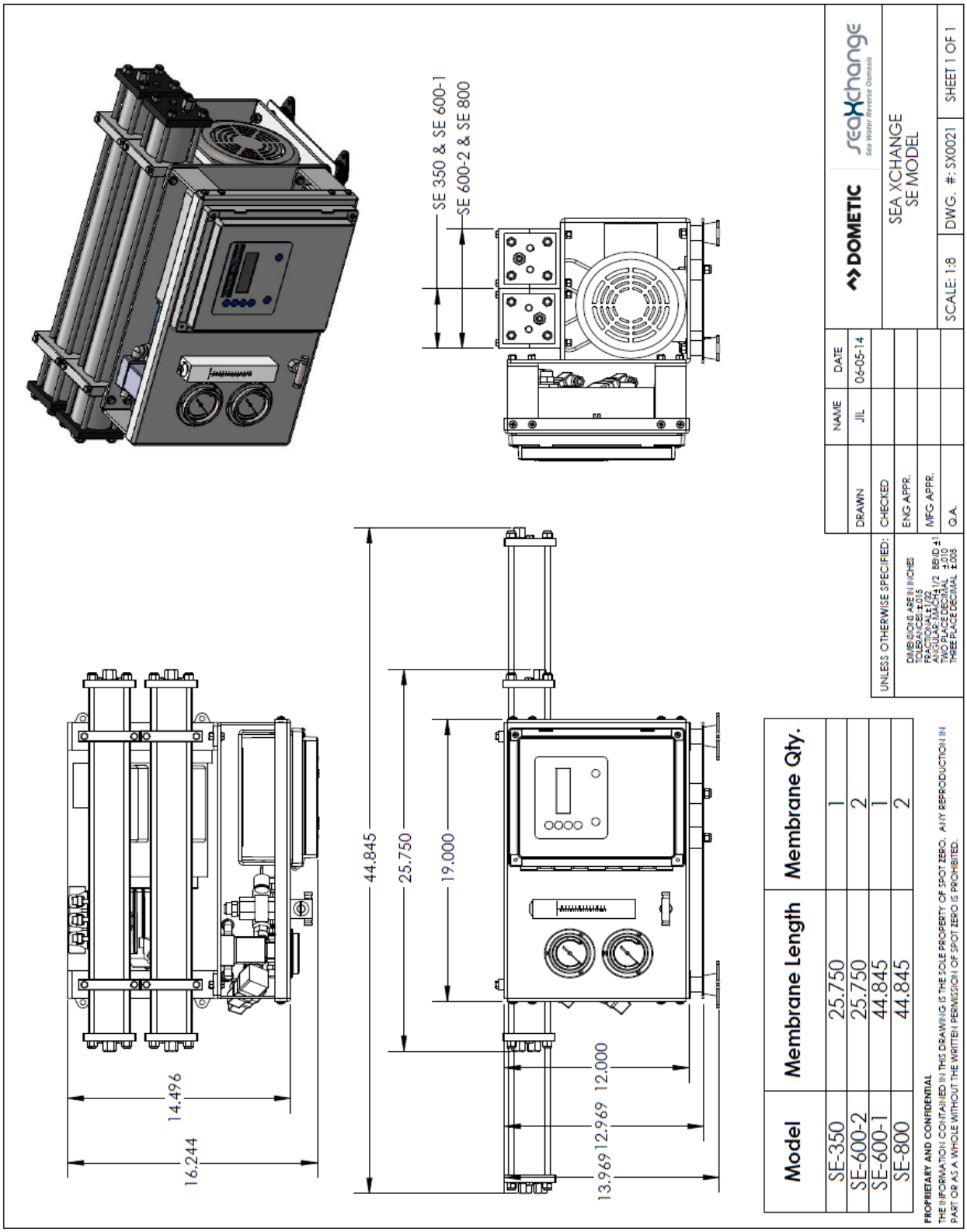
SE 350 & SE 600-1
SE 600-2 & SE 800
44.845
25.750
19.000
14.496
16.244
12.000
12.969
13.969
DOMETIC
seaXchange
Sea Water Reverse Osmosis
SEA XCHANGE
SE MODEL
SCALE: 1:8
DWG. #: SX0021
SHEET 1 OF 1
NAME
DATE
DRAWN
JIL
06-05-14
CHECKED
ENG APPR.
MFG APPR.
Q.A.
UNLESS OTHERWISE SPECIFIED:
DIMENSIONS ARE IN INCHES
TOLERANCES: ±.015
FRACTIONAL ±1/32
ANGULAR: MACH ±1/2 BEND ±1
TWO PLACE DECIMAL ±.010
THREE PLACE DECIMAL ±.005
Model
Membrane Length
Membrane Qty.
SE-350
25.750
1
SE-600-2
25.750
2
SE-600-1
44.845
1
SE-800
44.845
2
PROPRIETARY AND CONFIDENTIAL
THE INFORMATION CONTAINED IN THIS DRAWING IS THE SOLE PROPERTY OF SPOT ZERO. ANY REPRODUCTION IN PART OR AS A WHOLE WITHOUT THE WRITTEN PERMISSION OF SPOT ZERO IS PROHIBITED.

DIMENSIONS

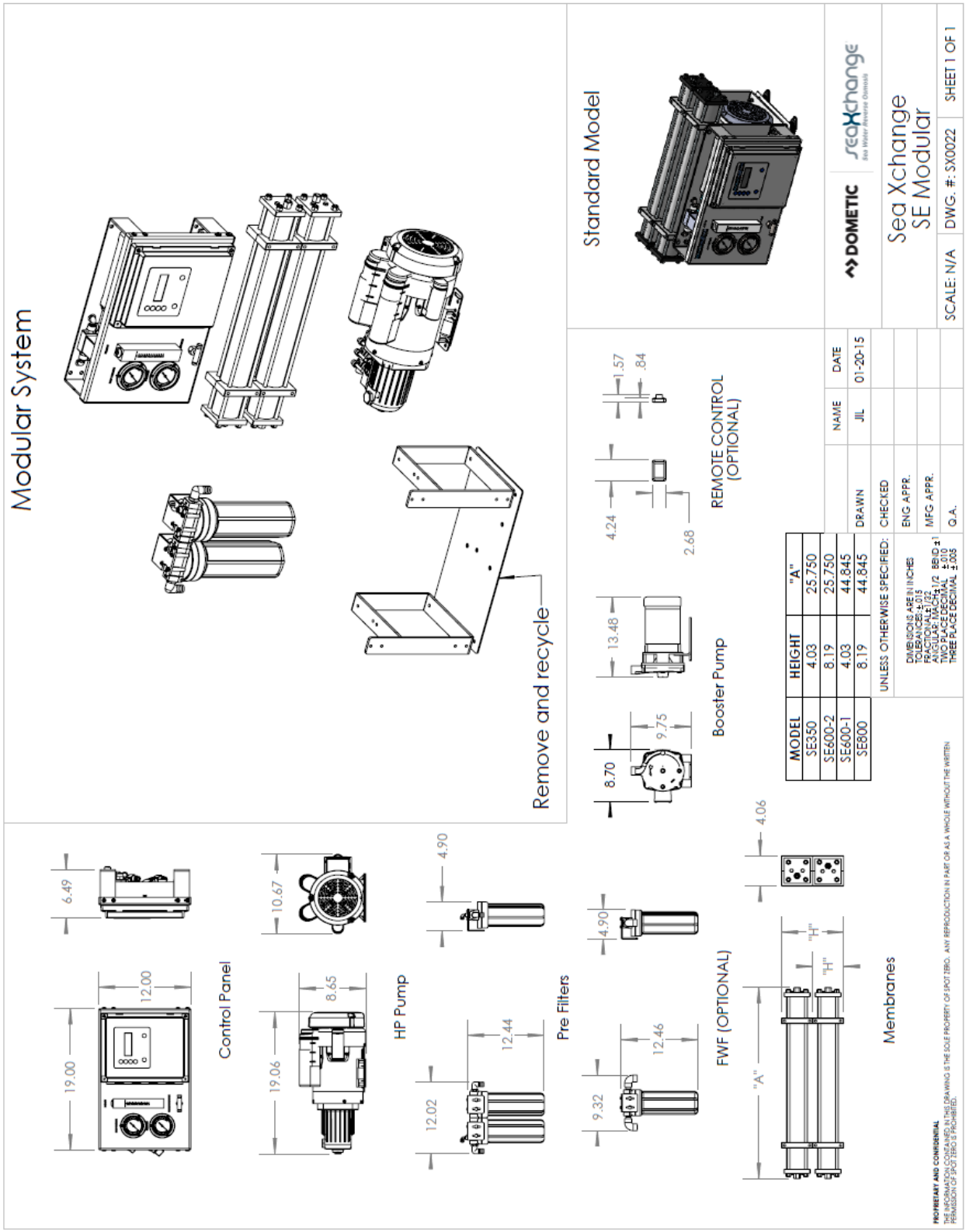

Modular System
Remove and recycle
Standard Model
Control Panel
HP Pump
Pre Filters
FWF (OPTIONAL)
Membranes
Booster Pump
REMOTE CONTROL (OPTIONAL)
19.00
12.00
6.49
19.06
8.65
10.67
12.02
12.44
4.90
9.32
12.46
4.90
"A"
"H"
"H"
4.06
8.70
9.75
13.48
4.24
2.68
1.57
.84
MODEL | HEIGHT | "A"
SE350 | 4.03 | 25.750
SE600-2 | 8.19 | 25.750
SE600-1 | 4.03 | 44.845
SE800 | 8.19 | 44.845
UNLESS OTHERWISE SPECIFIED:
DIMENSIONS ARE IN INCHES
TOLERANCES: ±.015
FRACTIONAL ±1/32
ANGULAR: MACH ±1/2 BEND ±1
TWO PLACE DECIMAL ±.010
THREE PLACE DECIMAL ±.005
NAME
DATE
DRAWN
JIL
01-20-15
CHECKED
ENG APPR.
MFG APPR.
Q.A.
DOMETIC
Sea Xchange
SE Modular
SCALE: N/A
DWG. #: SX0022
SHEET 1 OF 1
PROPRIETARY AND CONFIDENTIAL
THE INFORMATION CONTAINED IN THIS DRAWING IS THE SOLE PROPERTY OF SPOT ZERO. ANY REPRODUCTION IN PART OR AS A WHOLE WITHOUT THE WRITTEN PERMISSION OF SPOT ZERO IS PROHIBITED.

DIMENSIONS

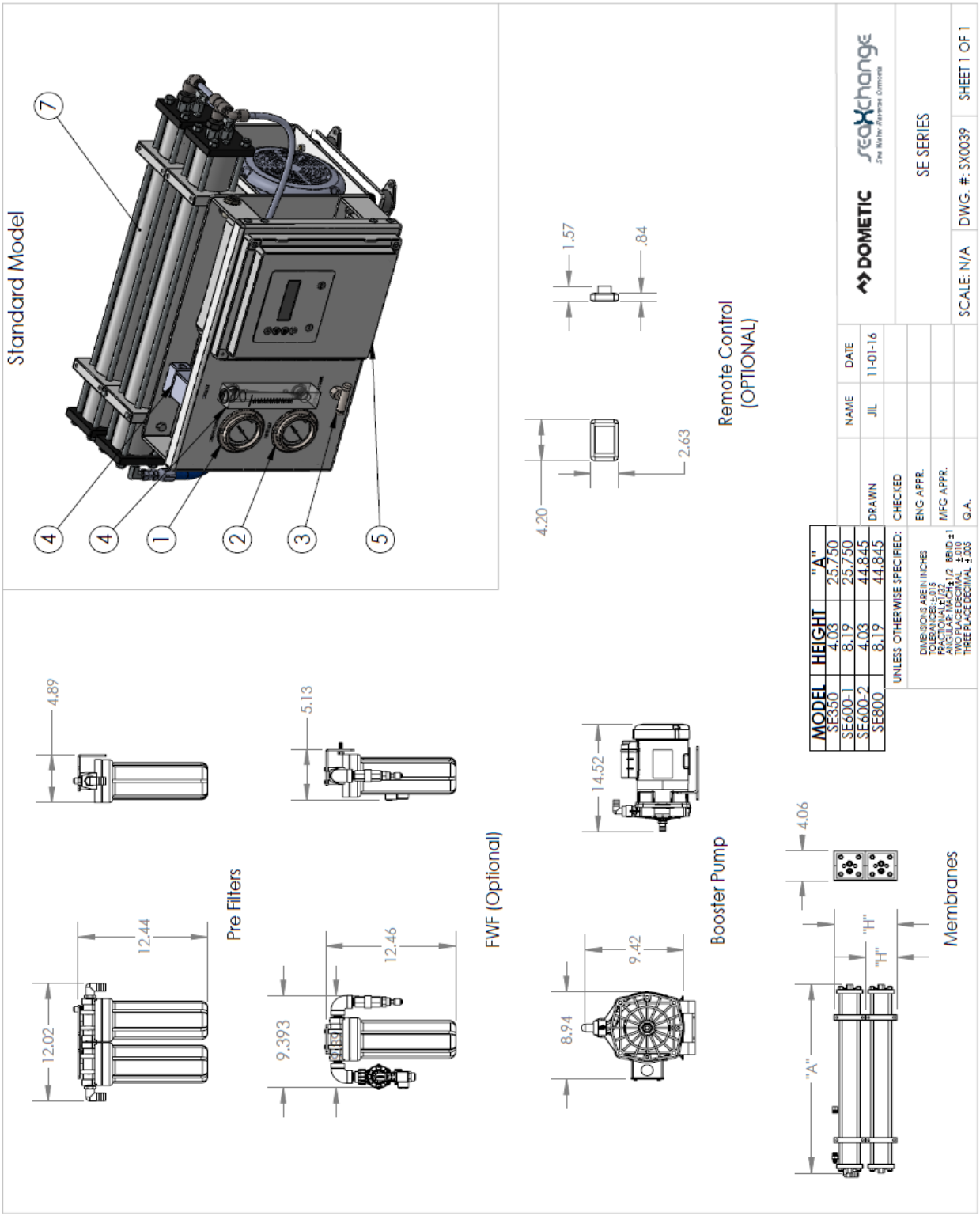
Standard Model
7
4
4
1
2
3
5
4.89
12.02
12.44
Pre Filters
5.13
9.393
12.46
FWF (Optional)
14.52
8.94
9.42
Booster Pump
4.06
"A"
"H"
"H"
Membranes
1.57
.84
4.20
2.63
Remote Control
(OPTIONAL)
MODEL HEIGHT "A"
SE350 4.03 25.750
SE600-1 8.19 25.750
SE600-2 4.03 44.845
SE800 8.19 44.845
UNLESS OTHERWISE SPECIFIED:
DIMENSIONS ARE IN INCHES
TOLERANCES:
FRACTIONAL ±1/16
ANGULAR: MACH ±1/2 BEND ±1
TWO PLACE DECIMAL ±.010
THREE PLACE DECIMAL ±.005
NAME DATE
DRAWN JIL 11-01-16
CHECKED
ENG APPR.
MFG APPR.
Q.A.
DOMETIC
seaXchange
SE SERIES
SCALE: N/A
DWG. #: SX0039
SHEET 1 OF 1

MOUNTING

The freestanding system should be bolted down and securely fastened. Refer to mounting template below.

FEET/HOLE LOCATIONS

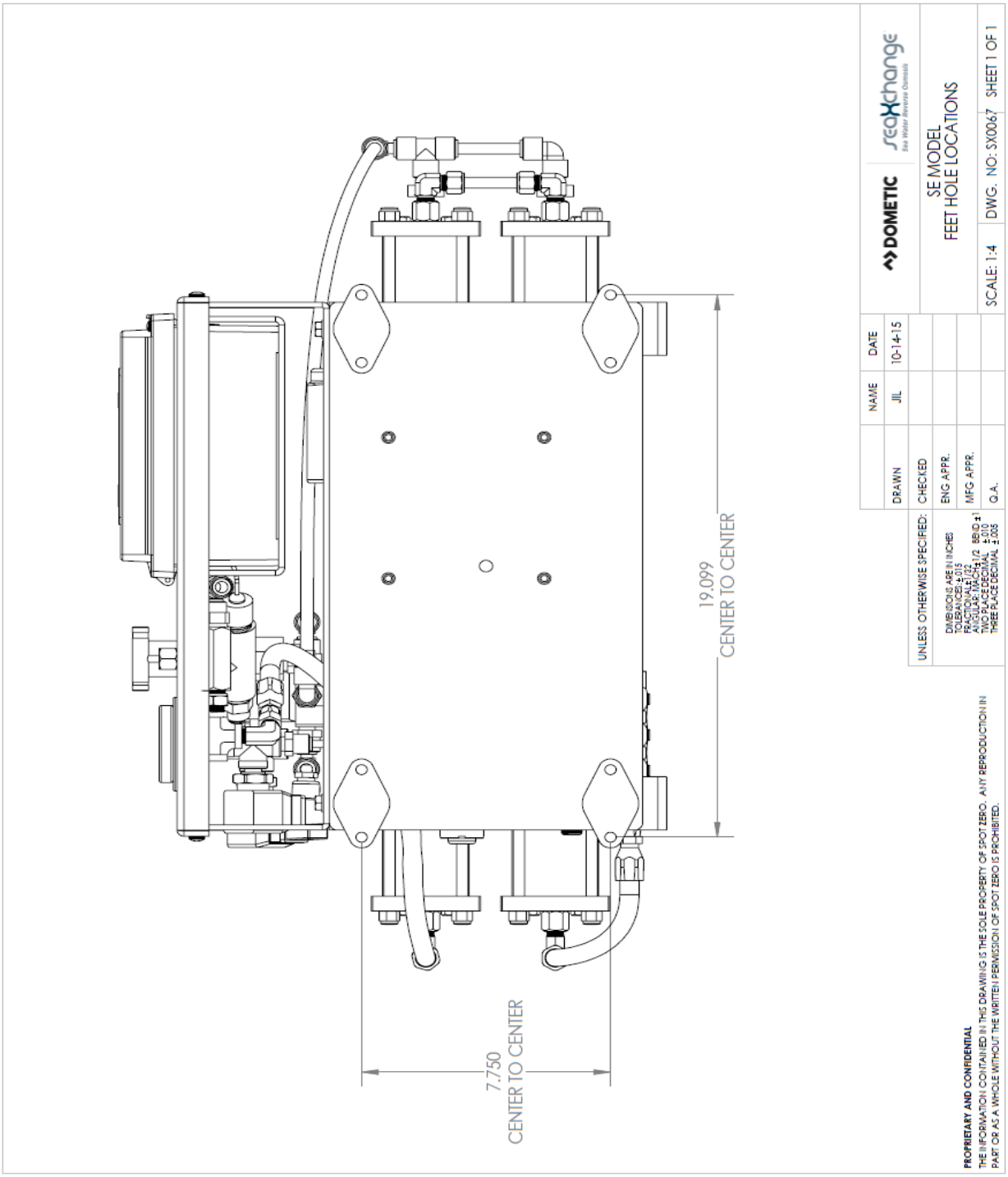

ELECTRICAL REQUIREMENTS

ELECTRICAL

The SE-Series systems are available in 1Φ (phase).

- 115 volts at 21.2 amps (including booster pump)
- 230 volts at 11.3 amps (including booster pump)
- 60 Hertz available in both the 115 volt and 230 volt units

NOTE: IT'S RECOMMENDED THAT A QUALIFIED ELECTRICIAN WIRE YOUR SYSTEM IN ACCORDANCE WITH ALL APPLICABLE CODES, RULES, AND REGULATIONS.

WARNING: TO REDUCE THE RISK OF ELECTRICAL SHOCK, THE INCOMING POWER SUPPLY MUST INCLUDE A PROTECTIVE GROUND.

PLUMBING AND PIPING CONNECTIONS

PLUMBING

The membranes and high pressure pumps used on SE-Series Reverse Osmosis Systems require a continuous flow of water with a maximum temperature not to exceed 113°F. ***Please see Complete Install Guide and the connection drawings on the following pages.***

CAUTION: ANY RESTRICTIONS OR BLOCKAGE IN THE CONCENTRATE LINE CAN CAUSE BACKPRESSURE, WHICH WILL INCREASE THE SYSTEM'S OPERATING PRESSURE. THIS CAN RESULT IN DAMAGE TO THE SYSTEM'S MEMBRANES AND COMPONENTS.

PLUMBING AND PIPING CONNECTIONS

CONNECTION DIAGRAM

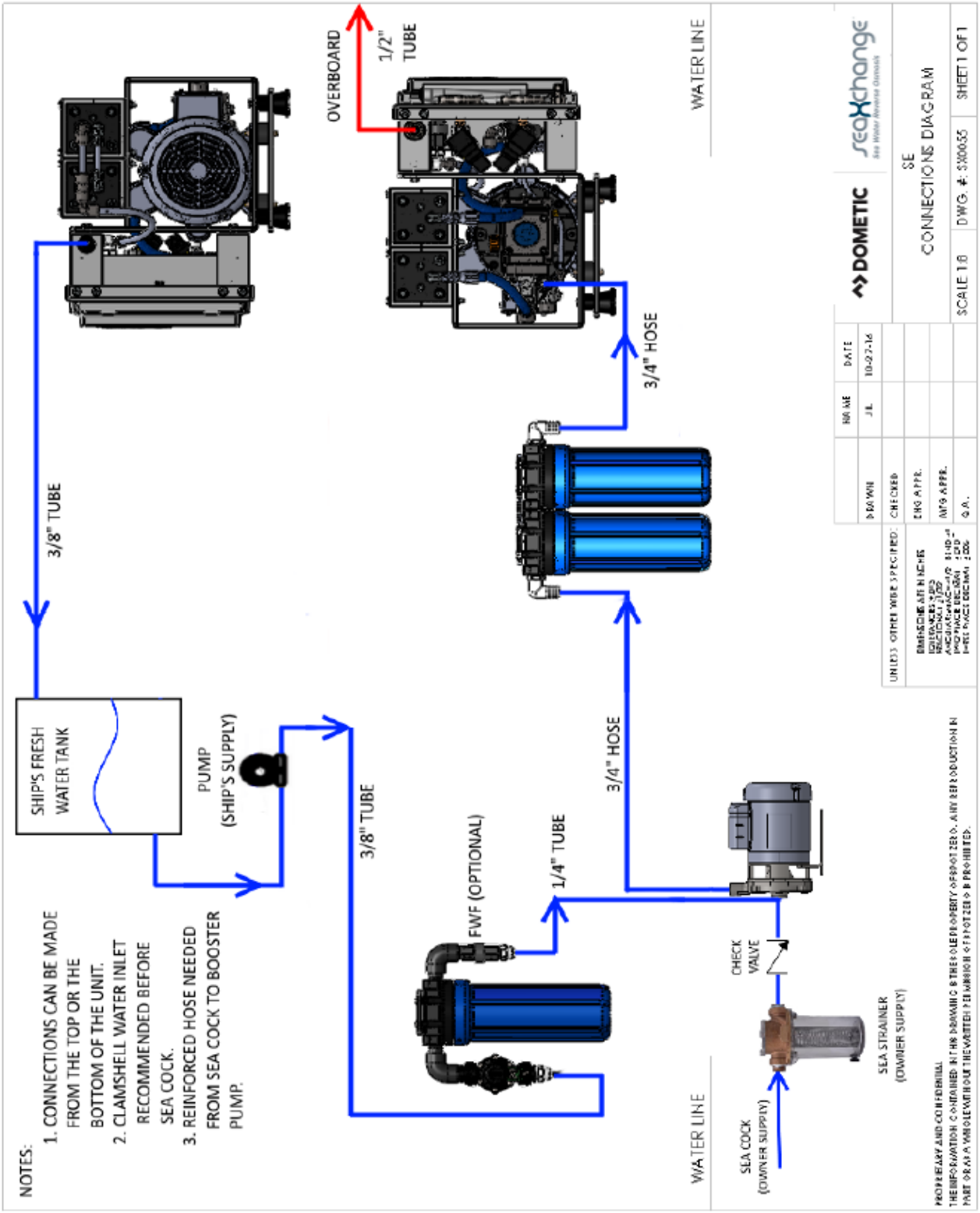

PLUMBING AND PIPING CONNECTIONS

INLETS AND OUTLETS

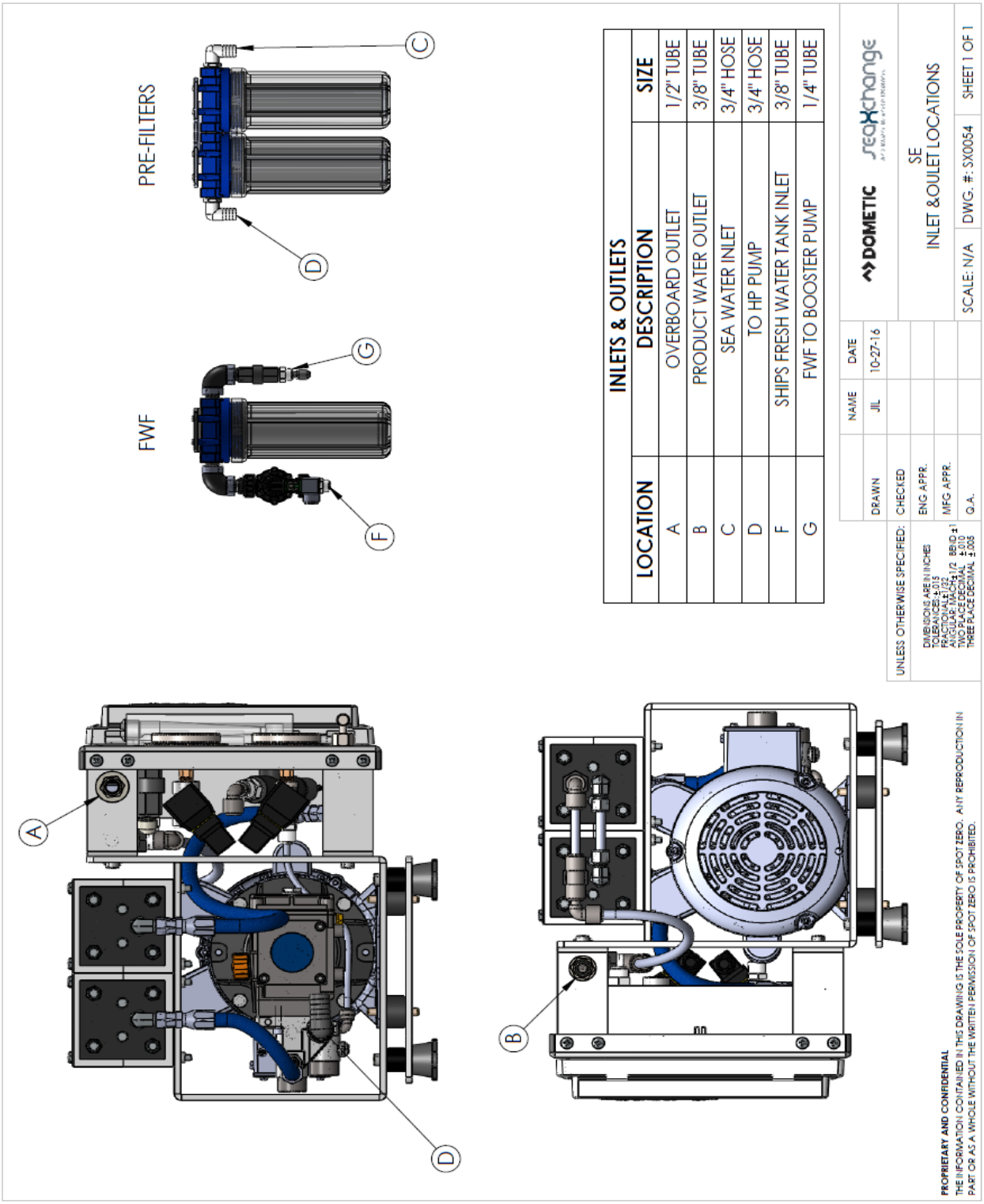

SYSTEM LAYOUT AND SCHEMATICS

SE SERIES PIPING DIAGRAM

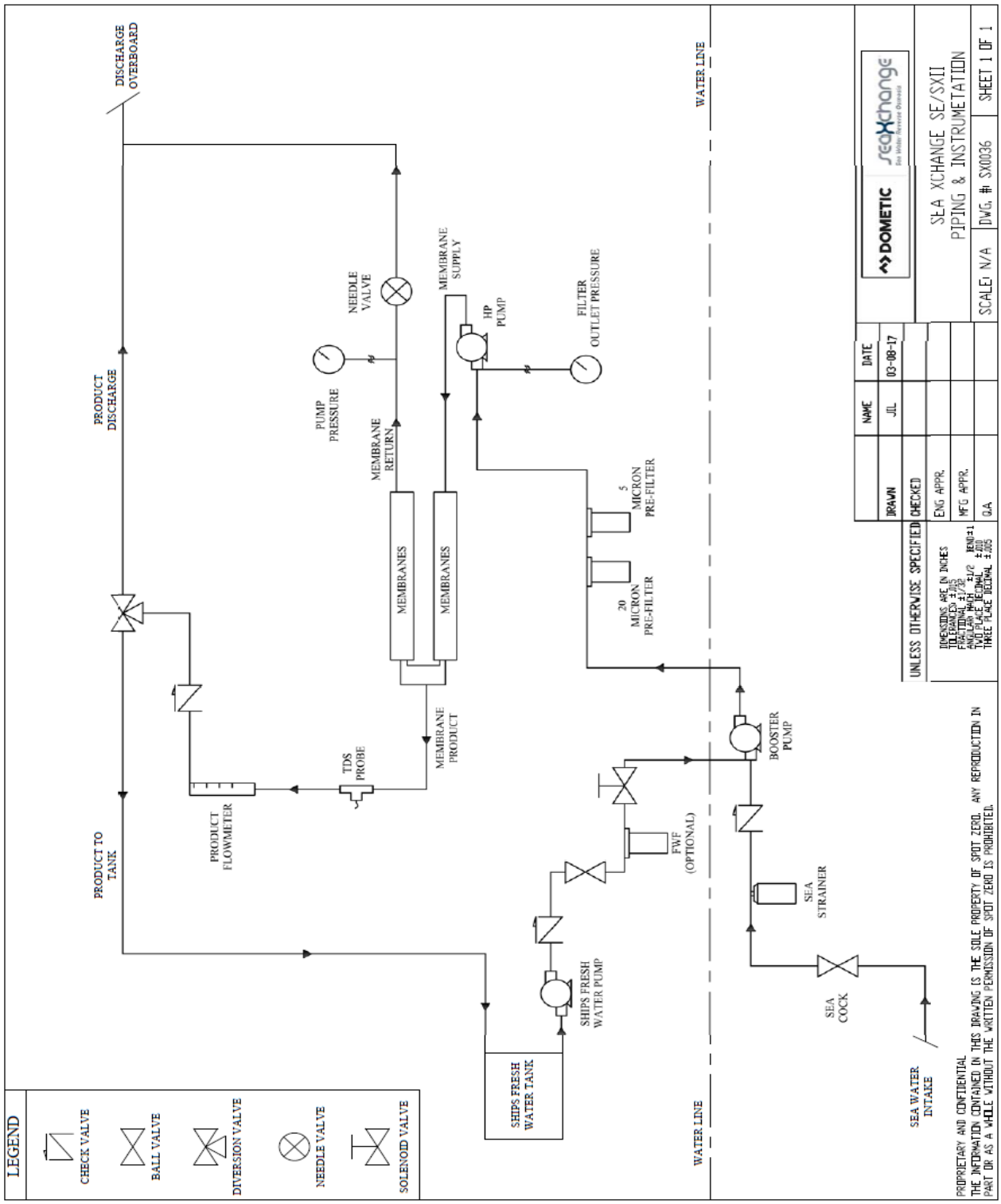

SYSTEM LAYOUT AND SCHEMATICS

SE SERIES ELECTRICAL DIAGRAM

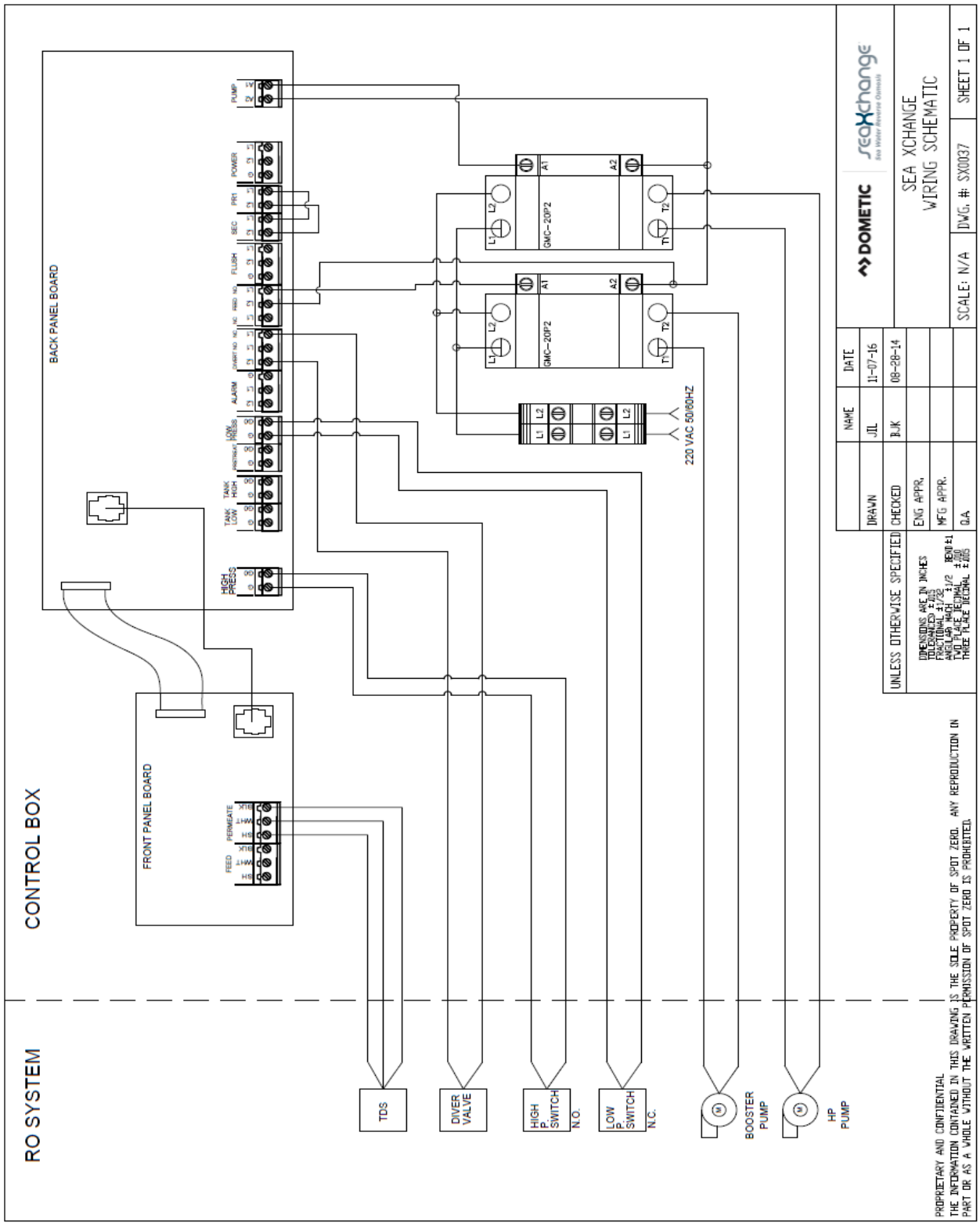

COMPLETE INSTALL GUIDE

SEA WATER PLUMBING CONNECTIONS

1. Locate a dedicated sea cock to be used for booster pump supply. Sea cock should be a minimum of 3/4” with a speed scoop to prevent a Venturi effect while vessel is underway.
2. Install a sea strainer with at least a 50 mesh rating after sea cock.
3. Install supplied booster pump below water line.

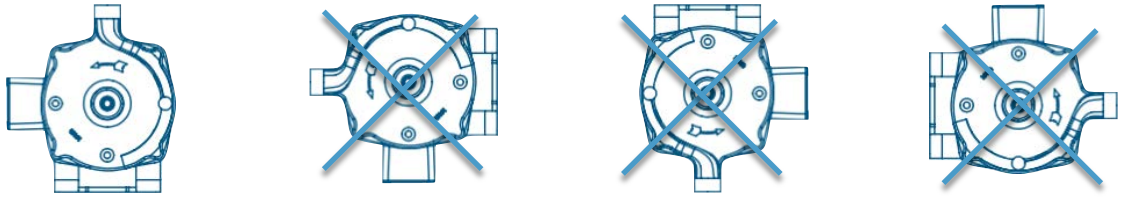

NOTE - BOOSTER PUMP OUTLET MUST REMAIN THE HIGHEST POINT OF PUMP AND CANNOT BE ROTATED 90 OR 180 DEGREES.

4. Run reinforced suction hose from sea cock to sea strainer to booster pump in an upward flow manner to prevent air traps.

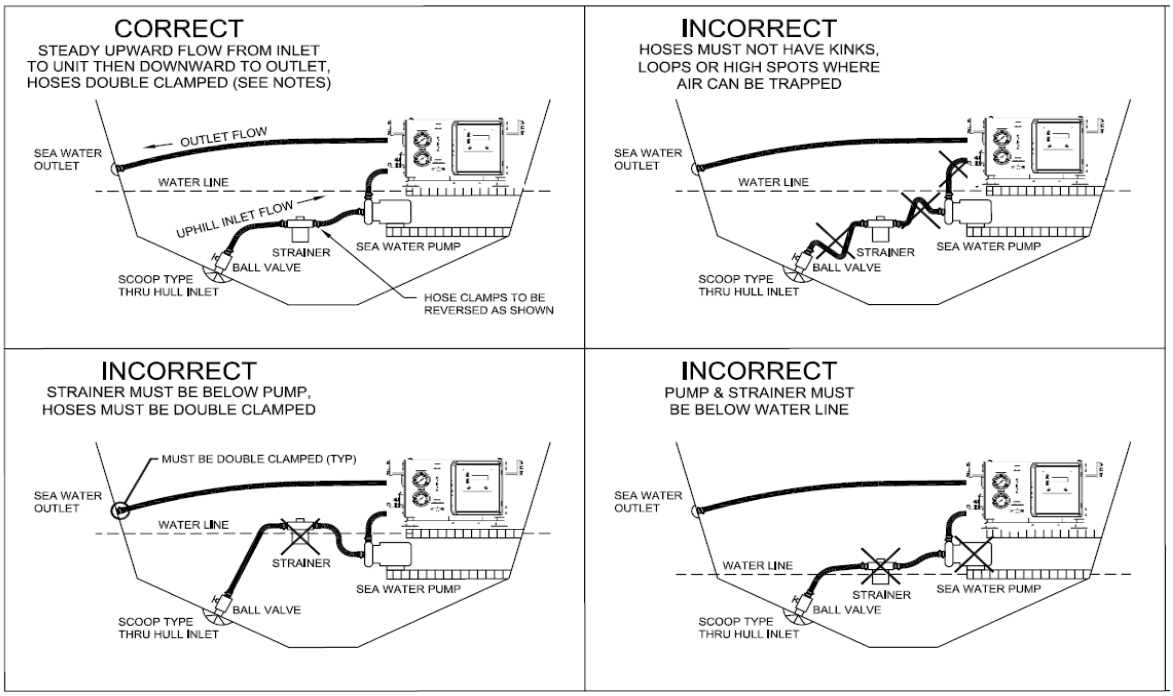

NOTES:
1) THRU HULL INLET, BALL VALVE, HOSE AND STRAINER SHOULD BE SIZED NO SMALLER THAN PUMP INLET.
2) INSTALL THRU HULL FITTING AS FAR BELOW THE WATER LINE AS POSSIBLE.
3) PUMP NEEDS DEDICATED THRU HULL NOT SHARED WITH OTHER PUMPS.
4) AVOID OR MINIMIZE 90° ELBOW FITTINGS AS MUCH AS POSSIBLE, ROTATE PUMP HEAD TOWARDS DIRECTION OF WATER FLOW.

COMPLETE INSTALL GUIDE

SEA WATER PLUMBING CONNECTIONS

5. Use supplied white 3/4" flexible hose from discharge of booster pump to **Pre-Filter Inlet** connection on **Sea Xchange Sediment** filter assembly located on left side of system. Filter assembly may be remote mounted if desired. Be sure that there are no kinks in hose run and avoid 90's where possible to prevent restricted flow.

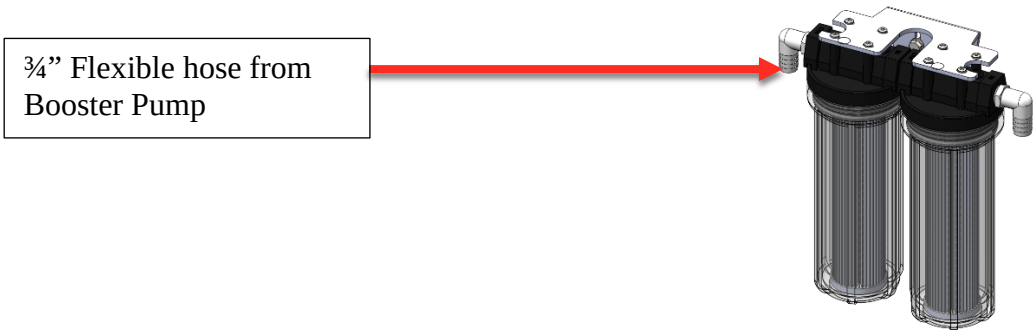

6. Double clamp all sea water hose connections to prevent potential leaks.

7. Locate connection labeled "**Overboard**" on lower left side of system. Run supplied white 1/2" tube to a dedicated overboard connection.

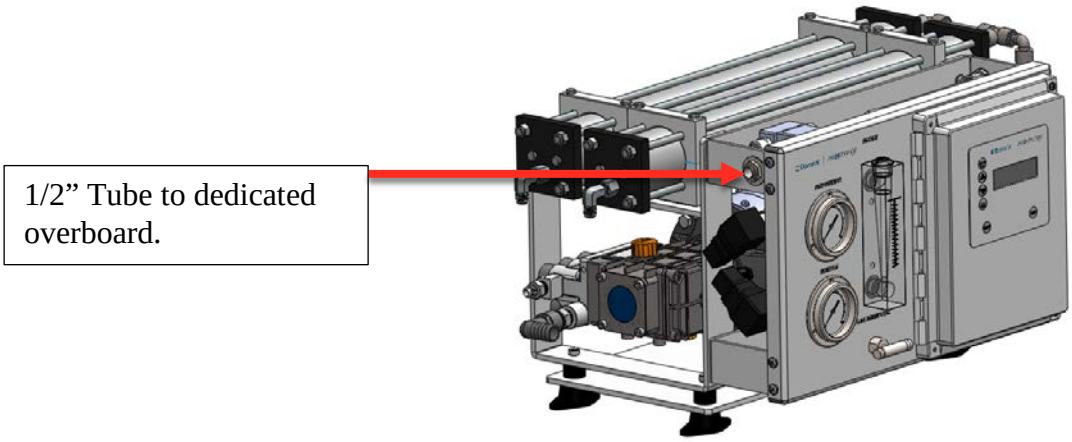

WARNING - SEA WATER OVERBOARD MUST NEVER BE CLOSED OR OBSTRUCTED WHILE SYSTEM IS OPERATIONAL. CLOSING OR OBSTRUCTING THE OVERBOARD FLOW ON SYSTEM MAY CAUSE PERMANENT DAMAGE TO SYSTEM.

COMPLETE INSTALL GUIDE

PRODUCT TO TANK CONNECTION

1. Locate the fitting labeled **Product to Tank** on left side of system. Connect supplied white 3/8” tubing from system to the highest point of the vessels fresh water tank.

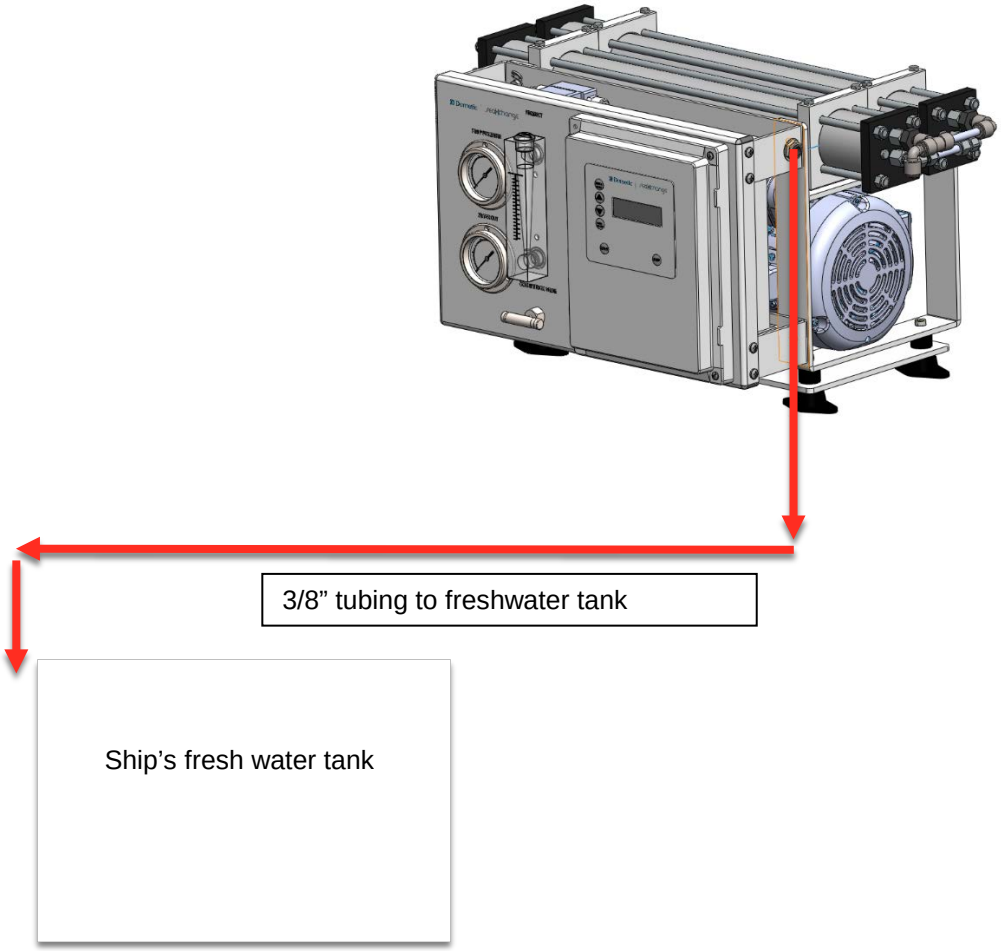

WARNING - SHIPS FRESH WATER TANK MUST BE VENTED PROPERLY TO AVOID BACK PRESSURE ON SYSTEM. FAILURE TO DO SO MAY CAUSE PERMANENT DAMAGE TO SYSTEM AND/OR TO NOT FUNCTION PROPERLY.

WARNING - PRODUCT TO TANK MUST NEVER BE CLOSED OR OBSTRUCTED WHILE SYSTEM IS OPERATIONAL. CLOSING OR OBSTRUCTING THE PRODUCT FLOW ON SYSTEM MAY CAUSE PERMANENT DAMAGE TO SYSTEM AND/OR TO NOT FUNCTION PROPERLY.

COMPLETE INSTALL GUIDE

FRESH WATER FLUSH CONNECTION

1. Locate filter assembly labeled **Fresh Water Flush** and connect the inlet of fresh water flush solenoid to the ship's pressurized fresh water system.

NOTE - A SHUT OFF VALVE IS RECOMMENDED TO BE INSTALLED ON SUPPLY LINE TO FRESH FLUSH ASSEMBLY FOR SERVICE.

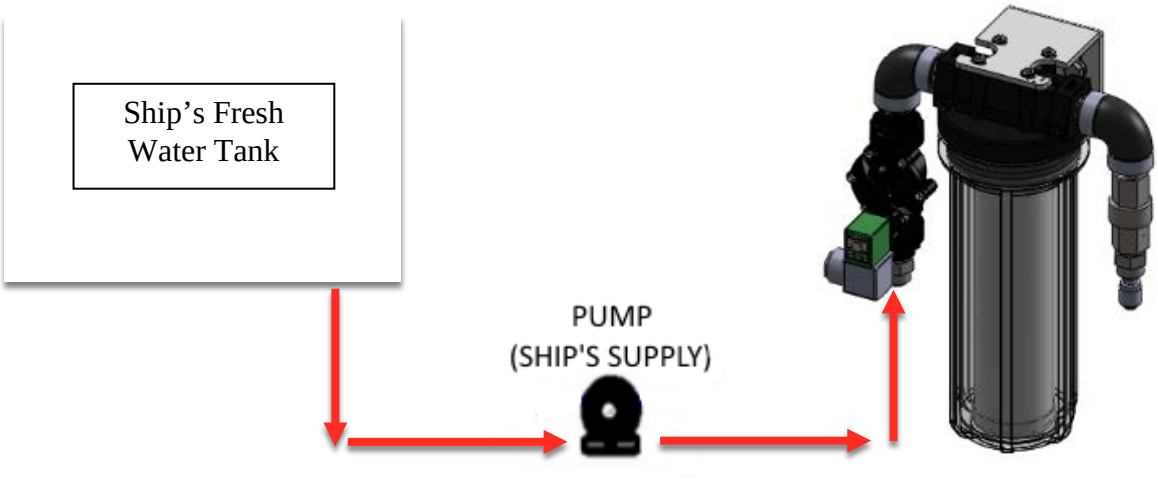

2. Run supplied white ¼" tubing from outlet filter assembly labeled **Fresh Water Flush** and connect to ¼" tubing fitting on face of booster pump.

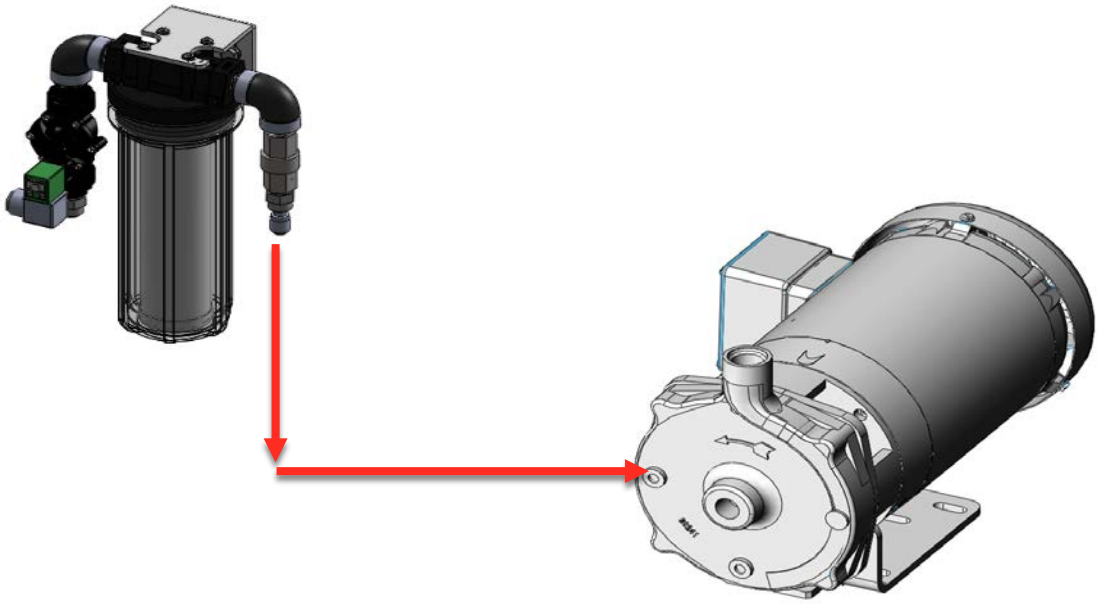

COMPLETE INSTALL GUIDE

ELECTRICAL CONNECTIONS

1. Connect main power supply to main power terminal blocks, connect power to booster pump from contactor as shown below. Ground main power supply and booster pump to grounding bus bar located inside control box.

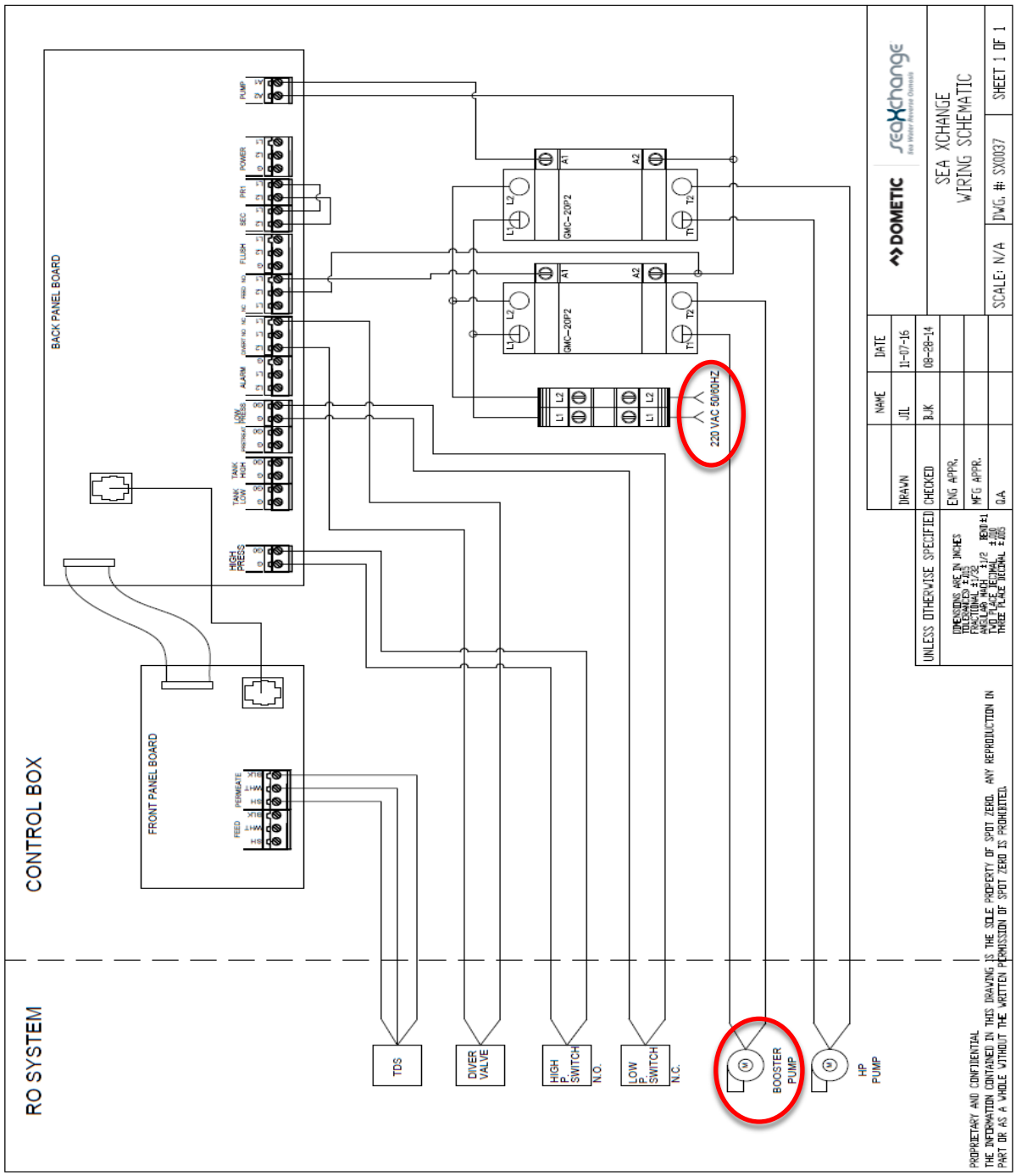

COMPLETE INSTALL GUIDE

ELECTRICAL CONNECTIONS

2. Connect fresh water flush power leads as shown below.

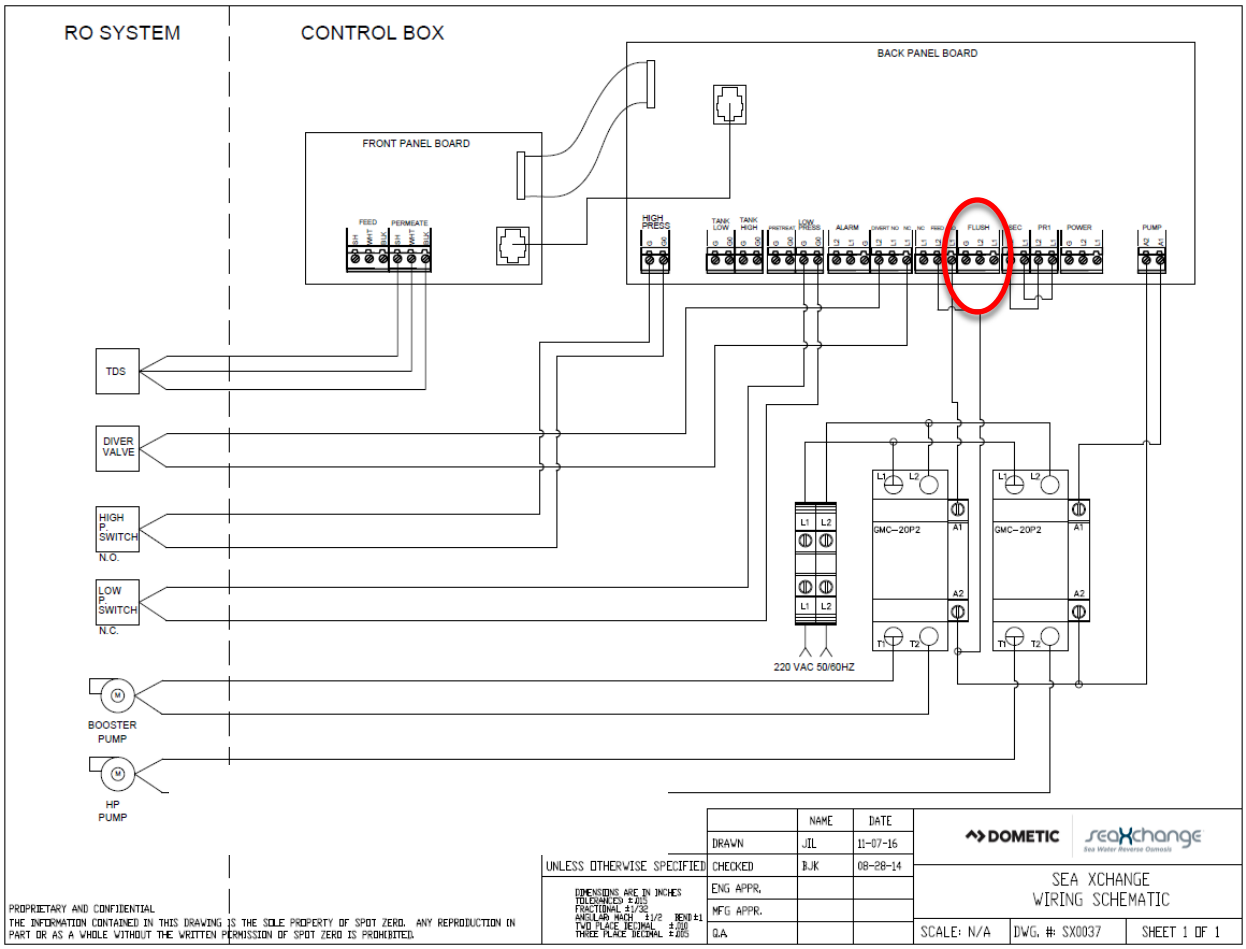

NEW SYSTEM START-UP

INSPECTION

Carefully inspect your system before initial start-up. Check that all plumbing and electrical connections are not loose or have not come undone during shipment. A User's Manual, Test Results, and Filter Housing Wrench will accompany your SE-Series Reverse Osmosis System.

NOTE: LEAVE THE POWER TO THE SYSTEM OFF FOR THE SYSTEM PURGE PROCEDURE.

SYSTEM PURGE

1. Redirect product water to the drain for this procedure.
2. Fully open the concentrate valve by turning it counter clockwise.

3. With a flat head screw driver, turn set screw ¼ turn clockwise on the Fresh Water Flush solenoid valve (see drawing below). Allow the system to purge 30 minutes to flush the preservative solution from the system.

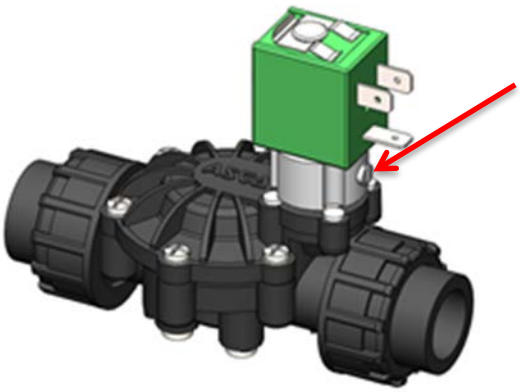

NEW SYSTEM START-UP

SYSTEM PURGE

4. Turn the RO system on and adjust the concentrate valve by turning it clockwise to the specified system's production as noted on page 8, or until system reaches 850 psi: whichever occurs first.

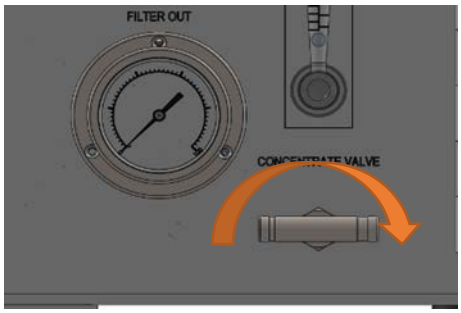

5. Inspect the system for leaks.
6. After 30 minutes, shut down the system.
7. Re-direct the product water back to the tank or point-of-use.
8. Record the readings daily for a week; after one week record the readings regularly.

NOTE: USE THE COMMISSIONING REPORT FORM ON THE NEXT PAGE

SEA XCHANGE COMMISSIONING REPORT FORM

System Information:

Model number - _____ Serial number - _____
Date of Commission - _____ Commissioned by- _____
Installed by - _____ Vessel hull number- _____

First step to commissioning a new system is to look over the install to be sure everything is installed correct. This checklist must be gone through prior to powering up the system.

___ Have all plumbing connections have been made, and secured?
___ Have all plumbing lines been run to the correct locations?
___ Is the boost pump installed below the water line?
___ Has wire reinforce hose been used on the suction side of the boost pump?
___ Is raw water intake open?
___ Is the overboard open and free of obstructions?
___ Is the system _____voltage, _____hertz, and _____phase correct?
___ Is the circuit breaker sized properly with sufficient wire gauge?
___ Is the power cable connected to the power inlet terminals of the system?

Now power up the system,
___ Are all displays on and functional?

At this time follow the start-up procedure in the manual and operate the system for an hour at its rated capacity, then record the following data.

System operating readings

Pre-filter inlet _____ psi Pre-filter outlet _____ psi
Concentrate pressure _____ psi Concentrate flow _____ gpm
Product flow _____ gpm Product TDS _____ ppm
Feed water TDS _____ ppm Feed water temperature _____ F or C
Hours on system _____ hrs Amp draw _____ Voltage _____
Location system was tested_____

Problems or other notes:

This Page Intentionally Left Blank

PART 3: OPERATION AND MAINTENANCE

CONTROLLER OVERVIEW

The Watermaker System Controller Documentation can be found in the manufacturer's index on page 76. The following is a quick overview of the front panel. Refer to this manual before starting to familiarize yourself with Watermaker Control Switches.

Watermaker Control Switches

Keypad
Power
Up Arrow
Down Arrow
Manual Flush

Display. (4 line, 20 character) Clear, concise feedback on the watermaker's status.

Alarm. Display backlight flashes along with audible beeper to indicate alarm condition.

Start

Stop

NORMAL OPERATION

START-UP

1. Make sure the sea cock to the booster pump is fully open.
2. Fully open the concentrate valve by turning counter clockwise (Figure 1).

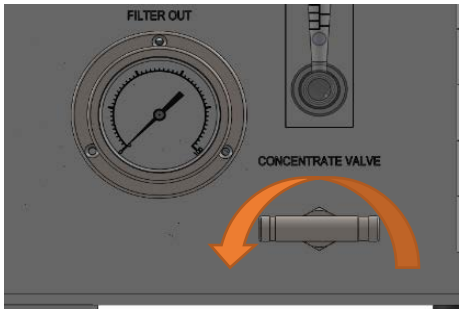

Figure 1

3. Turn the system ON (Figure 2)

Figure 2

4. Press the START button (Figure 3)

Figure 3

5. Wait 30 seconds for high pressure pump to turn ON

NORMAL OPERATION

START-UP

6. Pressurize the system to the rated flow turning the concentrate valve clockwise or 850 psi, whichever comes first. (Figure 4).

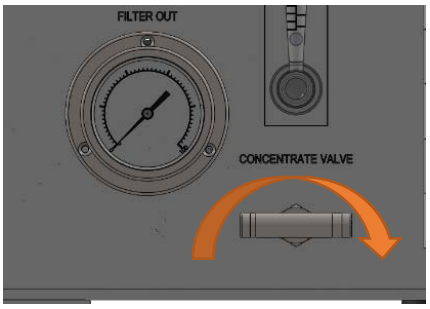

Figure 4

Note:
1. Product water production varies depending on the temperature of the feed water. Refer to temperature correction chart on page 12-13
2. Regulate concentrate valve to reach the rated flow (Figure 5) or 850PSI on the Pump Pressure gauge, whichever comes first.
3. See Table 1 for rated flows by model.

Table 1

MODEL	GPD	RATED FLOW (GPM)
SE350	350	.24
SE600-1 & SE600-2	600	.41
SE800	800	.55

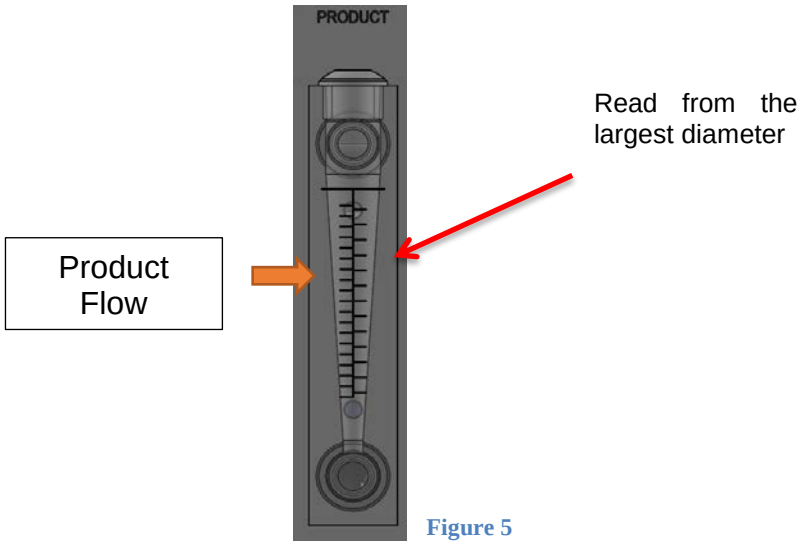

Figure 5

NORMAL OPERATION

SHUTDOWN

1. DO NOT leave vessel unattended while the machine is operating!
2. Once the vessel's tank is full, press the STOP button (Figure 6).

Figure 5

3. Fully open the concentrate valve in order to allow the FWF to clean the membrane and for the next start up (Figure 7).

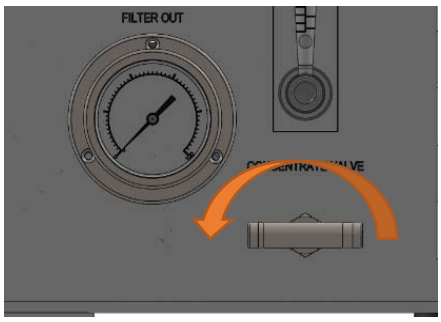

Figure 6

NOTE: NORMAL OPERATION IS RECOMMENDED WHEN STARTING AND STOPPING THE UNIT. THE REMOTE CONTROL CAN BE USED TO REMOTELY OPERATE THE UNIT IF THE TEMPERATURE AND THE CONCENTRATION (PPM) OF THE SUPPLY WATER DOES NOT CHANGE.

FRESHWATER FLUSH

1. The unit will FWF 10 seconds at the beginning of operation.
2. The FWF will automatically start after the high pressure pump turns off after each use.
3. FWF lasts for 10 minutes after the unit shuts down.
4. Leave the system power ON and vessel's fresh water system pressurized for the FWF to flush periodically (occurs automatically and set to happen every 7 days).

NORMAL OPERATION

OPERATIONAL DO's AND DON'Ts

DO

1. Change the FWF filter every 4 months.
2. Change sediment filters when **FILTER OUT** gauge reads less than 15psi.
3. Monitor the system and keep a daily log.
4. Adjust the system concentrate valve to recommended values.
5. Always run system with the recommended filters.

DON'T

1. Operate above (temperature corrected) rated production.
2. Operate above 850psi on pump pressure.
3. Permit chlorine to be present in the feed water.
4. Shut down the system for extended periods without preservation.
5. Close the concentrate valve completely.
6. Operate the system with insufficient feed flow.
7. Operate the high pressure pump or booster pump dry.

FRESH WATER FLUSH

AUTOMATIC FRESH WATER FLUSH

An automatic fresh water flush occurs when:

- The unit starts (10 second duration).
- The unit is shut down and the high pressure pump shuts off (duration is 10 minutes).
- Every 7 days when the unit power is left ON.

MANUALLY FLUSHING THE SYSTEM (Manual Bypass on solenoid)

The system should be flushed weekly to remove sediment from the surface of the membranes. To manually flush the system, follow the preceding steps:

1. Unit not in operation.
2. Unit electrical supply does not have to be secured.
3. With a flat head screw driver, turn set screw ¼ turn clockwise on the FWF solenoid valve (see picture below).

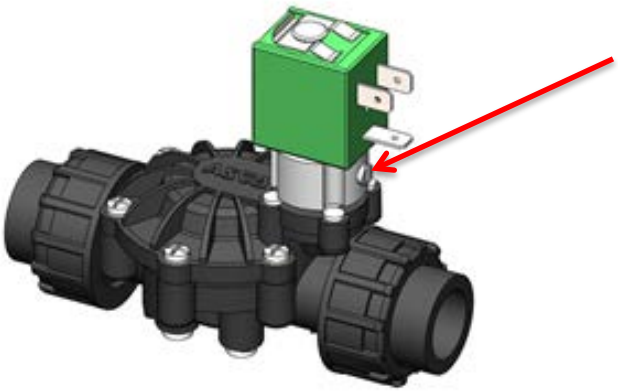

STORAGE OR WINTERIZATION OF UNIT

Option 1: Storage with Fresh Water Flush

When a system will not be used for a significant period of time (i.e. 3 months – 1 year), the best practice for storage of the system is to allow the automatic fresh water flush to operate by leaving the power to the system on and ensuring that the vessels fresh water system is ON and pressurized. Normal replacement of fresh water flush filter is still required every 4 months.

Option 2: Storage without Fresh Water Flush:

If the vessel will not be able to allow for fresh water flushing over the duration of the storage period, the membrane vessels must have static water replaced with membrane storage chemical solution. Membrane storage chemical part # is 252404263.

Option 3: Winterization

Option 3a: Winterization with membrane rack removal - The best practice for winterization is to remove membrane rack and store with membrane storage chemical in heated storage climate. The remainder of the system should be stored with propylene glycol from sea cock to overboard to prevent freeze damage (propylene glycol can be purchased at most hardware or automotive retailers).

Option 3b: Winterization without membrane rack removal - If the system will be exposed to freezing or near freezing temperature while being stored and the membrane rack can not be removed and stored in heated climate,the following should be done. A 50% solution of storage chemical and 50% propylene glycol, (propylene glycol can be purchased at most hardware or automotive retailers), should be run through the entire system from sea cock to overboard and then close both sea cock and overboard. Membrane storage chemical part # is 252404263.

WARNING: DO NOT USE ETHYLENE GLYCOL, ONLY NON-TOXIC PROPYLENE GLYCOL SHOULD BE USED.

Re-commissioning of System after Storage or Winterization

After storage or winterization, the system must be completely voided of all storage chemical and or propylene glycol. To do this, follow the new system startup guide on page 32.

MEMBRANE REMOVAL AND REPLACEMENT

REMOVAL AND REPLACEMENT

Removing and replacing membranes in the pressure vessels is an easy process if you have the proper information and tools at hand. Please refer to the following instructions when removing and replacing membrane elements.

WARNING: ALL PRESSURE GAUGES MUST READ ZERO BEFORE PROCEEDING. BEFORE ATTEMPTING, DISCONNECT THE POWER FROM THE SYSTEM AND BLEED ALL WATER PRESSURE FROM THE SYSTEM.

NOTE: WEAR GLOVES FOR THE FOLLOWING STEPS IN ORDER NOT TO CONTAMINATE THE MEMBRANE.

1. Remove the end plugs from the side of the pressure vessels. This is done by removing the four 3/8” nuts and washers; the end plugs should then freely slide out of the pressure vessel.

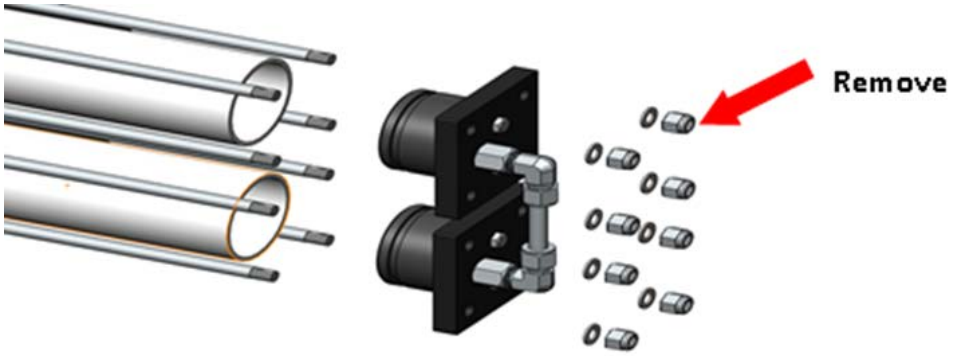

2. Remove the replacement membrane element(s) from the shipping box; the membrane(s) should be contained within a plastic oxygen barrier bag.

3. Cut the bag open as close as possible to the seal at one end of the bag, so the bag may be re-used if necessary.

4. Make sure that all parts are clean and free from dirt. Examine the brine seal, and product tube for nicks or cuts. Replace the O-rings or brine seal if damaged.

MEMBRANE REMOVAL AND REPLACEMENT

REMOVAL AND REPLACEMENT

5. Flow directions should be observed for installation of each element into its respective pressure vessels.

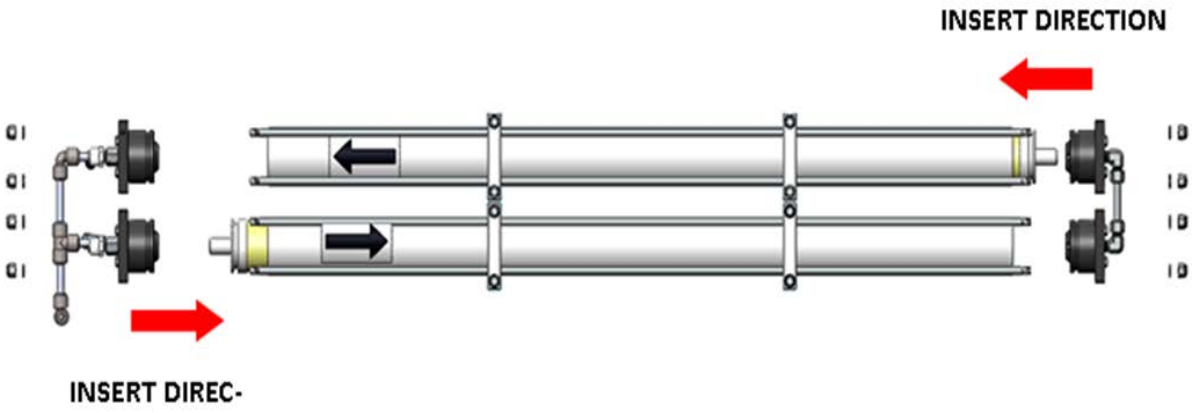

6. Remove one membrane element at a time from the pressure vessels, from the side of each housing. Long nose pliers may be necessary to pull the old membrane element out of the membrane element housing.

7. Lubricate the brine seal with a non-petroleum based lubricant, such as Dow Corning® 111 part # 252404879.

8. Install membranes with brine seal at the supply side of the vessel

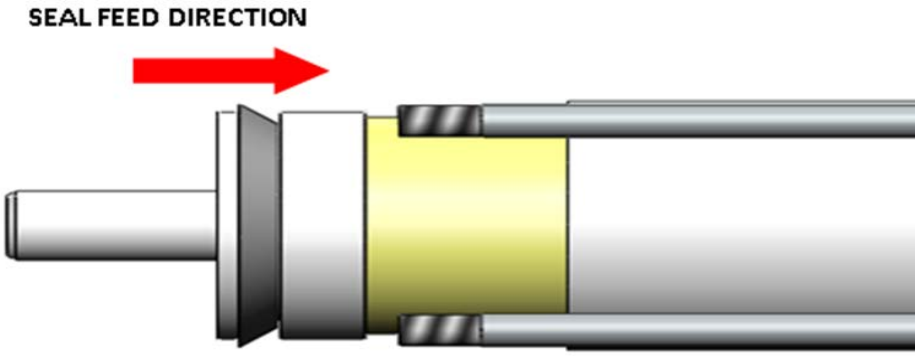

WARNING: THE BRINE SEAL MUST BE IN THE SAME POSITION FOR EACH MEMBRANE ELEMENT HOUSING, SO MARK EACH HOUSING PRIOR TO REMOVING THE MEMBRANE ELEMENTS. THE BRINE SEAL IS A RUBBER SEAL THAT PROTRUDES ON ONE SIDE OF THE MEMBRANE AND IS ALWAYS ON THE FEED SIDE OF THE MEMBRANE ELEMENT.

MEMBRANE REMOVAL AND REPLACEMENT

REMOVAL AND REPLACEMENT

9. With a smooth and constant motion, push the membrane element into the housing so the brine seal enters the housing without coming out of the brine seal groove.

10. Re-install the end plugs by gently twisting the end cap while pushing it onto the housing. Ensure that you do not pinch or fatigue any O-rings while re-installing the end plug. Push the end plug on until the plug is flush with the pressure vessel.

11. Insert the four rods through the plate and fasten using a 3/8 wrench and a flat screw driver.

12. Reconnect any fittings that may have been disconnected when the membrane pressure vessels were disassembled.

13. To Start-Up the system, please refer to the Normal Start-Up section of this manual. *(See page 38)*

CAUTION: WET MEMBRANES ARE SHIPPED IN A PRESERVATIVE SOLUTION. THE MEMBRANES MUST BE FLUSHED FOR AT LEAST 30 MINUTES TO REMOVE THE PRESERVATIVE FROM THE MEMBRANE. DISCARD ALL OF THE PRODUCT AND CONCENTRATE, WHICH IS PRODUCED DURING THE FLUSH PERIOD

HIGH PRESSURE PUMP OIL CHANGE

[LC: This section is a terrific improvement and extremely useful. Two questions: When should this oil be changed? What kind of oil should be used?]

OIL CHANGE STEPS

1. Run unit for 30 minutes prior to draining oil
2. Drain or pump the oil out of the pump. If draining, locate and remove the drain plug, then use a small container that can be placed under the pump casing. (A small hand pump can be used to pump the oil out through the oil fill cap instead of draining the oil through the drain plug.) Dispose of oil properly.

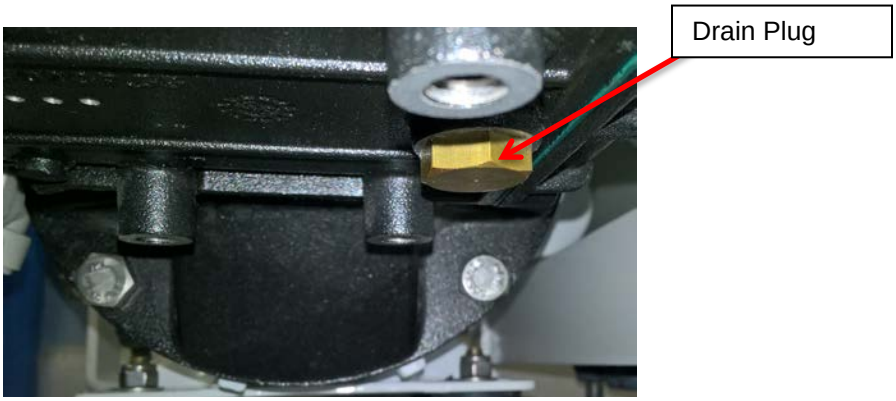

3. Install the drain plug back in the high pressure pump.
4. Locate and remove oil fill cap.

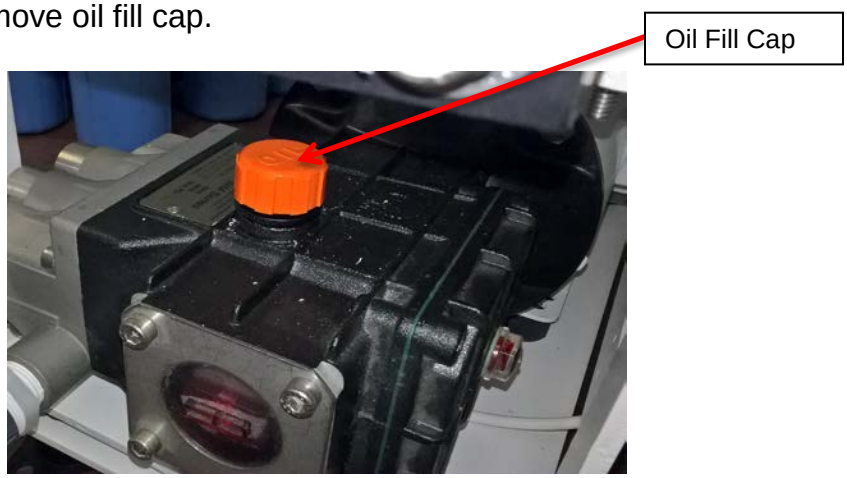

HIGH PRESSURE PUMP OIL CHANGE

OIL CHANGE STEPS

5. Fill oil above the center of sight glass not exceeding the very top of the site glass. (refer to picture below)

6. Screw fill cap back onto top of high pressure pump

NOTE: OIL LEVEL CAN ONLY BE CHECKED WITH THE UNIT NOT RUNNING

This Page Intentionally Left Blank

PART 4: TROUBLESHOOTING

REVERSE OSMOSIS TROUBLESHOOTING

SYMPTOMS	POSSIBLE CAUSES	CORRECTIVE ACTION
LOW INLET PRESSURE	Low supply pressure	Increase Inlet Pressure
	Cartridge filters plugged	Change Filters
	Leaks	Fix any visible leaks
LOW PRODUCT FLOW	Cold feed water	See temperature correction sheet
	Low operating pressure	Adjust throttle and concentrate valve
	Defective membrane brine seal/ Membrane installed backwards	Replace brine seal and / or Reposition membranes
	Fouled or Scaled membrane	Clean membranes
	Damaged product tube O-rings	Inspect and/or replace
HIGH PRODUCT FLOW	Damaged or oxidized membrane	Replace membrane
	Exceeding maximum feed water temperature	See temperature correction sheet
	Low operating pressure	Adjust concentrate valve
POOR PRODUCT QUALITY	Damage product tube O-rings	Inspect and/or replace
	Damaged or oxidized membrane	Replace membrane
MEMBRANE FOULING	Scaling ($CaSO_4$, $CaSO_3$, $BaSO_4$, SiO_2)	Reduce recovery. Clean with Acid Cleaners
	Biological Fouling	Clean Membranes
	Organic Fouling	Clean with high pH cleaner.
	Chlorine Oxidation	Check Chlorine feed equipment and de-chlorination system.

NOTE: CONTACT YOUR LOCAL DOMETIC SERVICE DEALER IF FURTHER TROUBLESHOOTING IS NEEDED.

ABNORMAL PRODUCT FLOW

As time progresses, the efficiency of the membrane will be reduced. In general, the salt rejection does not change significantly until two or three years after installation when operated on properly pretreated feed water. The product flow rate will begin to decline slightly after one year of operation, but can be extended with fresh water flushing of the system. A high pH and/or precipitation of hardness can cause premature loss in rejection.

Product flow should be within 20% of the rated production, after correcting the feed water temperatures above or below 77°F. Check your product flow meter and correction chart to determine the product flow rate.

NOTE: TO DETERMINE THE TEMPERATURE CORRECTION FACTOR, LOCATE THE TEMPERATURE CORRECTION TABLE IN THIS USER'S MANUAL ON PAGE 12 AND FOLLOW THE DIRECTIONS.

PRESSURE SWITCH ADJUSTMENT

The low and high pressure switch come factory calibrated. The setting for each switch is the following:

- LP - 5psi
- HP - 950psi

If field calibration is necessary then follow the steps below to adjust the switch.

NOTE: THE SWITCH ADJUSTMENT STEPS ARE THE SAME FOR BOTH LP AND HP SWITCHES

1. Locate the switches on the left side of the unit just behind the main panel.

PRESSURE SWITCH ADJUSTMENT

2. Remove the sealed cap from pressure switch

3. Adjust set point with 5/64th Allen wrench, clockwise to increase setting and counterclockwise to lower the setting.

DIVERSION VALVE

BY-PASS

If the electrical portion of the solenoid fails or the controller fails to energize the solenoid, a manual bypass on the diversion valve may be utilized if the product water is found to be acceptable. Refer to picture below and the Diversion Valve manual on page 114.

NOTE!

- When the manual control is locked, the valve cannot be actuated electrically.

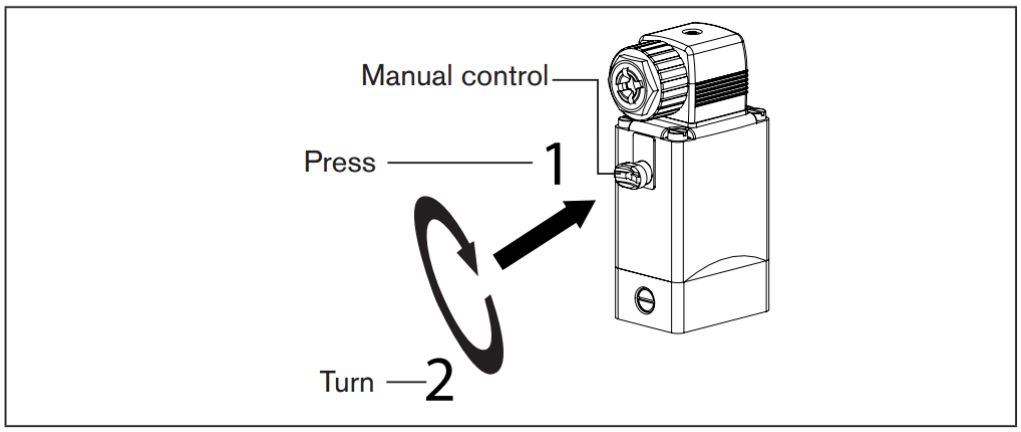

PART 5: PARTS

SE SERIES PARTS LIST

DRAWING	ITEM	PART NUMBER	DESCRIPTION
SE MODEL GENERAL EXPLOSION *PAGE 62*	1	252404800	5/16" x 1" SS HEX FLAT BOLT
	2	252404801	MOUNT, VIBRATION, 5/16'-18, 1" H X 1-3/8" W
	3	252404802	VIBRATION ISOLATOR, 50 LB MAX, 5/16-18
	4	252404803	MOUNT, VIBRATIONA2 , 5/16"-18 THREAD, 160LB CAPACITY
	5	252404804	GAUGE, 0-60 PSI, 2.5" DIA, SS, SG, 1/4" MNPT
	6	252404310	GAUGE, 0-1500 PSI, 2.5" DIA, SS, SG, 1/4" MNPT
	7	252404806	316 SS Flat Washer 5/16"
	8	252404807	5/16" LOCK WASHER SS
	9	252404162	2.5 GPM STAINLESS STEEL GENERAL PUMP
	10	252404154	1.5 HP MOTOR
	11	SEE DWG SX0105	VESSEL ARRAY ASSEMBLY
	12	252404051	WATERMAKER CONTROLLER
SEA EXCHANGE EXPLODED VIEW *PAGE 63*	1	252404179	SW MEMBRANE 40" LONG
	2	252404312	SW PRESSURE VESSEL 40" LONG
	3	252404178	SW MEMBRANE 20" LONG
	4	252404281	SW VESSEL 20" LONG
CONCENTRATE SIDE PARTS *PAGE 64*	1	252404814	END PLUG ONE PORT
	2	252404815	BEARING PLATE ONE PORT
	3	252404816	1/4-20 X BOLT SET OF 4
	4	252404817	HEX PORT
	5	252404818	1/4MNPT X 3/8 COMP. ELBOW SS
	6	252404868	3/8 SS S HP TUBING FOR CONC. SIDE 3" LONG
	7	252404819	3/8-16 LOCK NUT SET OF 8
	8	252404820	END PLUG O-RING
	9	252404821	1/4 SS WASHER

SE SERIES PARTS LIST

DRAWING	ITEM	PART NUMBER	DESCRIPTION
PRODUCT SIDE PARTS *PAGE 65*	1	252404822	END PLUG TWO PORT
	2	252404823	TWO PORT BEARING PLATE
	3	252404816	1/4-20 X BOLT SET OF 4(B1)
	4	252404817	HEX PORT
	5	252404274	1/4MNPT X 3/8 FLARE ELBOW SS
	6	252404125	1/4MNPT X 3/8QC ACETAL
	7	252404819	3/8-16 LOCK NUT SET OF 8
	8	252404821	3/8 WASHERS SET OF 8
	9	252404824	3/8QC X 3/8QC ELBOW ACETAL
	10	252404825	3/8QC TEE ACETAL
SW VESSEL O-RINGS *PAGE 66*	1	252404826	PORT SEAL O-RING
	2	252404827	END PLUG SEAL O-RING
	3	252404828	HUB SEAL O-RING
SE MOTOR AND PUMP PARTS *PAGE 67*	1	252404154	1.5HP MOTOR
	2	252404162	GP 2.5 GPM PUMP
	3	252404808	3/8 SSP COUNTERSUNK PLUG
	4	252404809	3/8QC x 1/4QC PLUG IN ELBOW
	5	252404810	MALE CONNECTOR 3/8"X1/2" MNPT ACETAL
	6	252404273	SSP 3/8 MNPT X 3/8 FLARE STRAIGHT
	7	252404811	3/4" x 1/2" REDUCER NIPPLE NYLON
	8	252404812	3/4" FNPT TO 3/4" BARB ELBOW
	9	252404813	3/8" x 3/4" SS HEX BOLTB1
	10	252404805	GP VENT OIL CAP

SE SERIES PARTS LIST

DRAWING	ITEM	PART NUMBER	DESCRIPTION
SXII/SE CONTROL PANEL PARTS *PAGE 68*	1	252404125	1/4MNPT X 3/8QC ACETAL
	2	252404829	PLUG IN ELBOW 3/8QC ACETAL
	3	252404002	3/8 TUBING
	4	252404828	3/8QC X 3/8QC ELBOW ACETAL
	5	252404831	1/4 HP SS TEE
	6	252404076	HIGH PRESSURE SWITCH 950PSI
	7	252404075	LOW PRESSURE SWITCH 5PSI
	8	252404832	3/8MNPT X 3/8QC ACETAL
	9	252404833	3/8 SS NEEDLE VALVE
	10	252404834	3/8 X 1/4 REDUCER HEX BUSHINGSS
	11	252404274	1/4MNPT X 3/8 FLARE HP SS ELBOW
	12	252404835	1/4" MNPT X 1/4" COMPRESSION ELBOW
	13	252404836	PLUG IN ELBOW 1/4 ACETAL
	14	252404837	1/4 SCHEDULE 80 SS REINFORCED TEE
SXII/SE CONTROL PANEL PARTS *PAGE 69*	1	252404829	PLUG IN ELBOW 3/8QC ACETAL
	2	252404832	3/8MNPT X 3/8QC ACETAL
	3	252404838	½ SCHEDULE 80 SS REINFORCED TEE
	4	252404839	TDS PROBE SENSOR-SP5
	5	252404821	¼ X ¼ COMP SS HP ELBOW
	6	252404869	3/8 HP SEAMLESS TUBING BENT fore P.GAUGE SXII-SE
SXII/SE CONTROL PANEL PARTS *PAGE 70*	1	252404002	3/8 TUBING
	2	252404829	PLUG IN ELBOW 3/8QC ACETAL
	3	252404840	1/2QC TO 3/8QC REDUCER STRAIGHT
	4	252404841	1/2QC TEE ACETAL
	5	252404003	1/2 TUBING
	6	252404842	1/2QC TO 3/8QC REDUCING ELBOW
	7	252404843	PLUG IN ELBOW 1/2QC ACETAL
	8	252404844	1/2QC ELBOW ACETAL
	9	252404845	3/8QC CHECK VALVE ACETAL
	10	252404846	1/2QC TO 1/2QC BULKHEAD

SE SERIES PARTS LIST

DRAWING	ITEM	PART NUMBER	DESCRIPTION
SXII/SE CONTROL PANEL PARTS *PAGE 71*	1	252404847	3/8QC TO 3/8QC BULKHEAD
	2	252404002	3/8 TUBING
	3	252404125	1/4MNPT X 3/8QC ACETAL
	4	252404083	3/2 BURKERT DIVERSION VALVE-230V
	5	252404257	3/2 BURKERT DIVERSION VALVE-115V
	6	252404829	PLUG IN ELBOW 3/8QC ACETAL
	7	252404848	DIN CONNECTOR PLUG
SX/XTC/SE PRE-FILTER SUB ASSEMBLY *PAGE 72*	1	252404854	10-24 X 1/2 PAN SS SCREW
	2	252404806	5/16 SS WASHER
	3	252404807	5/16 SS LOCK WASHER
	4	252404800	5/16 X 1 SS HEX BOLT
	5	252404861	1/2 MNPT X 3/4 BARB ELBOW NYLON
	6	252404862	1/2 NIPPLE 1.5" THREADED
	7	252404324	2.5 X 10 CLEAR HOUSING
	8	252404863	DOUBLE PRE-FILTER BRACKET
	9	252404836	1/4 PLUG IN ELBOW ACETAL
	10	252404864	1/4 MNPT TO 1/4QC CONNECTOR ACETAL
	11	252404292	25 MICRON FILTER
	12	252404291	5 MICRON FILTER
	13	252404856	2.5 x 10 CLEAR HOUSING O-RING
	14	252404326	WRENCH FOR 2.5 CELAR HOUSING

SE SERIES PARTS LIST

DRAWING	ITEM	PART NUMBER	DESCRIPTION
SXII/XTC/SE FRESH WATER FLUSH SUB ASSY *PAGE 73*	1	252404324	2.5 X 10 CLEAR HOUSING
	2	252404849	3/8 TO 1/4QC STEM REDUCER
	3	252404850	1/2 MNPT X 3/8QC CONNECTOR ACETAL
	4	252404851	1/2 THREADED NIPPLE
	5	252404852	1/2 FNPT REINFORCED ELBOW
	6	252404853	SINGLE PRE-FILTER BRACKET
	7	252404354	10-24 X 1/2 PAN SS SCREW
	8	SEE DWG	2-WAY SOLENOID
	9	252404855	DIN CONNECTOR
	10	252404856	2.5 CLEAR HOUSING O-RING
	11	252404014	CARBON BLOCK FILTER
	12	252404800	5/16 X 1 SS HEX BOLT
	13	252404807	5/16 SS LOCK WASHER
	14	252404806	5/16 SS WASHER
	15	252404217	1/2 SPRING CHECK VALVE
	16	252404326	WRENCH FOR 2.5 CELAR HOUSING
	17	202404858	WATER RESTRICTOR 1.0

SE DRAWINGS

SE MODEL

ITEM #	PART #	DESCRIPTION
1	252404800	5/16" x 1" SS HEX FLAT BOLT
2	252404801	MOUNT, VIBRATION, 5/16'-18, 1" H X 1-3/8" W
3	252404802	VIBRATION ISOLATOR, 50 LB MAX, 5/16-18
4	252404803	MOUNT, VIBRATIONA2 , 5/16"-18 THREAD, 160LB CAPACITY
5	252404804	GAUGE, 0-60 PSI, 2.5" DIA, SS, SG, 1/4" MNPT
6	252404310	GAUGE, 0-1500 PSI, 2.5" DIA, SS, SG, 1/4" MNPT
7	252404806	316 SS Flat Washer 5/16"
8	252404807	5/16" LOCK WASHER SS
9	252404162	2.5 GPM STAINLESS STEEL GENERAL PUMP
10	252404154	1.5 HP MOTOR
11	SEE DWG SX0105	VESSEL ARRAY ASSEMBLY
12	252404051	WATERMAKER CONTROLLER

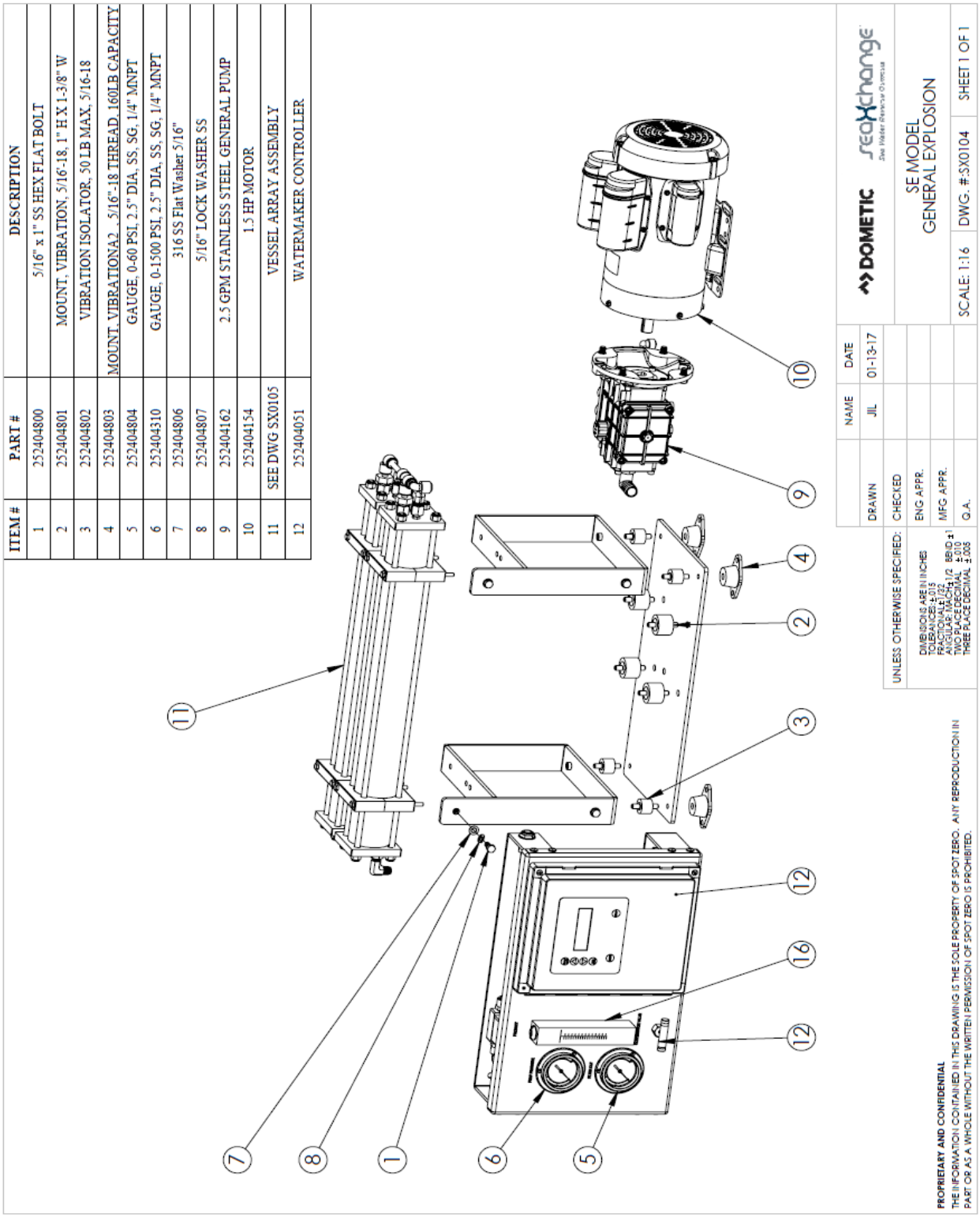

SE DRAWINGS

SEA EXCHANGE VESSEL

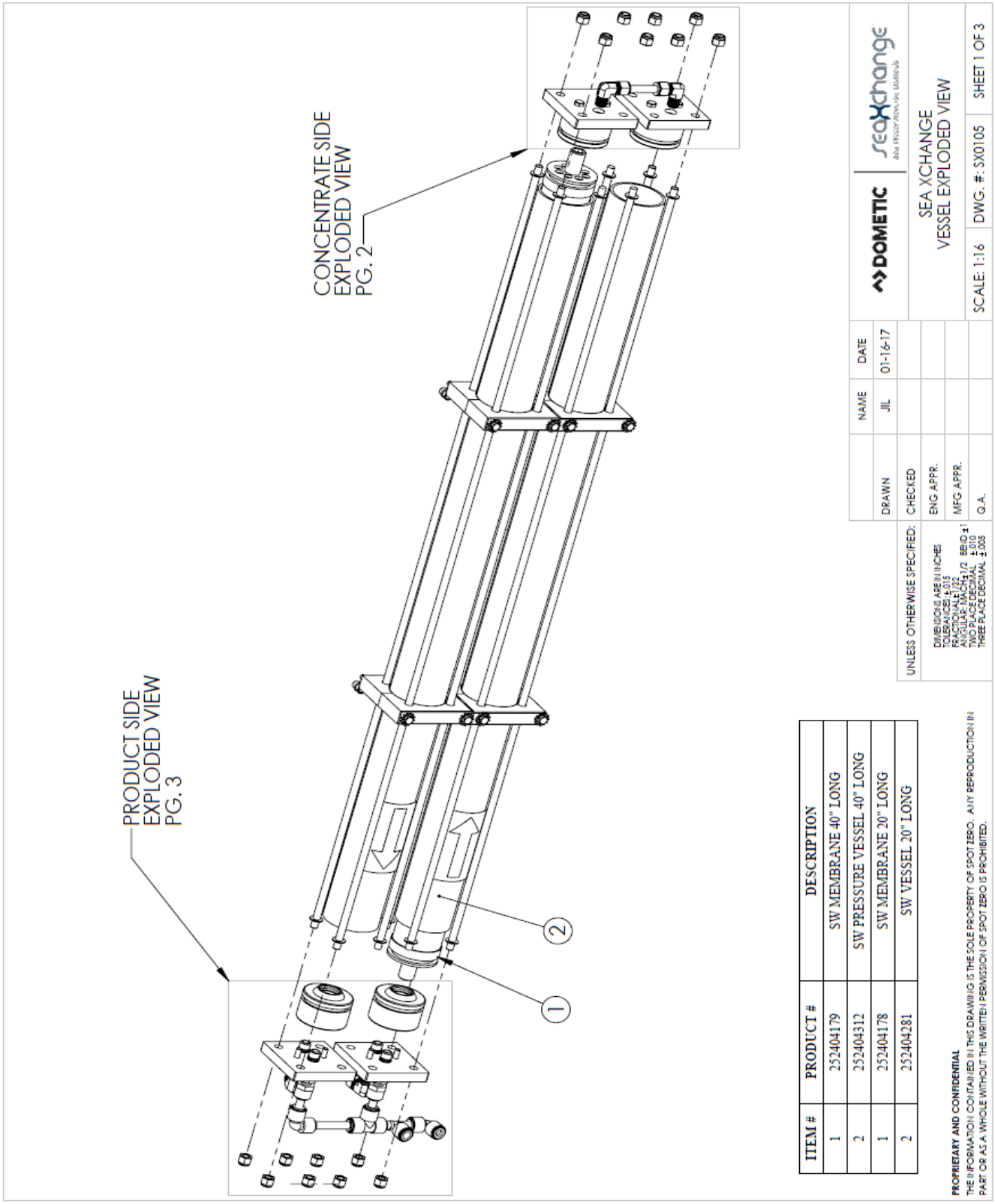

SE DRAWINGS

SEA EXCHANGE VESSEL

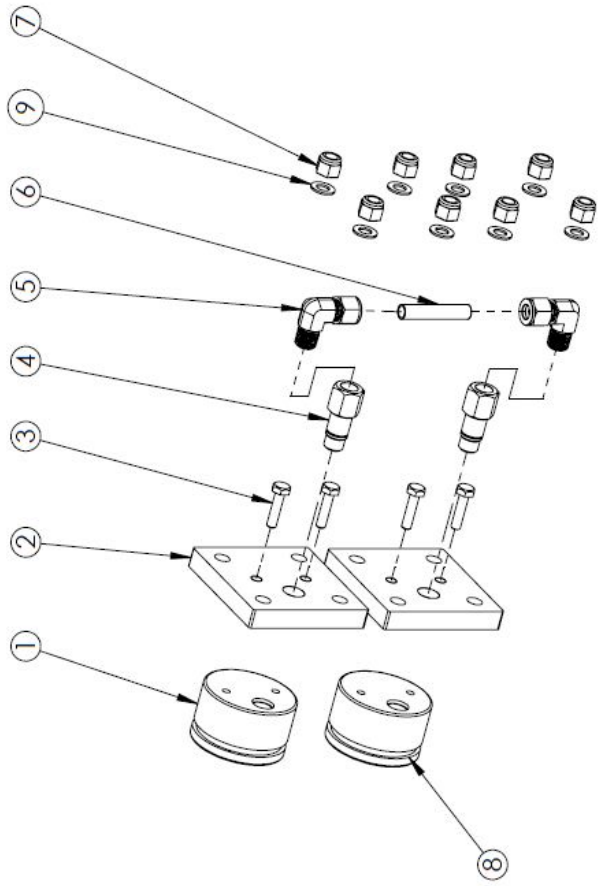

ITEM #	PRODUCT #	DESCRIPTION
1	252404814	END PLUG ONE PORT
2	252404815	BEARING PLATE ONE PORT
3	252404816	1/4-20 X BOLT SET OF 4
4	252404817	HEX PORT
5	252404271	1/4MNPT X 3/8 COMP. ELBOW SS
6	252404868	3/8 SS S HP TUBING FOR CONC. SIDE 3" LONG
7	252404819	3/8-16 LOCK NUT SET OF 8
8	252404820	END PLUG O-RING
9	252404821	1/4 SS WASHER

UNLESS OTHERWISE SPECIFIED:
DIMENSIONS ARE IN INCHES
TOLERANCES: ±.015
FRACTIONALS 1/32
ANGULAR: MACH±1/2 BEND ±1
TWO PLACE DECIMAL ±.010
THREE PLACE DECIMAL ±.005

	NAME	DATE
DRAWN	JILI	08-07-17
CHECKED		
ENG APPR.		
MFG APPR.		
Q.A.		

DOMETIC

seaXchange

CONCENTRATE SIDE PARTS

SCALE: 1:16 | DWG. #SX0105 | SHEET 2 OF 4

PROPRIETARY AND CONFIDENTIAL
THE INFORMATION CONTAINED IN THIS DRAWING IS THE SOLE PROPERTY OF SPOT ZERO. ANY REPRODUCTION IN PART OR AS A WHOLE WITHOUT THE WRITTEN PERMISSION OF SPOT ZERO IS PROHIBITED.

SE DRAWINGS

SEA EXCHANGE VESSEL

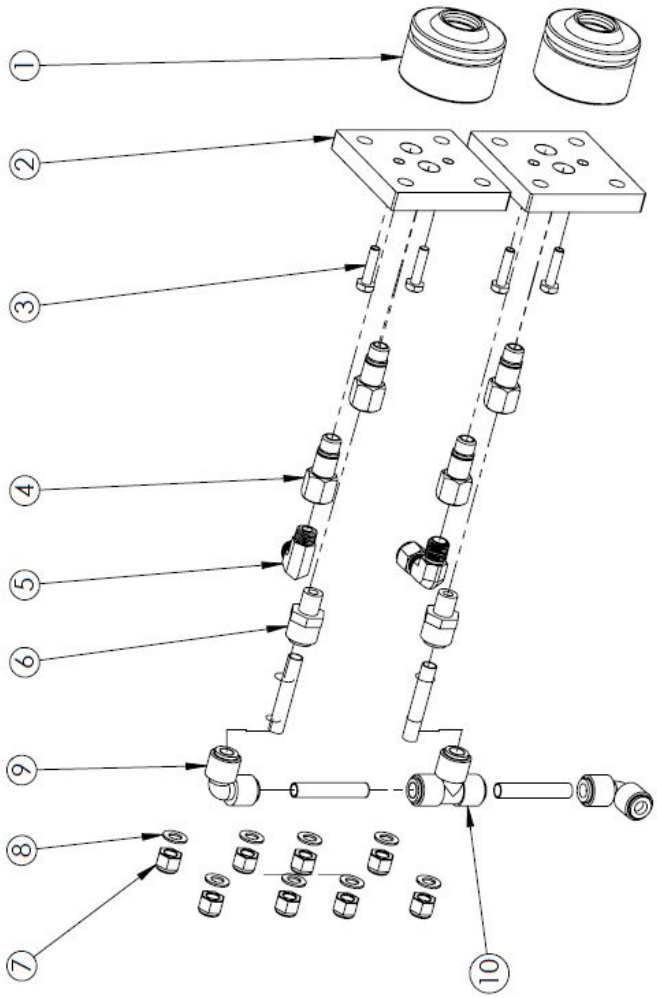

ITEM #	PRODUCT #	DESCRPITION
1	252404822	END PLUG TWO PORT
2	252404823	TWO PORT BEARING PLATE
3	252404816	1/4-20 X BOLT SET OF 4B1
4	252404817	HEX PORT
5	252404274	1/4MNPT X 3/8 FLARE ELBOW SS
6	252404125	1/4MNPT X 3/8QC ACETAL
7	252404819	3/8-16 LOCK NUT SET OF 8
8	252404821	3/8 WASHERS SET OF 8
9	252404109	3/8QC X 3/8QC ELBOW ACETAL
10	252404114	3/8QC TEE ACETAL

PROPRIETARY AND CONFIDENTIAL
THE INFORMATION CONTAINED IN THIS DRAWING IS THE SOLE PROPERTY OF SPOT ZERO. ANY REPRODUCTION IN PART OR AS A WHOLE WITHOUT THE WRITTEN PERMISSION OF SPOT ZERO IS PROHIBITED.

UNLESS OTHERWISE SPECIFIED:
DIMENSIONS ARE IN INCHES
TOLERANCES:
FRACTIONAL ±1/32
ANGULAR: MACH ±1/2 BEND ±1
TWO PLACE DECIMAL ±.010
THREE PLACE DECIMAL ±.005

	NAME	DATE
DRAWN	JIL	08-07-17
CHECKED		
ENG APPR.		
MFG APPR.		
Q.A.		

DOMETIC seaXchange

PRODUCT SIDE PARTS

SCALE: N/A | DWG.#: SX0105 | SHEET 3 OF 4

SE DRAWINGS

SEA EXCHANGE VESSEL

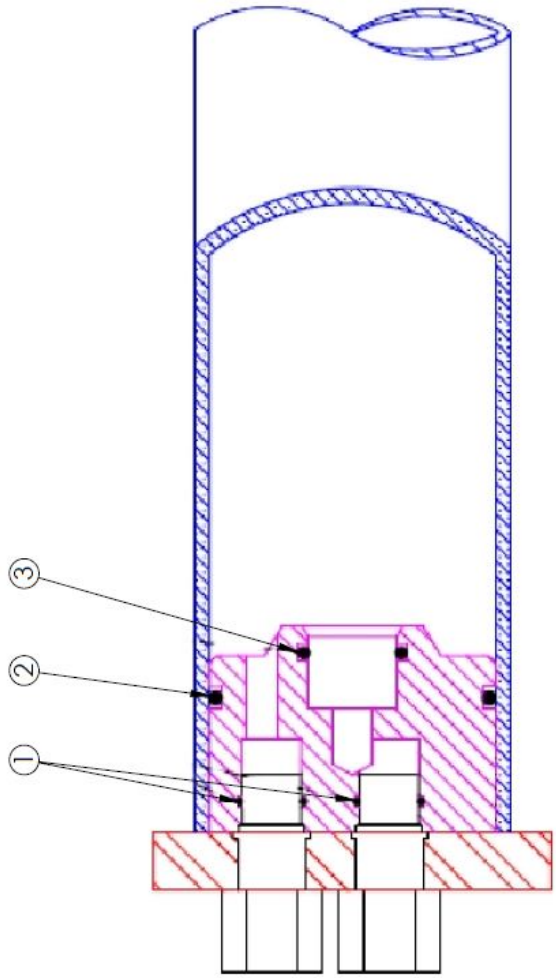

ITEM #	PART #	DESCRIPTION
1	252404826	PORT SEAL O-RING
2	252404820	END PLUG SEAL O-RING
3	252404828	HUB SEAL O-RING

SEAL KIT: 252404266

PROPRIETARY AND CONFIDENTIAL
THE INFORMATION CONTAINED IN THIS DRAWING IS THE SOLE PROPERTY OF SPOT ZERO. ANY REPRODUCTION IN PART OR AS A WHOLE WITHOUT THE WRITTEN PERMISSION OF SPOT ZERO IS PROHIBITED.

UNLESS OTHERWISE SPECIFIED:
DIMENSIONS ARE IN INCHES
TOLERANCES: ±.015
FRACTIONAL ±1/32
ANGULAR: MACH ±1/2 BEND ±1
TWO PLACE DECIMAL ±.010
THREE PLACE DECIMAL ±.005

	NAME	DATE
DRAWN	JIL	08-07-17
CHECKED		
ENG APPR.		
MFG APPR.		
Q.A.		

DOMETIC seaXchange

SW VESSEL O-RINGS

SCALE: N/A | DWG. #SX0105 | SHEET 4 OF 4

SE DRAWINGS

SE MOTOR AND PUMP

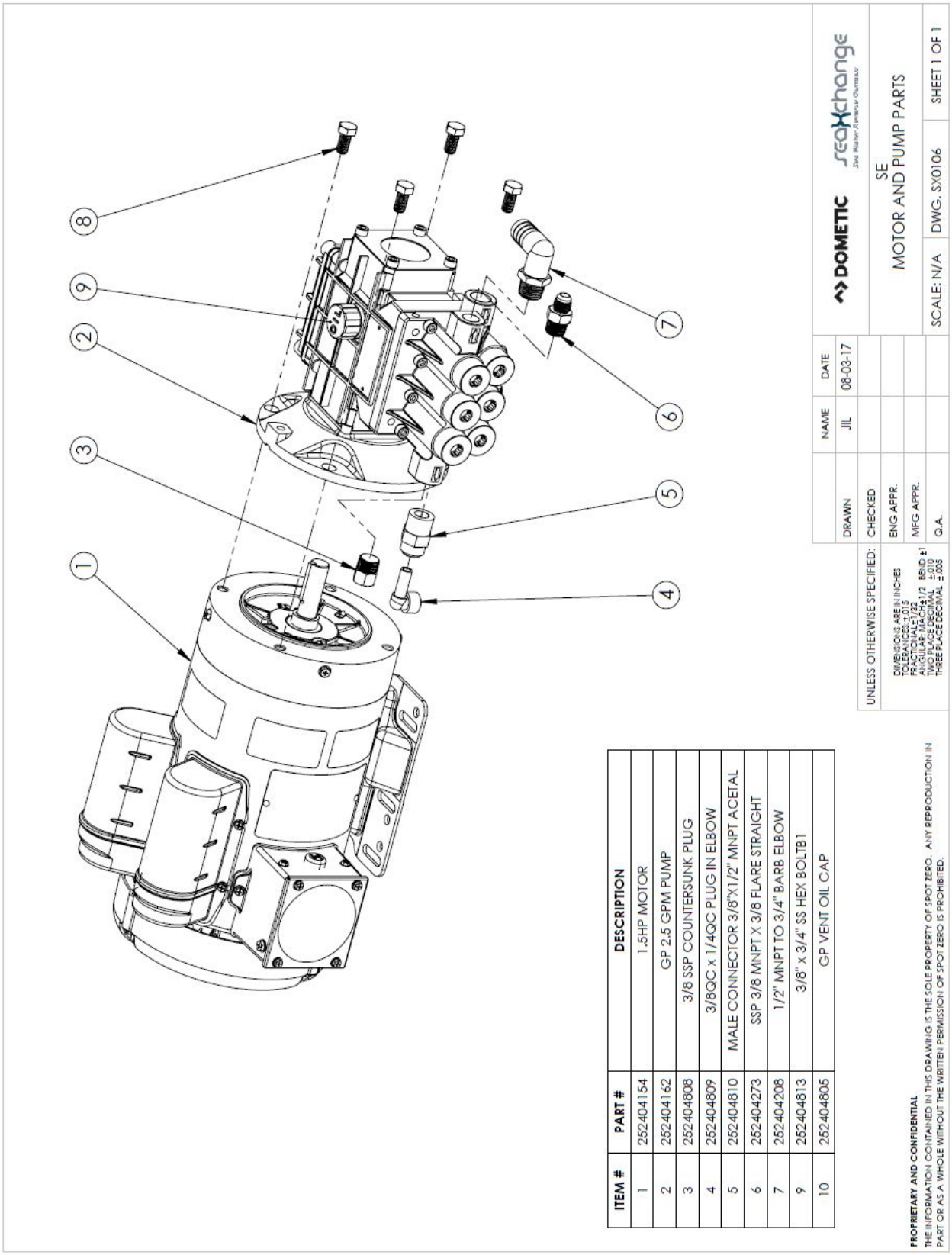

ITEM #	PART #	DESCRIPTION
1	252404154	1.5HP MOTOR
2	252404162	GP 2.5 GPM PUMP
3	252404808	3/8 SSP COUNTERSUNK PLUG
4	252404809	3/8QC x 1/4QC PLUG IN ELBOW
5	252404810	MALE CONNECTOR 3/8"X1/2" MNPT ACETAL
6	252404273	SSP 3/8 MNPT X 3/8 FLARE STRAIGHT
7	252404208	1/2" MNPT TO 3/4" BARB ELBOW
9	252404813	3/8" x 3/4" SS HEX BOLTB1
10	252404805	GP VENT OIL CAP

SE DRAWINGS

CONTROL PANEL

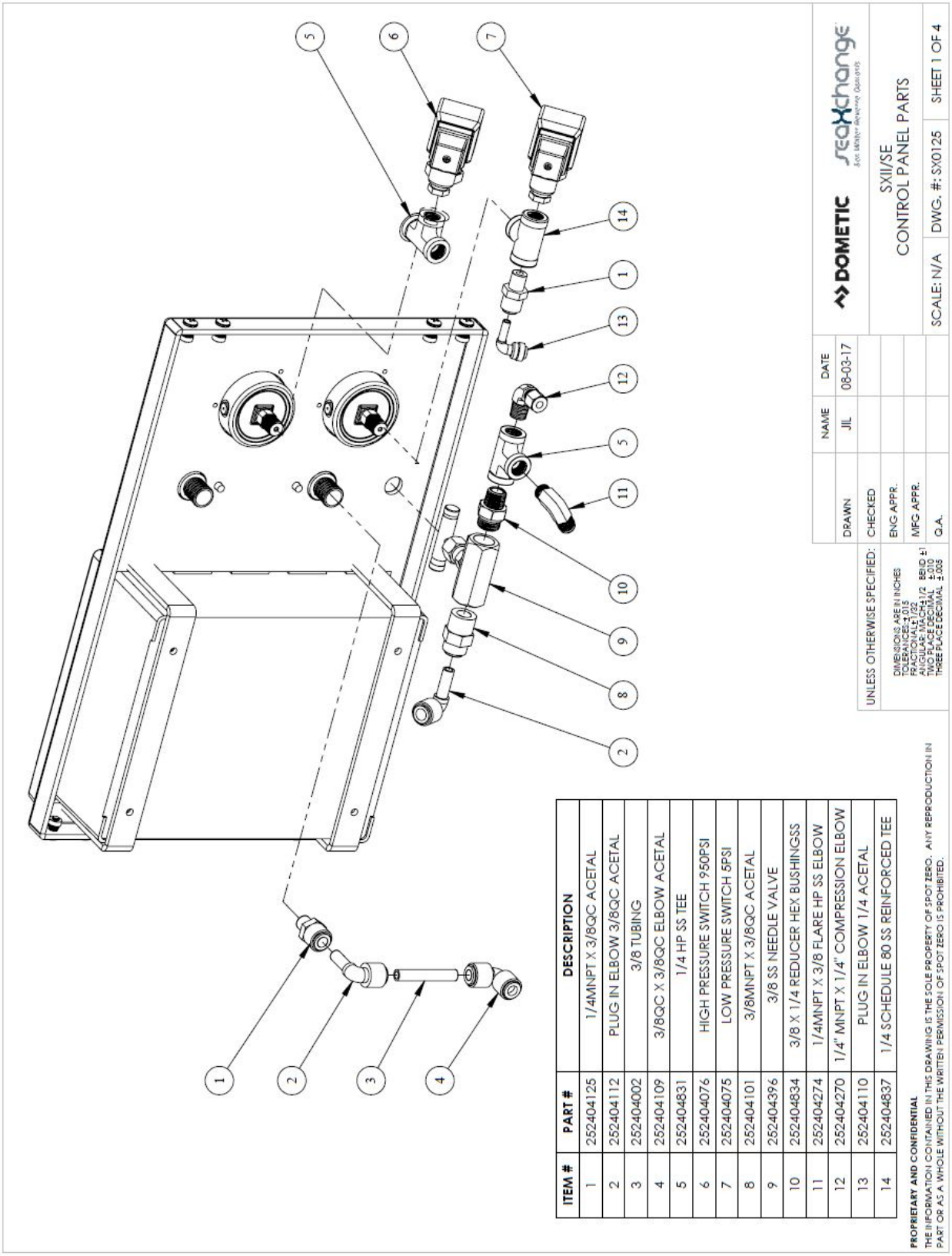

ITEM #	PART #	DESCRIPTION
1	252404125	1/4MNPT X 3/8QC ACETAL
2	252404112	PLUG IN ELBOW 3/8QC ACETAL
3	252404002	3/8 TUBING
4	252404109	3/8QC X 3/8QC ELBOW ACETAL
5	252404831	1/4 HP SS TEE
6	252404076	HIGH PRESSURE SWITCH 950PSI
7	252404075	LOW PRESSURE SWITCH 5PSI
8	252404101	3/8MNPT X 3/8QC ACETAL
9	252404396	3/8 SS NEEDLE VALVE
10	252404834	3/8 X 1/4 REDUCER HEX BUSHINGSS
11	252404274	1/4MNPT X 3/8 FLARE HP SS ELBOW
12	252404270	1/4" MNPT X 1/4" COMPRESSION ELBOW
13	252404110	PLUG IN ELBOW 1/4 ACETAL
14	252404837	1/4 SCHEDULE 80 SS REINFORCED TEE

SE DRAWINGS

CONTROL PANEL

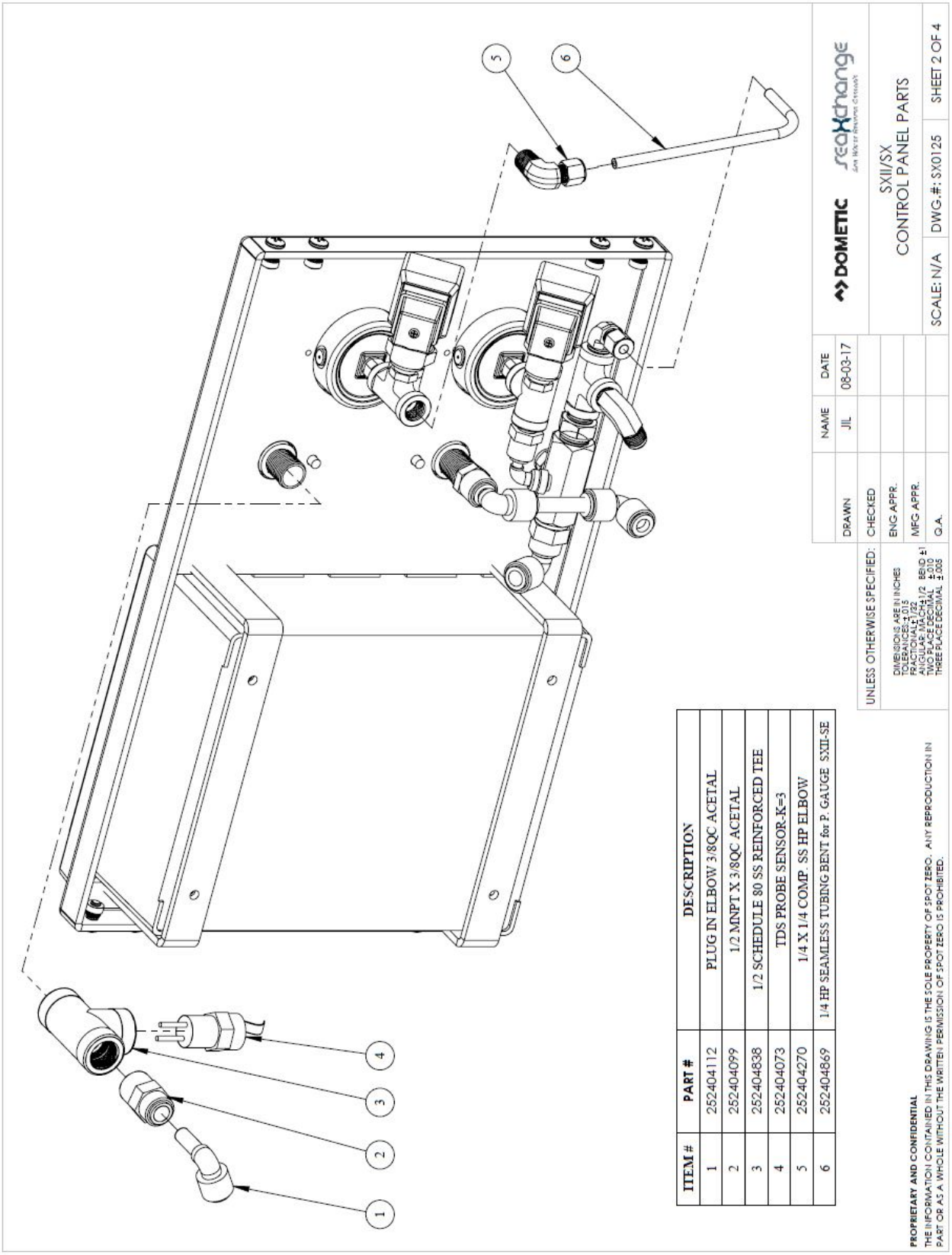

ITEM #	PART #	DESCRIPTION
1	252404112	PLUG IN ELBOW 3/8QC ACETAL
2	252404099	1/2 MNPT X 3/8QC ACETAL
3	252404838	1/2 SCHEDULE 80 SS REINFORCED TEE
4	252404073	TDS PROBE SENSOR-K=3
5	252404270	1/4 X 1/4 COMP SS HP ELBOW
6	252404869	1/4 HP SEAMLESS TUBING BENT for P. GAUGE SXII-SE

SE DRAWINGS

CONTROL PANEL

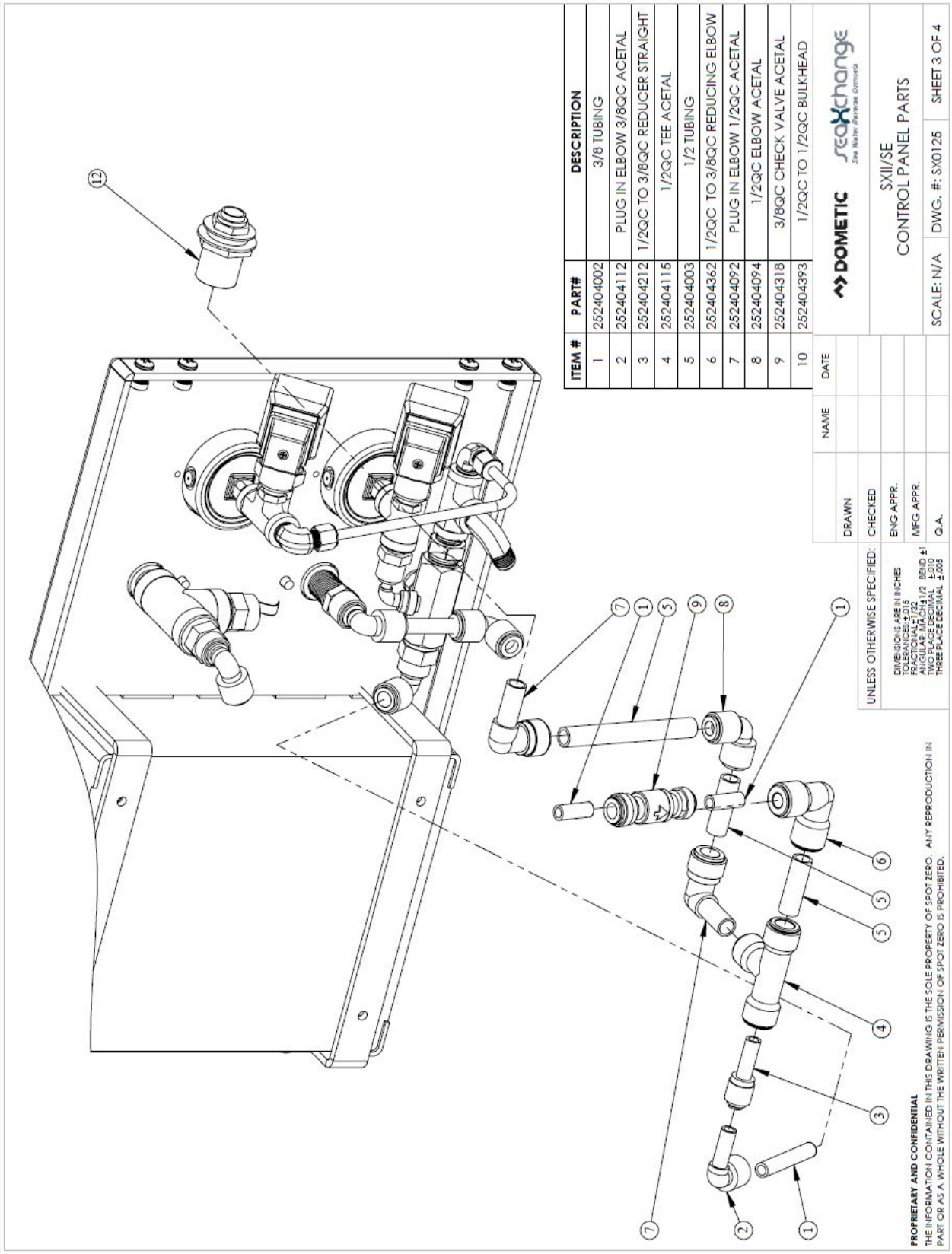

SE DRAWINGS

CONTROL PANEL

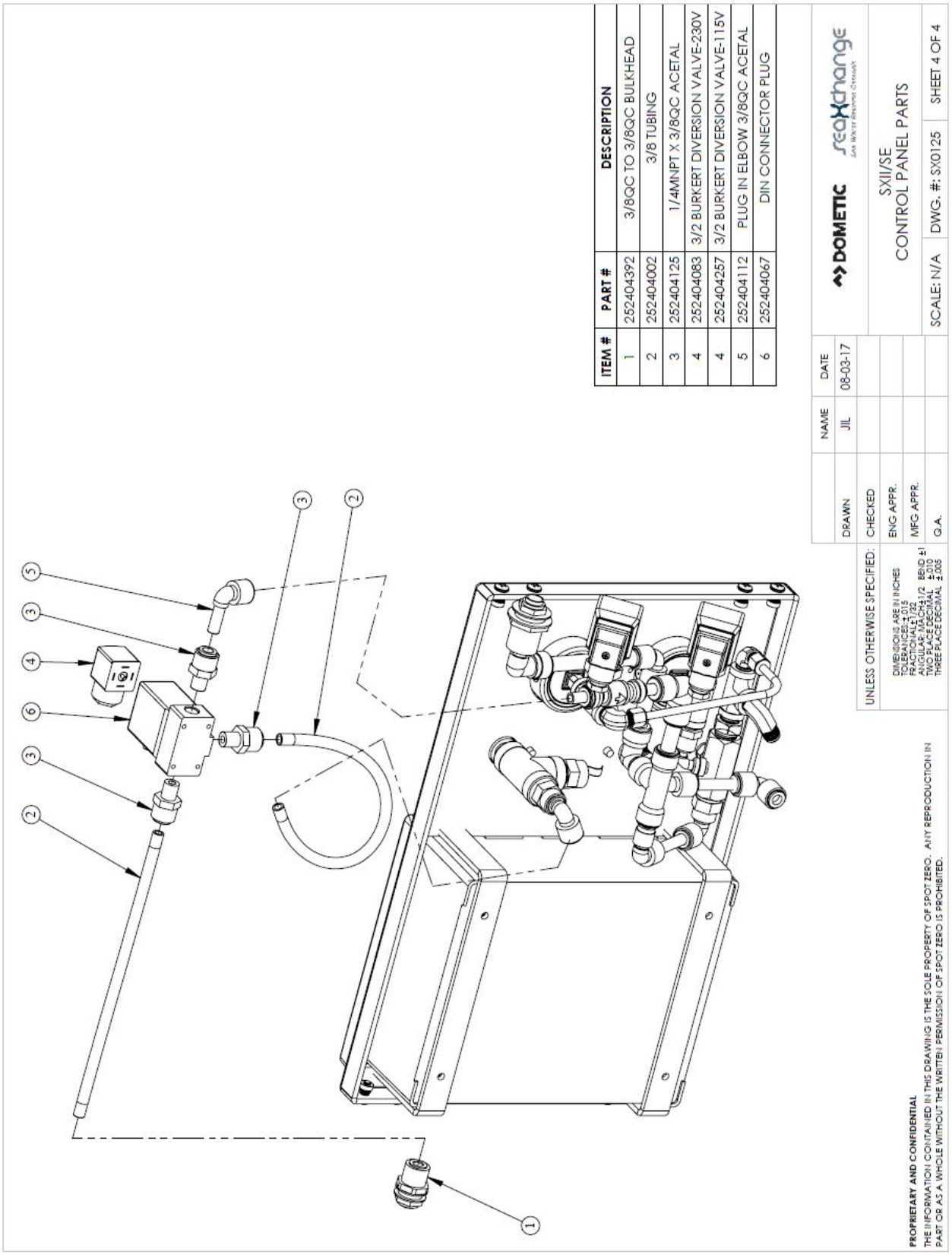

ITEM #	PART #	DESCRIPTION
1	252404392	3/8QC TO 3/8QC BULKHEAD
2	252404002	3/8 TUBING
3	252404125	1/4MNPT X 3/8QC ACETAL
4	252404083	3/2 BURKERT DIVERSION VALVE-230V
4	252404257	3/2 BURKERT DIVERSION VALVE-115V
5	252404112	PLUG IN ELBOW 3/8QC ACETAL
6	252404067	DIN CONNECTOR PLUG

	NAME	DATE
DRAWN	JIL	08-03-17
CHECKED		
ENG APPR.		
MFG APPR.		
Q.A.		

UNLESS OTHERWISE SPECIFIED:
DIMENSIONS ARE IN INCHES
TOLERANCES: ± .015
FRACTIONAL ± 1/32
ANGULAR: MACH ± 1/2 BEND ± 1
TWO PLACE DECIMAL ± .010
THREE PLACE DECIMAL ± .005

DOMETIC seaXchange

SXII/SE
CONTROL PANEL PARTS

SCALE: N/A | DWG. #: SX0125 | SHEET 4 OF 4

PROPRIETARY AND CONFIDENTIAL
THE INFORMATION CONTAINED IN THIS DRAWING IS THE SOLE PROPERTY OF SPOT ZERO. ANY REPRODUCTION IN PART OR AS A WHOLE WITHOUT THE WRITTEN PERMISSION OF SPOT ZERO IS PROHIBITED.

SE DRAWINGS

PRE-FILTER ASSEMBLY

ITEM #	PART #	DESCRIPTION
1	252404854	10-24 X 1/2 PAN SS SCREW
2	252404806	5/16 SS WASHER
3	252404807	5/16 SS LOCK WASHER
4	252404800	5/16 X 1 SS HEX BOLT
5	252404208	1/2 MNPT X 3/4 BARB ELBOW NYLON
6	252404390	1/2 NIPPLE 1.5" THREADED
7	252404324	2.5 X 10 CLEAR HOUSING
8	252404863	DOUBLE PRE-FILTER BRACKET
9	252404110	1/4 PLUG IN ELBOW ACETAL
10	252404100	1/4 MNPT TO 1/4QC CONNECTOR ACETAL
11	252404018	20 MICRON FILTER
12	252404019	5 MICRON FILTER
13	252404127	2.5 x 10 CLEAR HOUSING O-RING
14	252404326	WRENCH FOR 2.5 CELAR HOUSING

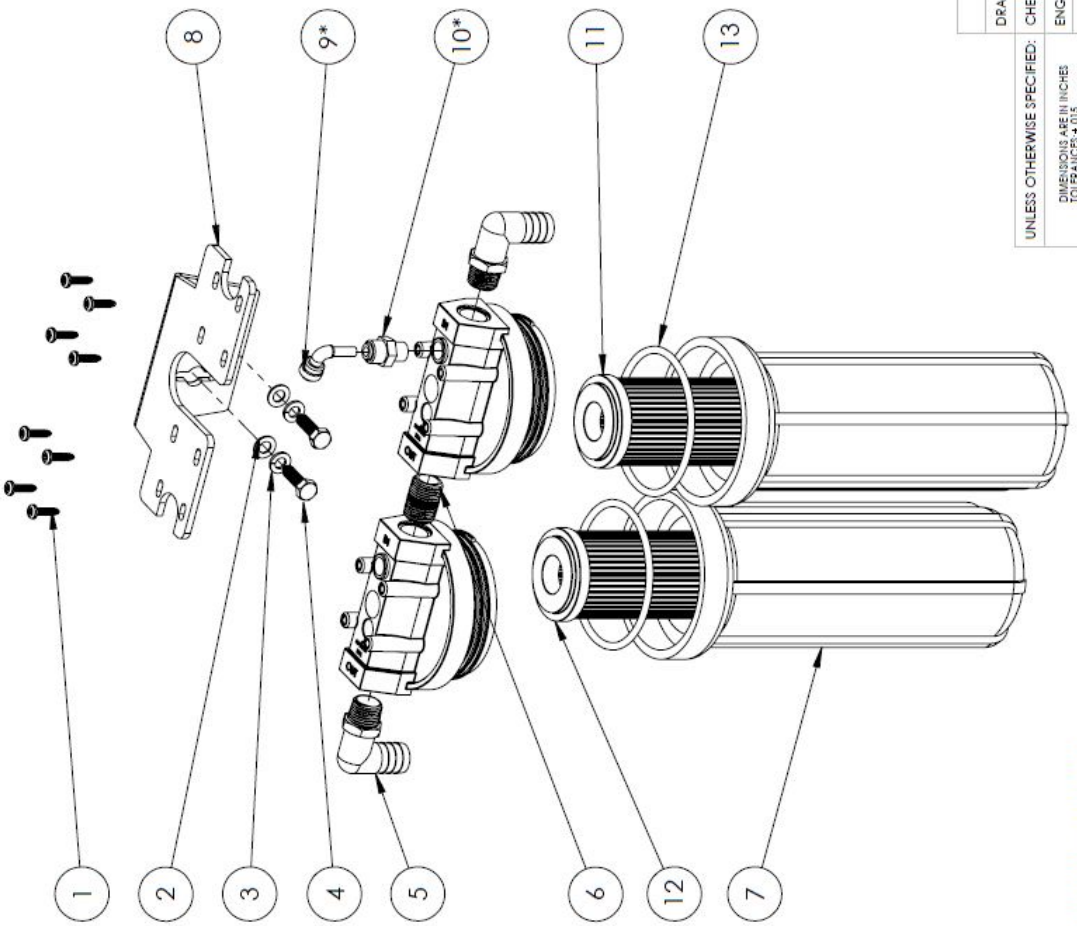

SE DRAWINGS

PRE-FILTER ASSEMBLY

ITEM #	PART #	DESCRIPTION
1	252404324	2.5 X 10 CLEAR HOUSING
2	252404106	3/8 TO 1/4QC STEM REDUCER
3	252404099	1/2 MNPT X 3/8QC CONNECTOR ACETAL
4	252404214	1/2 THREADED NIPPLE
5	252404852	1/2 FNPT REINFORCED ELBOW
6	252404039	SINGLE PRE-FILTER BRACKET
7	252404854	10-24 X 1/2 PAN SS SCREW
8	SEE CHART	2-WAY SOLENOID
9	252404278	DIN CONNECTOR
10	252404127	2.5 CLEAR HOUSING O-RING
11	252404014	CARBON BLOCK FILTER
12	252404800	5/16 X 1 SS HEX BOLT
13	252404807	5/16 SS LOCK WASHER
14	252404806	5/16 SS WASHER
15	252404217	1/2 SPRING CHECK VALVE
16	252404326	WRENCH FOR 2.5 CELAR HOUSING
17	252404375	WATER RESTRICTOR 1.0

2-WAY SOLENOID		
SYSTEM VOLTAGE	SYSTEM MODEL	PART #
115V	SE/SXII	252404256
230V	SE/SXII	252404074
24V	XTC/XZ	252404397

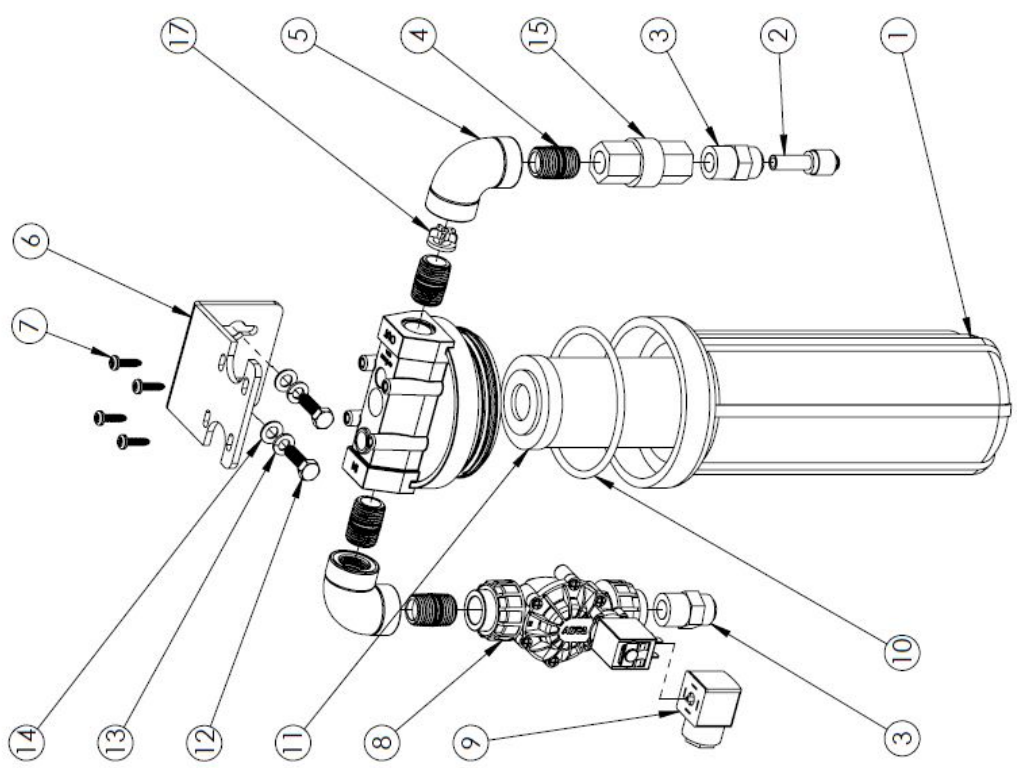

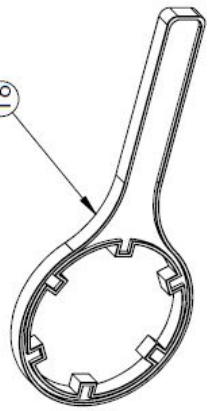

	NAME	DATE
DRAWN	JIL	08-03-17
CHECKED		
ENG APPR.		
MFG APPR.		
Q.A.		

UNLESS OTHERWISE SPECIFIED:
DIMENSIONS ARE IN INCHES
TOLERANCES:
FRACTIONAL ±1/32
ANGULAR: MACH ±1/2 BEND ±1
TWO PLACE DECIMAL ±.010
THREE PLACE DECIMAL ±.005

DOMETIC | seaXchange

SXII/XTC/SE
FRESH WATER FLUSH SUB ASSY

SCALE: 1:8 | DWG. #: SX0042 | SHEET 1 OF 1

PROPRIETARY AND CONFIDENTIAL
THE INFORMATION CONTAINED IN THIS DRAWING IS THE SOLE PROPERTY OF SPOT ZERO. ANY REPRODUCTION IN PART OR AS A WHOLE WITHOUT THE WRITTEN PERMISSION OF SPOT ZERO IS PROHIBITED.

PART 6: MANUFACTURERS INDEX

This Page Intentionally Left Blank

WATERMAKER SYSTEM CONTROLLER

Watermaker System

Controller Documentation

Table of Contents

Description	Page
Specifications: Table 1	3
Terminal Board Schematic: Figure 1	4
Controller Overview: Figure 2	5
Controller Detail, CPU-4 & LP-4: Figure 3	6
Controller Detail, TB-4: Figure 4	7
Conductivity Probe Installation: Figure 5	8
Controller Programming, Internal Menus: Figure 6	9
Controller Factory Default Settings	10
Controller Fault Conditions	11

Table 1. Specifications

Inputs	
Tank level switches	(2) Normally-Closed. *Can be used with a single level switch.*
Start/Stop	Momentary contact, normally open (RJ45 connector, 8 conductor)
Pretreat lockout switch	Normally-Open.
High Pressure switch	Normally-Open.
Controller Power	110/240 VAC, 60/50Hz
Permeate Conductivity	0-3000 PPM, 0-6000 µs (standard sensor, CP-1, K=.75)
Feed Conductivity	not applicable on Seawater

Output Relay Ratings *(relays are fused with a 6A fuse)*	
Feed Valve (Boost Pump Coil)	1A @ 250VAC (with NO and NC contacts for motorized valves)
Flush Valve	1A @ 250VAC.
Divert Valve	1A @ 250VAC (with NO and NC contacts)
Alarm	1A @ 250VAC
HP Pump Motor Coil	1A @ 250VAC

Circuit Protection				
Main Power Fuse	F1	6 Amp	5x20mm	LittelFuse 0234.006 or Buss GMC-6R
Power Supply Fuse	F2	1/4 Amp	5x20mm	LittelFuse 0218.250

Other	
Dimensions	10.5" tall, 9.5" wide, 5.0" deep. Nema 4X non-metallic (10x8x4)
	12.5" tall, 11.25" wide, 7.0" deep. Nema 4X non-metallic (12x10x6)
	14.5" tall, 13.5" wide, 7.0" deep. Nema 4X non-metallic (14x12x7)
Weight	4.2 lb. (10.5x9.5) *(Enclosure, CPU-4 and TB-4 only.)*
	6.0 lb. (12.5 x 11.25) *(Enclosure, CPU-4 and TB-4 only.)*
	10.6 lb. (12.5 x 11.25) *(Enclosure, CPU-4 and TB-4 only.)*
Environment	0-50°C, 10-90%RH (non-condensing)

Figure 1. Terminal Board Schematic

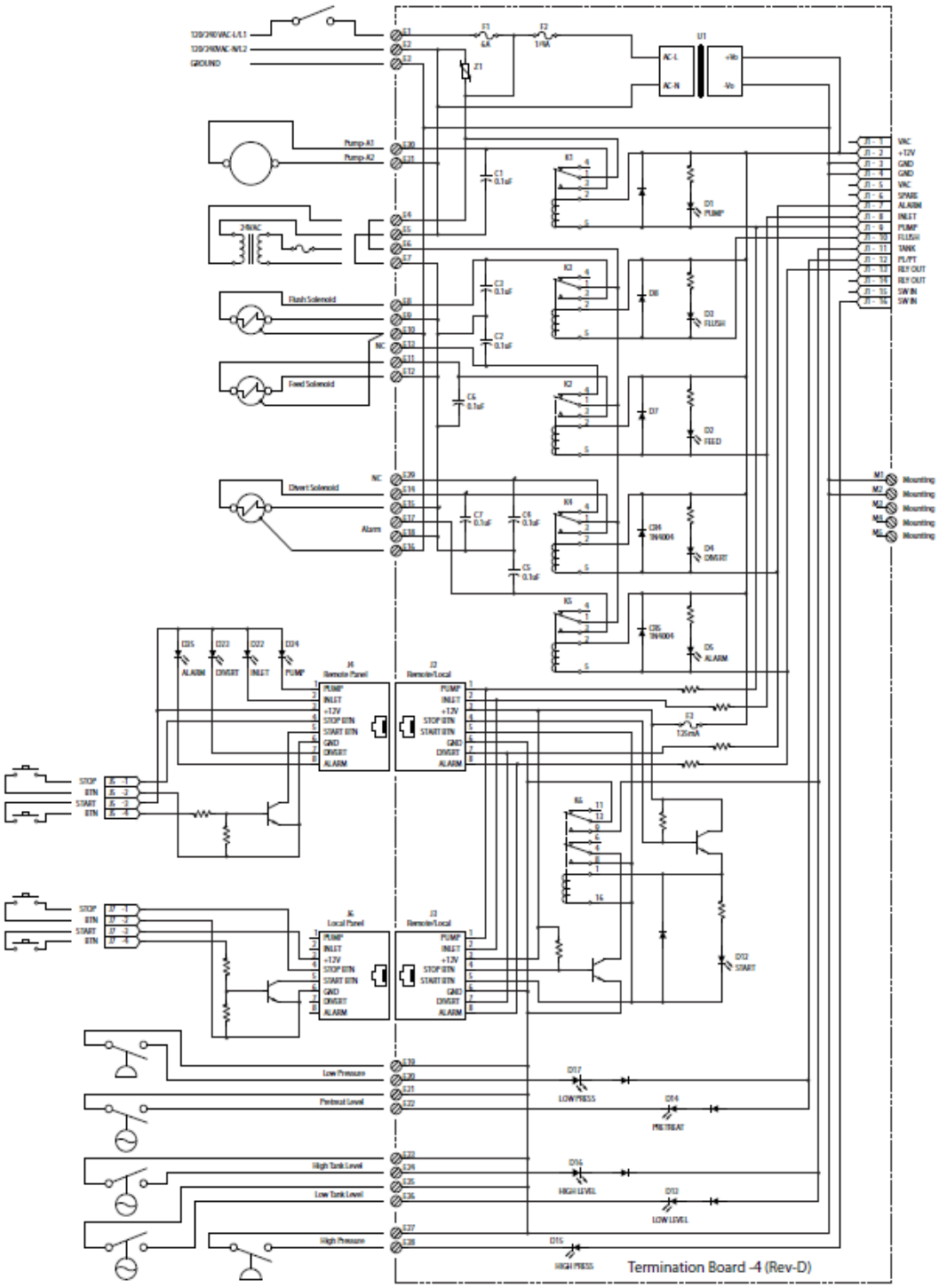

Rev 4-10-2017 4

Figure 2. Controller Overview

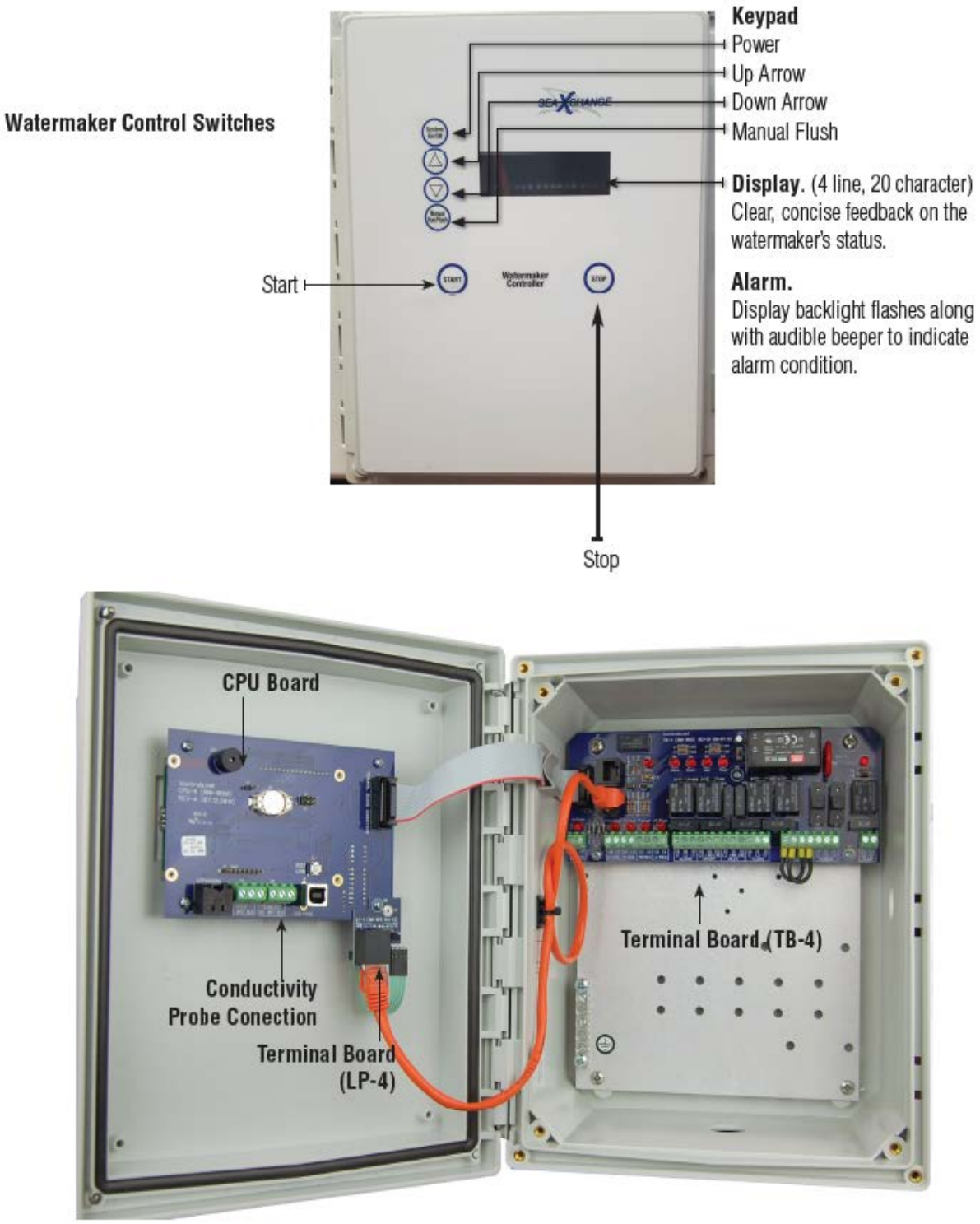

Rev 4-10-2017 5

Figure 3. Controller Detail: CPU-4/LP-4

Typical Configuration

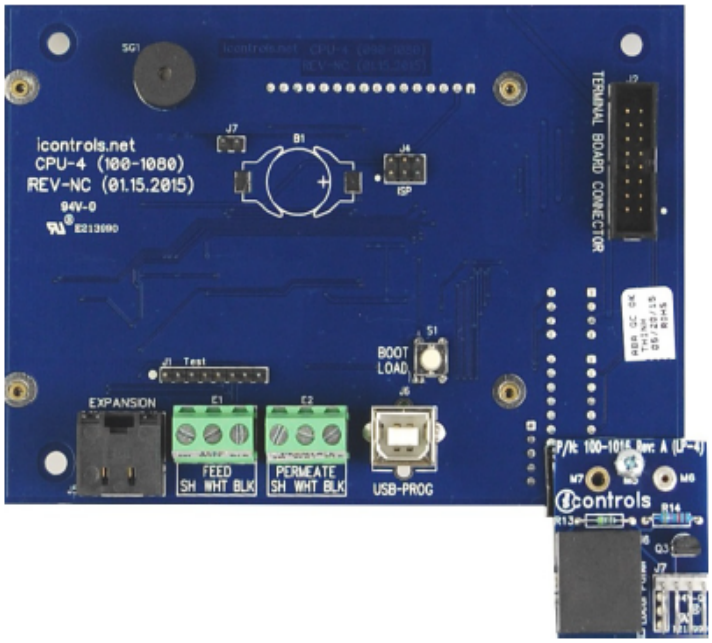

Detailed View

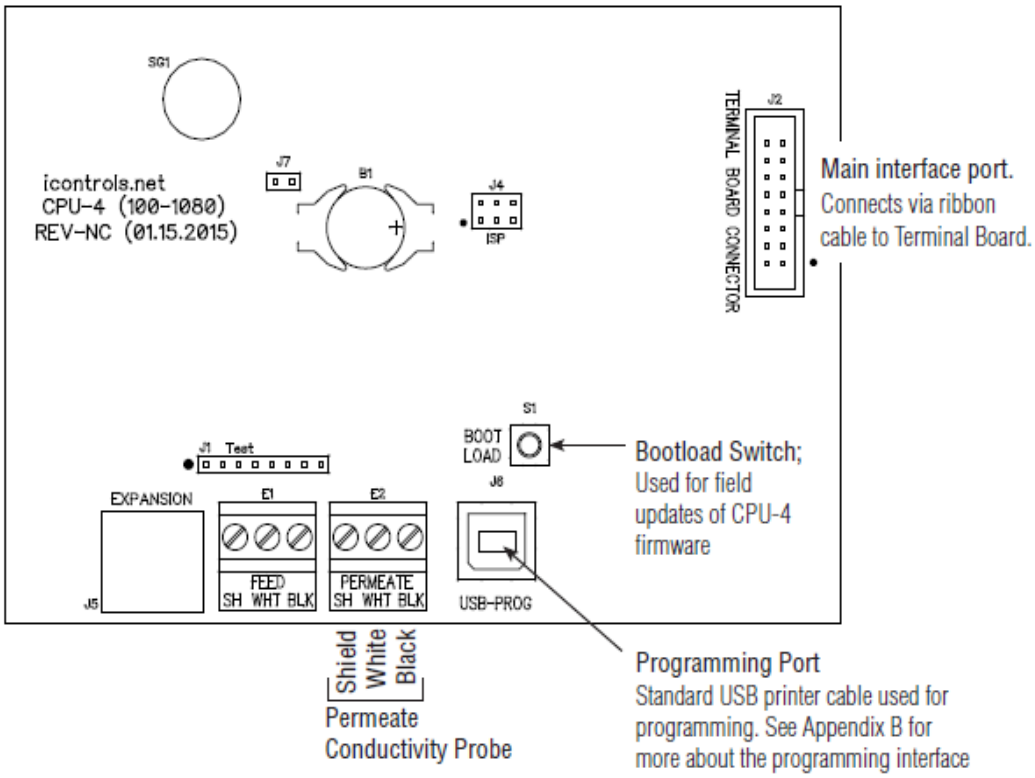

Rev 4-10-2017 6

Figure 4. Controller Detail: Terminal Board, TB-4 (See Fig. 1 for schematic)

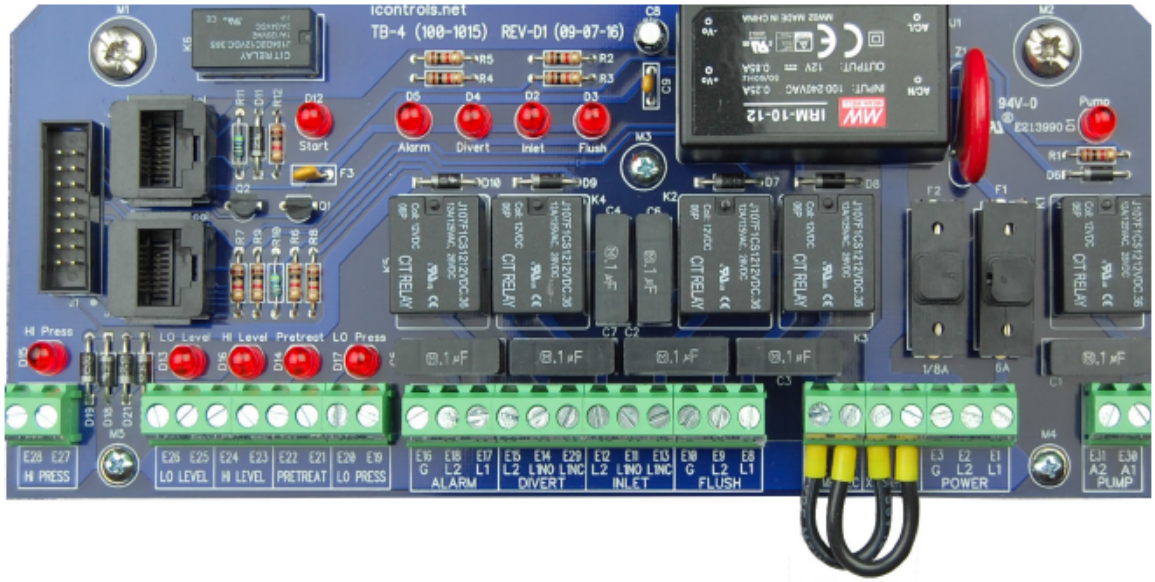

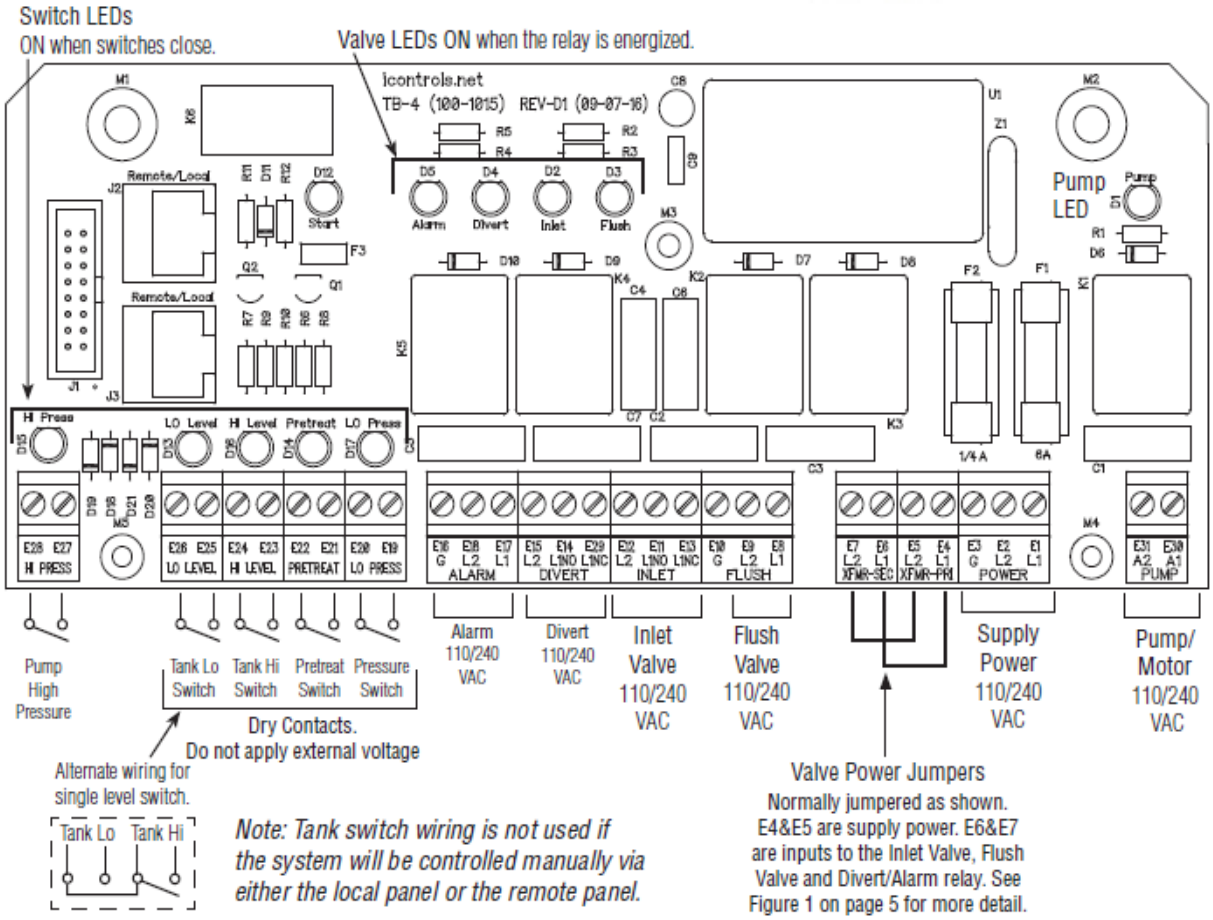

Note: Tank switch wiring is not used if the system will be controlled manually via either the local panel or the remote panel.

Rev 4-10-2017 7

Figure 5. Conductivity Probe Installation

Conductivity Probe Calibration

Because the conductivity measurement is affected by the physical envioronment in which it operates, it is best to calibrate while installed in the system and operating under normal conditions. This requires an external conductivity measurement device that is known to be accurate to serve as a reference.

1. Operate the RO long enough for the membranes, operating temperature and permeate conductivity reading to stabilize.
2. Take a sample of the permeate and measure it with the reference meter.
3. See Figure 7 for instructions on how to access the Permeate Calibration Menu.
4. Enter the Permeate Calibration menu and use the UP or Down arrow until the value on the controller matches the value obtained on the reference meter.
5. Exit and Save the calibration.
6. The same procedure applies to the Feed Probe calibration.

NOTE: The probe calibration must be performed using solutions with conductivity of less than 900 ppm or µs. The conductivity calibration circuit will behave erratically if you attempt to calibrate using a higher value. When using a standard calibration solution, the NaCl PPM value can be used in place of the µs value if desired.

Figure 6. Controller Programming. Accessing the hidden menus.

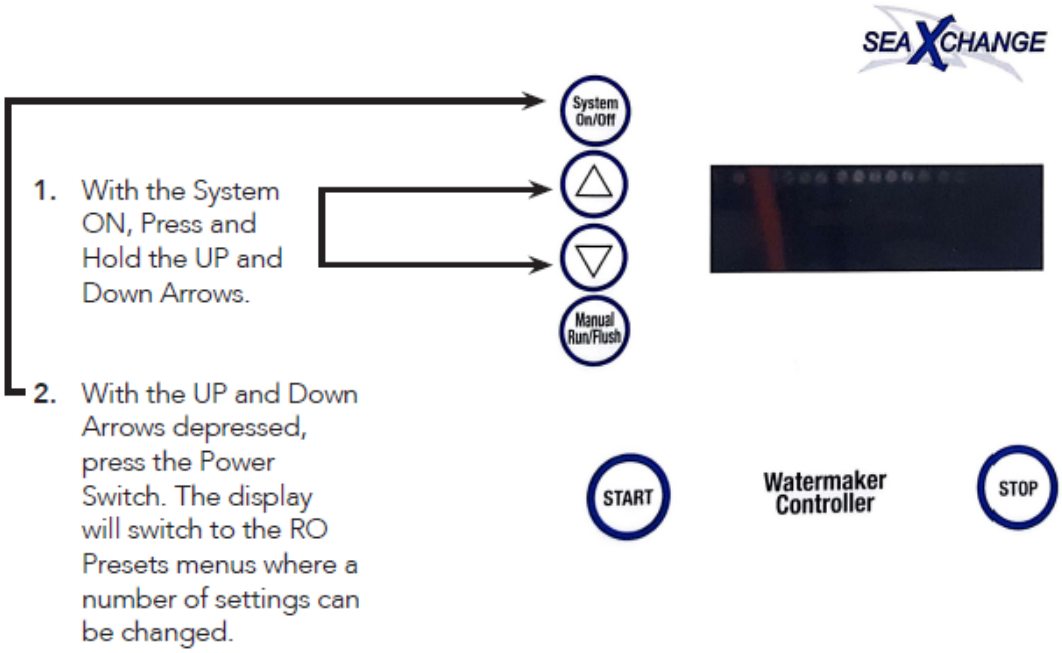

1. With the System ON, Press and Hold the UP and Down Arrows.
2. With the UP and Down Arrows depressed, press the Power Switch. The display will switch to the RO Presets menus where a number of settings can be changed.

Rev 4-10-2017 9

Figure 7. Controller Programming: Menu Navigation

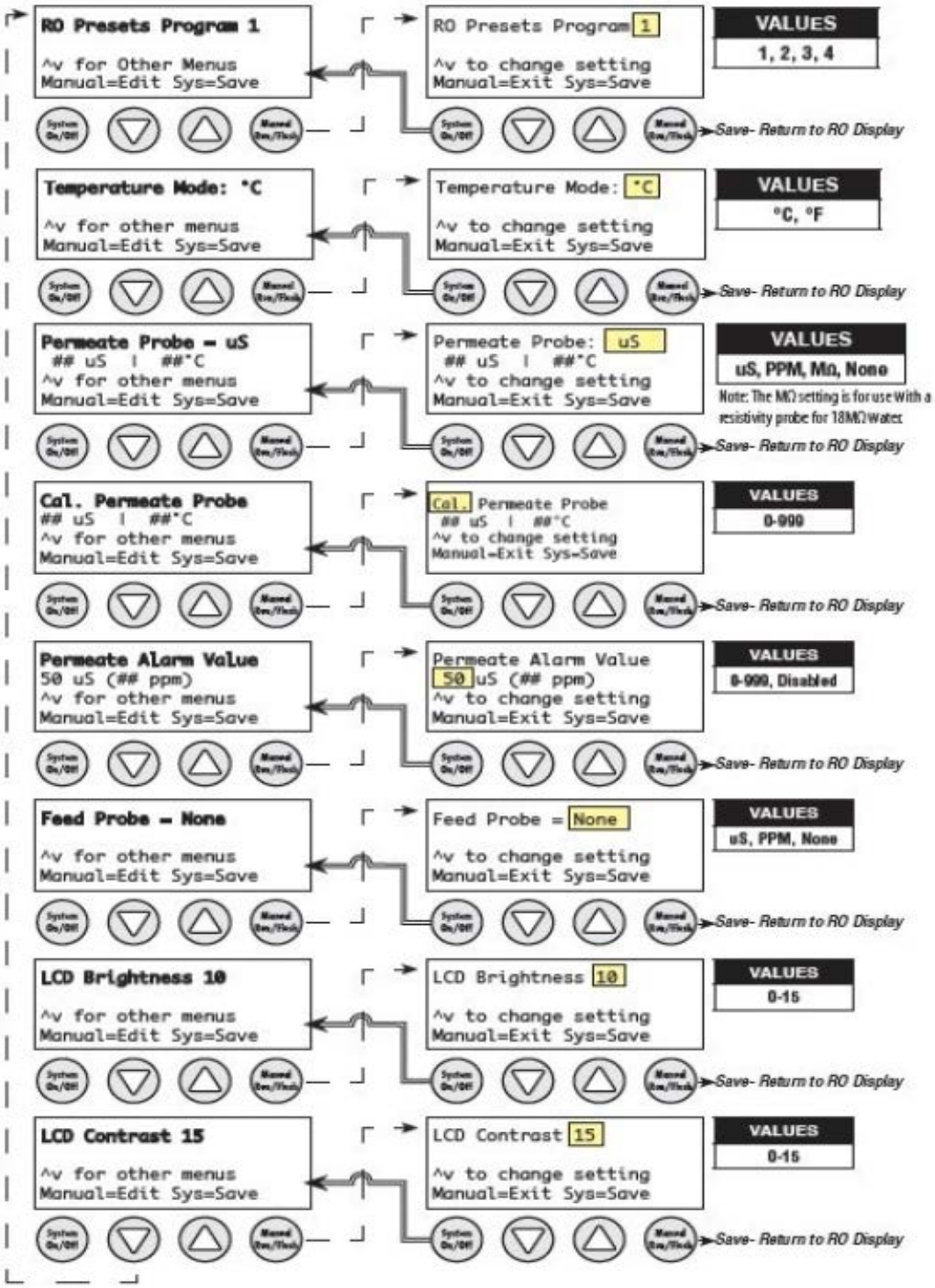

Controller Fault Condition Displays

Below are examples and explanations of the displays which accompany the fault conditions possible in the ROC-3. Fault conditions always indicated a problem of some sort which requires corrective action. the displays provide sufficient information to recognize the source of the fault and the required corrective action.

High Pressure Fault: *(Occurs when High Pressure Switch Closes)*
Line 1 "Service Fault"
Line 2 "High System Pressure"
Line 3
Line 4 "To Reset Push OFF/ON"

Low Pressure Fault: *(System is responding to low pressure condition per system settings)*
Line 1 "Service Fault"
Line 2 "Low Feed Pressure"
Line 3
Line 4 "Restart in MM:SS"

Pre Treat Fault: *(Pretreat Switch is closed indicating problem with pretreat system).*
Line 1 "Service Fault"
Line 2 "Pretreat"
Line 3
Line 4 "Check Pretreat Sys."

Permeate Conductivity Fault: *(Permeate conductivity is higher than the alarm setpoint.)*
Line 1 "Service Fault"
Line 2 "Permeate TDS xxx ppm" or "Permeate Cond xxx uS"
Line 3 "Alarm SP xxx ppm" or "Alarm SP xxx uS"
Line 4 "To Reset Push OFF/ON"

Feed Conductivity Fault: *(Feed conductivity is higher than the alarm setpoint.)*
Line 1 "Service Fault"
Line 2 "Feed TDS xxx ppm" or "Feed Cond xxx uS"
Line 3 "Alarm SP xxx ppm" or "Alarm SP xxx uS"
Line 4 "To Reset Push OFF/ON"

Conductivity Probe Error messages:
Line 2 "Over-range" - Measurement is out of range for the circuit, probe may also be shorted
Line 2 "Probe shorted" - Short circuit detected on temperature sensor in probe
Line 2 "Probe not detected" - Open circuit detected on temperature sensor in probe
Line 2 "Probe Startup 1" - Internal reference voltage too high to make valid measurement
Line 2 "Probe Startup 2" - Internal reference voltage too low to make valid measurement
Line 2 "Probe Startup 3" - Internal excitation voltage too high to make valid measurement
Line 2 "Probe Startup 4", - Internal excitation voltage too low to make valid measurement

GENERAL HIGH PRESSURE PUMP

TRIPLEX

GENERAL PUMP *A member of the Interpump Group*

WM Series

Stainless Steel Triplex Plunger Pump

SERVICING INSTRUCTIONS

SERVICING PUMP PROCEDURES

Valve Replacement: All inlet and discharge valves can be serviced without disrupting the inlet or discharge plumbing.

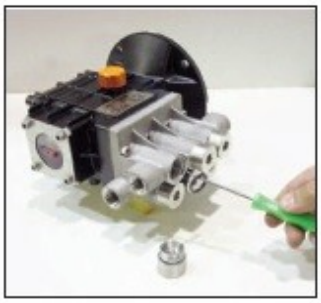

To service any valve:

1) Using a 3/8" allen wrench, remove valve cap. Examine threads and o-ring. Replace o-ring if there is any evidence of cuts, abrasions, distortion or wear.

2) Remove valve assembly (retainer, spring, valve, valve seat) from valve cavity.

3) Remove valve seat o-ring from valve cavity.

4) Inspect manifold for wear or damage.

5) Install new o-ring in valve cavity.

6) Insert valve assembly into valve cavity.

7) Coat the threads of the valve cap with Loctite anti-seize 77164 and reinstall valve cap. Torque to 10.8 Nm (8.0 Ft-Lbs).

NOTE: Only one valve kit is necessary to repair all the valves in the pump. The kit includes new o-rings, valve seat, poppet, spring and retainer. All are pre-assembled.

Ref 300789 Rev.C
04-16

General Pump
is a member of
the Interpump Group

GENERAL PUMP

TRIPLEX

WM Series
Servicing Instructions

GENERAL PUMP *A member of the Interpump Group*

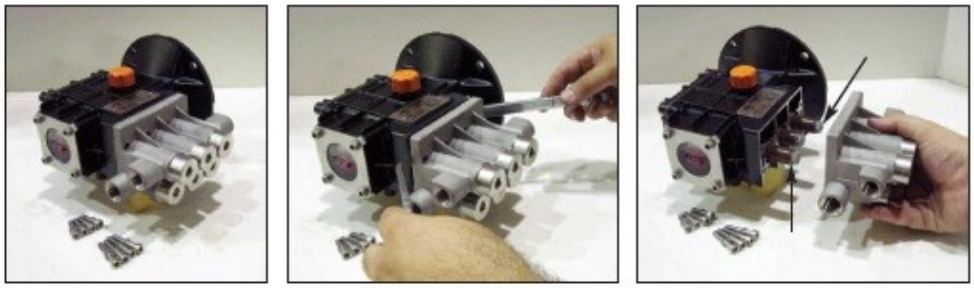

Replacing packings using kit WM02:

1) Remove head bolts using 5mm hex wrench and slide manifold away from crankcase. (It is normal for some packing assemblies to remain on the plungers).

   Note: it may be necessary to rotate crankshaft and/or use pry bars to separate manifold from crankcase.

2) Inspect plungers for cracks, scoring or build up and replace/clean as needed.

3) Insert 18 mm extractor collet through seal retainer. Tighten collet and extract packing assembly from manifold. Clean and inspect cavity for unusual wear, cracks, etc.

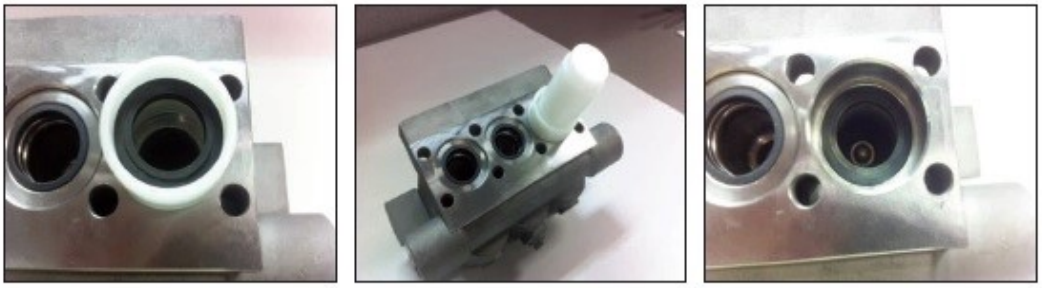

4) **Note:** do not grease any portion of the packing assembly during this process. Set high pressure seal insertion collar in manifold cylinder. Assemble Glyd rings (positions 5 & 6) and gently place inside cylinder tool so they are resting evenly. Insert pusher tool and firmly press down to set packing in manifold.

Ref 300789 Rev.C
04-16

5) Set insertion collar over seal casing (position 4) and ensure recess for seal is facing upwards. Gently place low pressure sea (position 2) into collar ensuring the spring side of the seal is facing downward and resting evenly. Insert pusher tool into collar and firmly press down to set seal in casing.

6) Install o-ring (position 3) so it's properly seated in the middle groove on the casing groove that doesn't have through holes. Installation in the wrong groove will impede the flow of cooling water resulting in premature seal failure.

7) Place seal case into manifold cylinder with low pressure seal facing upwards. Firmly press into cylinder until properly seated and repeat for each cylinder.

8) Rotate crankshaft so center plunger is furthest forward.

9) Slide seal retainer ring over the plunger until seated in crankcase. Ensure o-ring (position 3) is positioned so crankcase opening will receive aligned portion.

   Note: a small amount of silicone grease on the back side of the retainer ring will help secure it in place.

10) Slide manifold assembly on to center plunger first, then align to outer plungers while pushing towards crankcase. **Note:** a pair of make shift 6mm alignment pins will minimize chance of seal damage at this point, see illustration for details.

11) Once manifold is properly seated, install head bolts and begin torque sequence as illustrated. Tighten to 10.8Nm or 8.0 Ft-lbs.

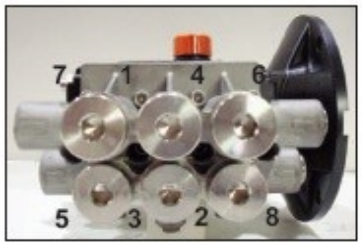

Recommended Tools/Supplies:

100783 Complete Extraction Kit
Includes the following tools:

2530016	*handle*	2530020	*15mm sleeve*
2530017	*bolt*	2530021	*18mm sleeve*
2530018	*pin*		

100295 General Pump Series 100 Oil (1-16 oz. bottle)
100214 General Pump Series 100 Oil (6-16oz. bottles)
100216 General Pump Series 100 Oil (24-16 oz. bottles)
100278 General Pump general packing lubricant
Loctite 77164
Loctite 243

Ref 300789 Rev. C
04-16

TROUBLESHOOTING

PROBLEM	CAUSE	REMEDY
Pulsation	Valve stuck open.	Check all valves, remove foreign matter.
	Faulty pulsation damper.	Check precharge; if low, recharge it or install a new one.
Low pressure	Worn nozzle.	Replace nozzle, of proper size.
	Belt slippage.	Tighten or replace; use correct belt.
	Air leak in inlet plumbing.	Disassemble, reseal and reassemble.
	Relief valve stuck; partially plugged or improperly adjusted valve seat worn.	Clean, adjust relief valve; check for worn and dirty valve seats. Kit available.
	Inlet suction strainer clogged or improperly sized.	Clean. Use adequate size. Check more frequently.
	Worn packing. Abrasives in pumped fluid or severe cavitation. Inadequate water.	Install proper filter. Suction at inlet manifold must be limited to lifting less than 20 feet of water or -8.5 PSI vacuum.
	Fouled or dirty inlet or discharge valves.	Clean inlet and discharge valve assemblies.
	Worn inlet, discharge valve blocked or dirty.	Replace worn valve seats and/or discharge hose
	Leaky discharge hose.	
Pump runs extremely rough, pressure very low.	Restricted inlet or air entering the inlet plumbing.	Proper size inlet plumbing; check for air tight seal
	Inlet restrictions and/or air leaks. Stuck inlet or discharge valve.	Replace worn cup or cups, clean out foreign material, replace worn valves.
Water leakage from under manifold. Slight leakage.	Worn packing.	Install new packing.
	Cracked plunger.	Replace plunger(s).
Oil leak between crankcase and pumping section.	Worn crankcase piston rod seals. O-rings on plunger retainer worn.	Replace crankcase piston rod seals. Replace o-rings.
Oil leaking in the area of crankshaft.	Worn crankshaft seal or inproperly installed oil seal o-ring.	Remove oil seal retainer and replace damaged o-ring and/or seals.
	Bad bearing.	Replace bearing and any spacer or cover damaged by heat.
Excessive play in the end of the crankshaft pulley.	Worn main bearing from excessive tension on drive belt.	Replace crankcase bearing and/ or tension drive belt.
Water in crankcase.	May be caused by humid air condensing into water inside the crankcase	Change oil intervals. Use General Pump SAE 30 non-detergent oil.
	Worn packing and/or piston rod sleeve, o-rings on plunger retainer worn.	Replace packing. Replace o-rings.
	Cracked plunger	Replace plunger(s).
Oil leaking from underside of crankcase.	Worn crankcase piston rod seals.	Replace seals.
	Scored piston rod.	Replace piston rod.
Oil leaking at the rear portion of the crankcase.	Damaged crankcase, rear cover o-ring, drain plug o-ring, or sight glass o-ring.	Replace cover o-ring, drain plug o-ring, or sight glass o-ring.
Loud knocking noise in pump.	Pulley loose on crankshaft.	Check key and tighten screw.
	Broken or worn bearing on rod(s).	Replace bearing or rod(s).
	Valve stuck open or shut, or not opening enough.	Replace bad valve.
Frequent or premature failure of the packing.	Scored, damaged or worn plunger.	Replace plungers.
	Overpressure to inlet manifold.	Reduce inlet pressure.
	Abrasive material in the fluid being pumped.	Install proper filtration on pump inlet plumbing.
	Excessive pressure and/or temperature of fluid being pumped.	Check pressures and fluid inlet temperature; be sure they are within specified range.
	Overpressure of pump.	Reduce pressure.
	Running pump dry.	Do not run pump without water.
	Upstream chemical injection.	Use downstream chemical injection.

GENERAL PUMP *A member of the Interpump Group*

WM SERIES

MAINTENANCE LOG

	HOURS & DATE						
OIL CHANGE Change oil after first 50 hours of pump operation, then every 300 hours, or every 3 months, thereafter. (Depending on conditions.)							
GREASE							
PACKING REPLACEMENT							
PLUNGER REPLACEMENT							
VALVE REPLACEMENT							

GENERAL PUMP

GP Companies, Inc.
1174 Northland Drive
Mendota Heights, MN 55120
Phone: 651.686.2199 Fax: 800.535.1745
www.generalpump.com email: sales@gpcompanies.com

Ref 300789 Rev.B
03-15

PRICE® BOOSTER PUMP

Price® Pump Co.

INSTALLATION, OPERATING AND MAINTENANCE MANUAL

TYPE HP CENTRIFUGAL PUMPS

MODELS: HP75 CN/CS, BN/BS, KN/KS, NN
HP75 SS/SC, AB
HP100 SS/SC, AB

PLEASE FILL IN FROM PUMP NAMEPLATE

Pump Model_____

BOM. No._____

Serial No._____

RETAIN MANUAL FOR REFERENCE

Price® Pump Company
21775 8th. Street East
Sonoma, CA 95476
Tel: 707-938-8441
Fax 707-938-0764
Email: sales@pricepump.com

IN158-HP rev. H

Congratulations

You are now the owner of a Price® Pump Co. Centrifugal Pump. This pump was carefully inspected and subjected to final performance evaluation before being released for shipment. In order to achieve maximum performance and reliability, please follow the simple instructions in this manual.

RECOMMENDED PRECAUTIONS

1. For satisfactory operation and safety, maximum system pressure must not exceed 350 psi* (24.6kg/sq cm).

2. For satisfactory operation and safety, maximum fluid temperature must not exceed 300 °F* (121°C).

3. No modifications, additions or deletions should be made to the pump without prior approval of the factory.

4. Drain pump completely and flush with water before servicing a pump handling volatile or harmful liquids.

READ CAREFULLY THE CAUTION BELOW

The performance of your Price® Pump Co. Centrifugal Pump is based on clean, room temperature, water with suction conditions as shown on the performance curves. If used to pump liquids other than water , pump performance may differ from rated performance based on the different specific gravity, temperature, viscosity, etc. of the liquid being pumped. A standard pump, however, may not be safe for pumping all types of liquids, such as toxic, volatile or chemical liquids, or liquids under extreme temperatures or pressures.

Please consult Price® Pump Co. technical specifications as well as local codes and general references to determine the appropriate pump for your particular application. Since it is impossible for us to anticipate every application of a Price® Centrifugal pump, if you plan to use the pump for a non-water application, contact Price® Pump Co. beforehand to determine whether such application may be appropriate and safe under the operating conditions. Failure to do so could result in property damage or personal harm.

* Depends on seal materials and seal type

Visit our website for product information and technical support

www.pricepump.com

INSTALLATION / OPERATING INSTRUCTIONS
CENTRIFUGAL PUMPS

Warning

Before installing, repairing or performing maintenance on this pump, read these instructions completely.

Disconnect power to pump before servicing to avoid dangerous or fatal electrical shock.

Match supply voltage and frequency to motor nameplate values. Incorrect voltage can cause fire or serious motor damage and void warranty.

Ground motor before connection to electrical power supply! Failure to ground motor can cause severe or fatal electrical shock!

Do not ground to gas supply line!

Before disassembling pump, be certain all liquid has been removed. If pump was used to pump hazardous or toxic fluid, it must be decontaminated prior to disassembly.

Close Coupled Motor Pumps

It is suggested that these pumps be firmly bolted to a level surface. Adequate air movement around motor will help prevent overheating.

Do not over tighten inlet and outlet piping or volute may be damaged.

Power Frame Mounted Pumps

Power Frame mounted pumps must be mounted on a rigid base that will not warp or flex. Each pump must be mounted such that the pump shaft centerline is in-line with the driver shaft centerline. Pads and/or shims will be required on the pump, the driver or both to insure proper alignment. The two shafts should not touch each other (end to end) and the distance between them depends on the coupling used to connect them.

Misalignment will cause vibration, bearing failure and void warranty. Pumps are rough aligned at the factory but must be realigned after shipment and installation.

Pulley driven pump must have pulleys inline and proper belt tightness practices followed.

Direction of Rotation

Note: Motor shaft rotation is viewed from the suction end of pump. A rotational arrow is shown on the front of the pump volute casing. Incorrect rotation can cause pump damage, failure or reduced performance, voiding warranty. It is best to check rotation by momentarily energizing or jogging the motor prior to filling pump with liquid.

Warning! Do not operate pump without liquid as damage may result to the pump internal wear surfaces.

Plumbing

All piping needs to be supported independently of the pump. Piping connections should not exert any stress on the pump volute or fittings.

Suction Piping (Inlet)

(Horizontal Pumps)

Suction line must provide adequate suction pressure and even (Laminar) liquid flow for proper pump operation. Air, entrapped in the suction line due to leaks or improper piping design, may cause the pump to lose prime. Non-priming pumps must have their suction 'flooded' at start up (see datasheets for minimum NPSHR). Also, the suction line must provide sufficient pressure (NPSH) and even flow to pump inlet to prevent pump cavitation. The suction pipe entering the pump should be straight and a minimum length of 5 times and preferably 10 times the pump inlet diameter. Elbows, fittings or valves installed close to the pump inlet can disrupt liquid flow and cause cavitation. Suction lines must be at least the same diameter as the pump inlet or larger if possible.

Price Pump Company recommends against using foot valves in the suction line to maintain liquid in the pump when it's not operating. If foot valves are used, due to suction lift conditions, they must be properly maintained to avoid leaks resulting from wear or fouling. Suction piping must be designed to prevent vapor from being trapped in high spots in the piping. This condition may cause the pump to vapor lock.

Discharge Piping (Outlet)

To control flow and discharge head, it is advisable to install a valve (globe, ball, or other adjustable and non-leak type) in the discharge line adjacent to the pump. The valve may be closed during system repairs to prevent backflow. By installing a check valve in the discharge line, backflow can also be prevented during maintenance or during periods of pump stoppage.

Operation

All centrifugal pumps must be filled with liquid prior to start up. It is suggested that during initial start up the discharge valve be closed and then opened as the motor reaches full rpm's. If pump does not build up pressure as motor speed increases, shut down and make sure that liquid flow into pump is not restricted (see "Troubleshooting").

Note: A centrifugal pumps flow rate and head (pressure) will vary with the amount of resistance (pipe friction and flow restrictions) in the discharge line. As the valve on the discharge line opens, the flow rate and motor amperes draw will increase and head (pressure) will decrease. As the valve on the discharge line is closed, the flow rate and amperes draw will decrease and the head (pressure) will increase.

If resistance in the discharge line is not sufficient, the pump will operate at a condition of maximum flow, sometimes called "end of curve" performance. Maximum horse-power is required to operate at this point and motor overload may result. If excessive amperes draw and motor overload is occurring, reduce the system flow rate by installing a valve or orifice in the discharge line to control (restrict) the pumps flow rate. Alternatively, reduce pump head by trimming impeller to a smaller diameter.

Consult Price Pump or a local Price Pump distributor for assistance.

appsupport@pricepump.com

TROUBLESHOOTING

1. Pump fails to build head pressure:

Check for:

a. Pump not primed.

b. Incorrect pump rotation.

c. Driver speed too low.

d. Suction line restricted.

e. Driver failure.

f. Plugged or damaged impeller.

g. Pump or impeller undersized.

h. Pump cavitation.

i. Improper impeller clearance.

2. Pump fails to provide enough flow rate.

Check for:

a. System resistance too high.

b. Pump undersized.

c. Pump not primed.

d. Driver speed too low.

e. Poor suction conditions.

f. Improper impeller clearance.

3. Excessive noise or vibration during operation.

Check for:

a. Motor bearing failing.

b. Pump cavitation.

c. Improper impeller clearance.

4. Leaking mechanical seal.

Check for:

a. Improper assembly.

b. Worn or cracked seal faces.

c. Abrasive material in fluid.

d. Liquid flashing at seal faces (Fluid temperature too high).

e. Seal pressure rating too low for the service.

f. Chemical attack of seal components.

g. Seal operated dry or with a liquid having poor lubricating properties.

5. Pump gradually loses pressure and head.

Check for:

a. Increasing temperature causing cavitation or liquid vaporization.

b. Driver failure.

c. Suction lift too high.

d. Air entering suction line.

6. Motor overheating.

Check for:

a. Excessive flow and amp draw (Throttle discharge).

b. Low voltage or frequency.

c. Flow rate too low with resulting heat rise.

d. Bearing failure.

e. System temperature too high.

TYPE HP MAINTENANCE AND REPAIR

Before attempting any repairs under warranty, contact Distributor to obtain factory authorization. Repairs carried out without authorization may void warranty. Many causes of pump system failure are due to improper system design. Refer to the trouble shooting -list in this manual before carrying out pump inspection.

DISASSEMBLY

1. Disconnect power source to motor.

2. Disconnect electrical connections tagging wires carefully to preserve correct rotation. Loosen motor base.

3. Remove pump and motor assembly to repair area. Observe position of all parts prior to disassembly. (Note: Volute may be left in piping.)

4. Remove bolts and remove volute from pump.

5. Remove impeller. Unscrew CCW. (note: remove center cap from rear of moto r, insert screwdriver to hold shaft while un -screwing impeller).

6. Remove seal head from motor shaft. Type 8 & 9: Loosen set screws and slide seal head off shaft.

7. Remove motor bolts and remove bracket from motor.

8. Remove seal seat from bracket using fingers.

REASSEMBLY

1. Clean seat cavity of the bracket thoroughly. (For Bell Gasket Design, assure that there are no cuts or tearing in the end bell gasket.)

2. Thoroughly clean pump shaft. Assure that the shaft is not grooved and that there is no evidence of pitting or fretting. Polish the shaft with extra fine emery cloth if needed. If the shaft is grooved, fretted or worn, replace the motor.

3. **For Type 6, 8, 9 and 21 seals:**

a. Place the bracket on a firm surface with the seat cavity (pump end) up. (Fo r Bell Gasket Design, place new end bell gasket on bracket).

b. Install seal seat into seat cavity. (For Bell Gasket Design remove the rubber seat cup and discard). Evenly push seat into cavity with fingers. To help ensure the seat is not damaged place cardboard disk over the seat face then gently tap seat into place with a wooden dowel or plastic rod (1 -1/8" outside diameter).

T6 seal only:

a. Set seal on shaft with carbon facing ceramic seat. Do not push seal head past shoulder on shaft (note: when imp eller is threaded onto motor shaft seal height will automatically be set.)

T21 only:

a. Lubricate shaft and elastomer with vegetable oil.

b. Install rotary seal head onto motor shaft and slide toward seat until carbon face touches seal seat.

c. Install sea l spring and seal retainer.

T 8 & 9 only:

a. Install seal head onto pump shaft sliding gently past shoulder of shaft. Slide seal head toward seat until carbon face contacts ceramic seat.

b. Tighten seal head setscrews to pump shaft. Remove clips in seal head and discard.

4. Install impeller. Thread impeller onto shaft CW. (For st ainless steel / bronze impellers, apply L octite 242, For CPVC / Noryl impellers, apply L octite 248 or equivalent to the motor shaft before threading the impeller onto the motor shaft) Place screwdriver in motor shaft slot in rear of motor to hold while tightening impeller firmly. (For O-ring Design, install the O - ring on to the bracket face).

Note: For type 21: Ensure that the spring retainer does not slip between the shoulder of the shaft and the hub of the impeller.

5. Install volute and tighten bolts evenly (star pattern) to required torque.

Volute Bolt T orque Specifications

SS / Bronze - 10-12 ft/ lbs.
(13.5-16.3 Nm)

CPVC - 6 ft / lbs.
(9.5 Nm)

Noryl- 10 ft / lbs.
(13.5 Nm)

6. Rotate shaft by hand to make sure impeller does not rub against volute.

7. Ret urn pump to installation, reconnect electric connections.

8. Start pump momentarily to observe shaft rotation. If rotation corresponds to the rotation arrow pump may be put into service. If rotation is incorrect, switch any two leads on 3 -phase motors. Che ck the wiring diagram of motor for single phase rotation.

9. Prime pump thoroughly, making sure all air is purged.

10. Start pump allowing adequate time to purge any additional air from system. Observe any gauges, flow meters, etc. to verify that pump is performing properly.

HP75 CN/CS/NN

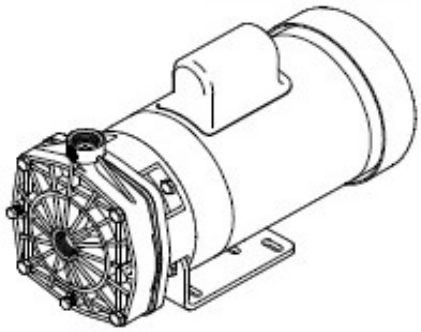

HP75 BN/BS/KN/KS/SS/SC/AB

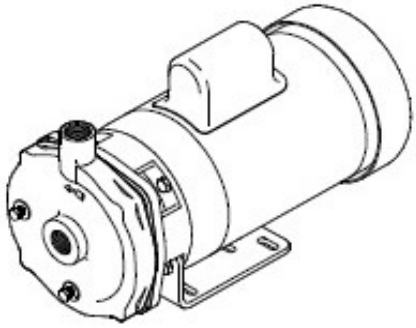

HP100 SS/AB

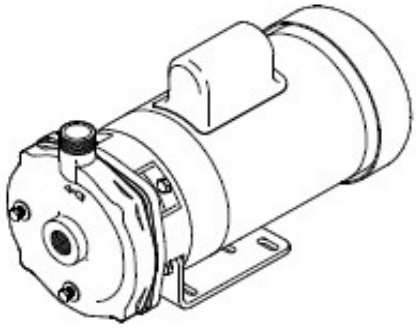

INSTALLING A PEO (PUMP END ONLY) STUB SHAFT PUMP

a. Place the bracket on a firm surface, loosen stub shaft setscrews and carefully remove shipping plug.

b. Place motor in an upright position with motor shaft pointing upward. Make sure motor shaft and end bell flange are free of burrs and surfaces are clean.

c. Align PEO stub shaft setscrews (if applicable) with motor shaft keyway and carefully slid the PEO onto the motor shaft until it sits firmly onto the motor end bell flange.

d. Oriented the PEO's discharge port or base to preferred motor configuration while referencing the motors electrical box position.

e. Install flange bolts and tighten. (Install pump base if applicable)

f. Reposition pump back onto motor base.

g. Refer to pump Reassembly Instructions and proceed to **setting the impeller clearance** (if applicable).

INSTALLING A PEO (PUMP END ONLY) NON-STUB SHAFT PUMP

a. Carefully un-pack all components received with your shipment and remove any shipping plugs.

b. Place the bracket on a firm surface with the s eat cavity (pump end) up. Follow seal Installation / reassembly instructions contained within this manual.

c. Make sure motor shaft and motor end bell flange are free of burrs and surfaces are clean.

d. Carefully place the Bracket assembly over the motor shaft and align bracket with motor end bell flange.

e. Install impeller, gasket or o -ring, volute and volute mounting bolts.

f. Oriented the PEO's discharge port or base to preferred motor configuration while referencing the motors electrical box position.

g. Install motor flange bolts and tighten all bolts to proper torque . (Install pump base if applicable)

PRICE® PUMP CO.

HP75/HP100 (O-Ring Design) Parts List

Key #	Description	QTY.	HP75/100 SS&SC:	HP75/100 AB:	HP75 NN:
A.	Volute HP75	1	0241(A[1])	0229-0(A[1])	8300NN(A[3])
	Volute HP100	1	0241-2(A[2])	0229-2(A[2])	N/A
B.	1/8" Pipe Plug	2	0559(B[1])	0558(B[1])	8012BF(B[3]) (1ea)
C.	Volute Bolts	4	0579(C[1])	0592(C[1])	0723(C[2])
D.	Washers	12	N/A	N/A	1137
E.	Volute Nuts	4	N/A	N/A	1138
F.	Impeller	1	0918SS-(dia.)	0918BR-(dia.)	N/A
	Impeller CPVC	1	0918-(dia.)	N/A	0918-(dia.)
G	Bracket	1	0238(SS)(G[1])	0242(BR)(G[1])	8019NN-1(G[2])
H[1].	T.21 Viton	1	0553 (std)	0553 (std)	0553
H[2].	T.8 Viton	1	2394-PU	2394-PU	N/A
H[2].	T.9 Teflon	1	1150	1150	N/A
H[3].	T.6 Buna	1	N/A	N/A	0118 (std)
J.	O-ring	1	3565	3565	0871
K.	Slinger	1	0515	0515	0515
L.	Base	1	0197	0197	0198
M.	Bolts, Motor				
	Upper	2	0579	0579	0588
	Lower	2	0724	0724	0673
N[1].	Motor	1	Specify P/N	Specify P/N	Specify P/N
N[2].	Power Frame	1	5479	5479	5479

HP75 / HP100 Repair Parts Kits (O-ring Design)

(Repair kits for SC pumps only)

P/N	Includes	P/N	Includes
0661SC-8	4.00" CPVC Imp., Viton O-ring, and Slinger	0661SC-3	5.25" CPVC Imp., Viton O-ring, and Slinger
0661SC-6	4.25" CPVC Imp., Viton O-ring, and Slinger	0661SC-2	5.50" CPVC Imp., Viton O-ring, and Slinger
0661SC-5	4.50" CPVC Imp., Viton O-ring, and Slinger	0661SC-1	5.75" CPVC Imp., Viton O-ring, and Slinger
0661SC-7	4.75" CPVC Imp., Viton O-ring, and Slinger	0661SC	6.00" CPVC Imp., Viton O-ring, and Slinger
0661SC-4	5.00" CPVC Imp., Viton O-ring, and Slinger		

Note: Seal/Seat must be ordered in addition to repair kit

Standard Pump Configurations

Model:	Volute Material:	Bracket Material:	Impeller Material:
SS	316SS	316SS	316SS
SC	316SS	316SS	CPVC
AB	Bronze	Bronze	Bronze
NN	Noryl	Noryl	CPVC

PRICE® PUMP CO.

HP75-100_(O-Ring)_P.dwg rev. B

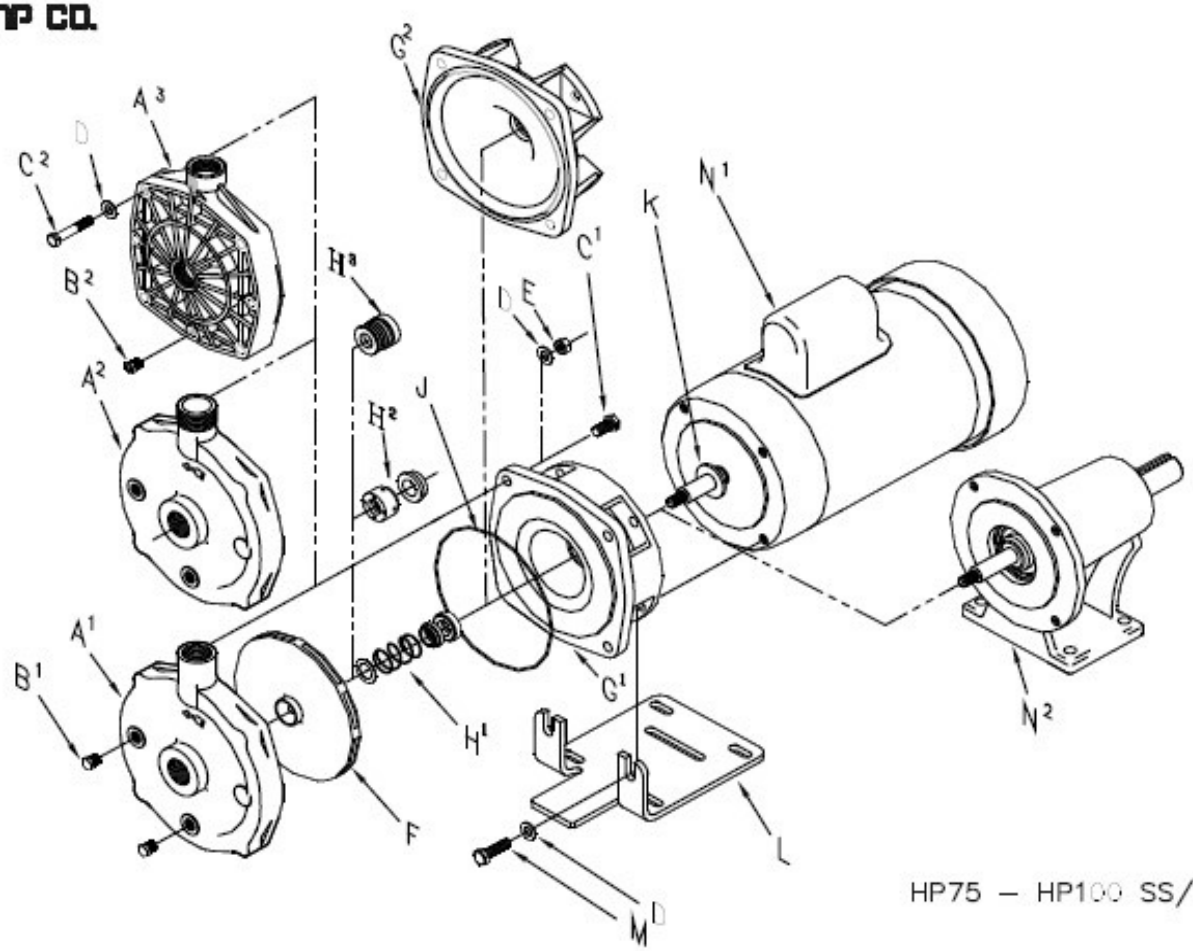

HP75 – HP100 SS/SC/AB/NN

Price® Pump Co.
21775 Eighth Street East * Sonoma, CA 95476-0329 * (707) 938-8441 * Fax (707) 938-0764

PRICE PUMP CO.

HP75 (Gasket Design) Parts List

Key #	Description	QTY.	HP75 BN/BS:	HP75 KN/KS:	HP75 CN / CS:
A.	Volute	1	0229(A[1])	0229KP(A[1])	8300CP(A[2])
B.	1/8" Pipe Plug	2	0558(B[1])	0559(B[1])	8012PF(B[2]) (1ea.)
C.	Volute Bolts	4	0592(C[1])	0588(C[1])	1136(C[2])
D.	Washers	4	N/A	N/A	1137
E.	Volute Nuts	4	N/A	N/A	1138
F.	Impeller CPVC	1	0918-(Imp. Dia.)	0918-(Imp. Dia.)	0918-(Imp. Dia.)
	Impeller 316SS	1	0918SS-(Imp. Dia.)	0918SS-(Imp. Dia.)	0918SS-(Imp. Dia.)
G[1].	T.6 Buna (std)	1	0118	0118	0118
G[2].	T.21Viton	1	0553	0553	0553
H.	Gasket, EPDM	1	0232	0232	0232
J.	Bracket	1	0228	0228	0228
K.	Slinger	1	0515	0515	0515
L.	Base	1	0198	0198	0198
M.	Bolts, Motor				
	Upper	2	0588	0588	0588
	Lower	2	0673	0673	0673
N[1].	Motor	1	Specify P/N	Specify P/N	Specify P/N
N[2].	Power Frame	1	5479	5479	5479

HP75 Repair Parts Kits (Bell Gasket Design)

(Repair kits for BN, KN, & CN pumps only)

P/N	Includes	P/N	Includes
0661-8	4.00" CPVC Imp., EPR Gasket, and Slinger	0661-3	5.25" CPVC Imp., EPR Gasket, and Slinger
0661-6	4.25" CPVC Imp., EPR Gasket, and Slinger	0661-2	5.50" CPVC Imp., EPR Gasket, and Slinger
0661-5	4.50" CPVC Imp., EPR Gasket, and Slinger	0661-1	5.75" CPVC Imp., EPR Gasket, and Slinger
0661-7	4.75" CPVC Imp., EPR Gasket, and Slinger	0661	6.00" CPVC Imp., EPR Gasket, and Slinger
0661-4	5.00" CPVC Imp., EPR Gasket, and Slinger		

Note: Seal/Seat must be ordered in addition to repair kit .

Standard Pump Configurations

Model:	Volute Material :	Bracket Material:	Impeller Material:
BN	Bronze	Cast Iron	CPVC
KN	Kanigen	Cast Iron	CPVC
CN	CPVC	Cast Iron	CPVC
BS	Bronze	Cast Iron	316SS
KS	Kanigen	Cast Iron	316SS
CS	CPVC	Cast Iron	316SS

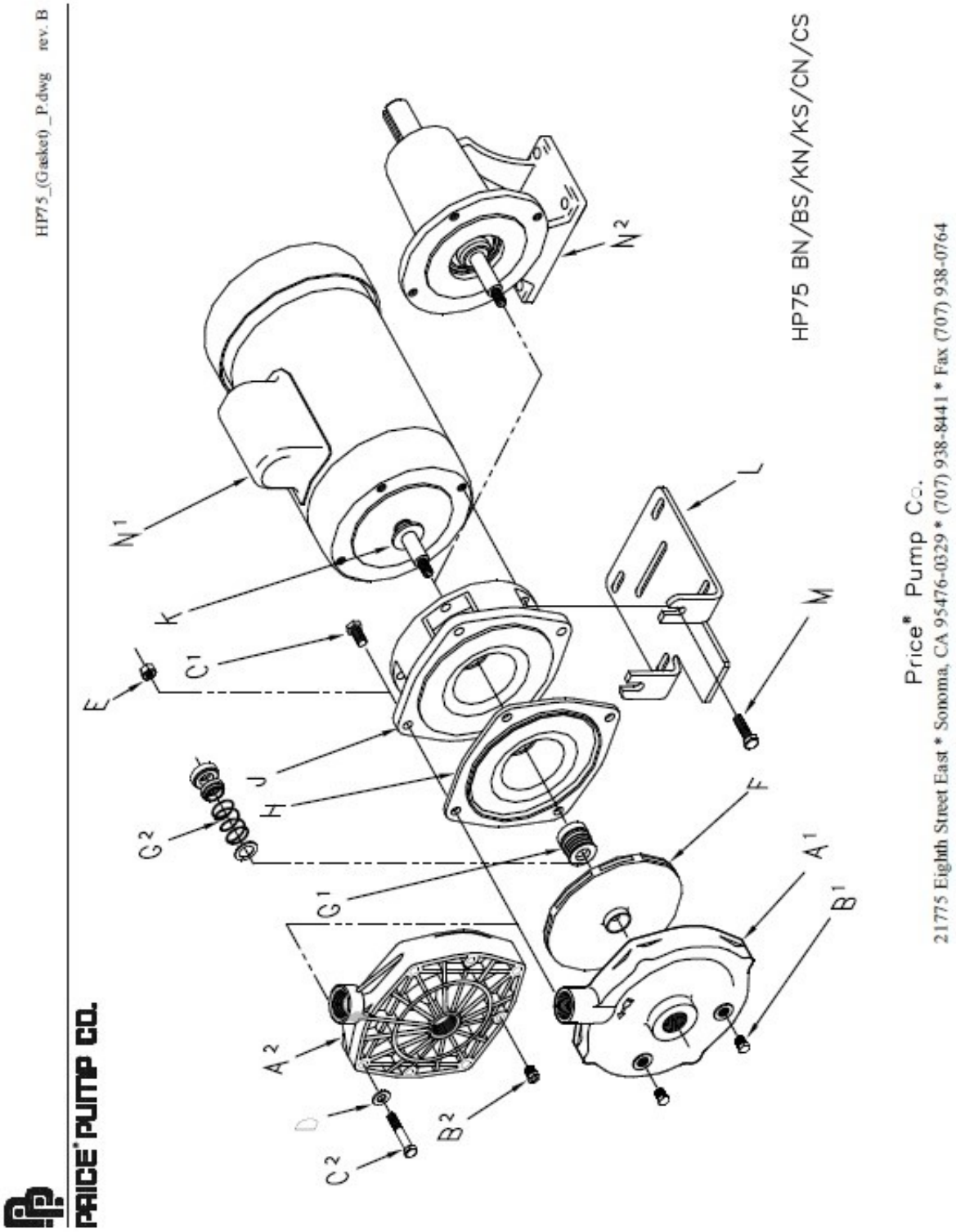
HP75_(Gasket)_P.dwg rev. B
PRICE® PUMP CO.
HP75 BN/BS/KN/KS/CN/CS
Price® Pump Co.
21775 Eighth Street East * Sonoma, CA 95476-0329 * (707) 938-8441 * Fax (707) 938-0764
N1
N2
K
C1
E
J
H
C2
G1
A2
D
C2
B2
F
A1
B1
L
M

PRICE CENTRIFUGAL PUMP CAUTIONS & WARNINGS

- **CAUTION:** Price Pump centrifugal pumps must be operated above minimum flow rate to avoid damage.
- **CAUTION:** All Price Pump centrifugal pumps require the suction to be flooded.
- **CAUTION:** It is recommended that all piping connections to the pump be flexible.
- **WARNNING:** Verify chemical compatibility of the pump materials of construction with the fluid being pumped.
- **WARNNING:** Price centrifugal pumps are not designed for use in sanitary or food applications.
- **CAUTION:** Use only Price Pump original equipment factory replacement parts.
- **WARNNING:** Price pump fluid temperature limits must be observed. Maximum operating temperature is 300°F.
- **CAUTION:** The pump should be thoroughly flushed and drained before disassembly.
- **CAUTION:** For larger pump motor units, weight may exceed 65 1bs. (30 kg).

CAUTION: Maximum working pressure for seals:

o Type 6 Seal	**75 PSI** (5.2 bar)
o Type 6A Seal	**75 PSI** (5.2 bar)
o Type 8 Seal	**325 PSI** (22.4 bar)
o Type 9 Seal	**350 PSI** (24.1 bar)
o Type 21 Seal	**150 PSI** (10.3 bar)
o Type 2106 Seal	**150 PSI** (10.3 bar)

CAUTION: Maximum solid size by pump

o HP75 / MS50	**0.030"** (0.76mm)
o SP150	**0.060"** (1.50mm)
o LT25	**0.120"** (3.05mm)
o F50/75/95	**0.150"** (3.81mm)
o OH75	**0.150"** (3.81mm)
o CD100/150	**0.150"** (3.81mm)
o CL150	**0.150"** (3.81mm)
o RC200/300	**0.380"** (9.60mm)
o XJ-JB100	**0.120"** (3.05mm)
o XJ-JB150	**0.250"** (6.40mm)
o XJ-JB200	**0.440"** (11.2mm)
o XL-XT100	**0.120"** (3.05mm)
o XL-XT150	**0.250"** (6.40mm)
o XL-XT200	**0.440"** (11.2mm)

CAUTION: Minimum flow rate by pump

o HP75 / MS50	**0.5 GPM** (1.9 LPM)
o SP150	**10 GPM** (38 LPM)
o LT25	**0.5 GPM** (1.9 LPM)
o F50/75/95	**5.0 GPM** (19 LPM)
o OH75	**7.0 GPM** (26 LPM)
o CD100	**12 GPM** (45 LPM)
o CD150	**25 GPM** (94 LPM)
o CL150	**40 GPM** (150 LPM)
o RC200	**10 GPM** (38 LPM)
o RC300	**50 GPM** (189 LPM)
o XJ-JB150	**20 GPM** (75 LPM)
o XJ-JB150	**40 GPM** (150 LPM)
o XJ-JB200	**90 GPM** (340 LPM)
o XL-XT100	**10 GPM** (38 LPM)
o XL-XT150	**35 GPM** (132 LPM)
o XL-XT200	**50 GPM** (189 LPM)

This Page Intentionally Left Blank

DOW FILMTEC™ MEMBRANES

DOW FILMTEC™ Membranes

DOW FILMTEC Seawater RO Elements for Marine Systems

Features

Improved DOW FILMTEC™ seawater reverse osmosis elements offer the highest productivity while maintaining excellent salt rejection.

- DOW FILMTEC SW30 membrane elements have the highest flow rates available to meet the water demands of both sea-based and land-based desalinators.
- DOW FILMTEC SW30 elements may also be operated at lower pressure to reduce pump size, cost and operating expenses.
- Improved DOW FILMTEC seawater membrane combined with automated, precision element fabrication result in the most consistent product performance available.

Product Specifications

Product	Part Number	Applied Pressure psig (bar)	Permeate Flow Rate gpd (m^3/d)	Stabilized Salt Rejection (%)
SW30-2514	80733	800 (55)	150 (0.6)	99.4
SW30-2521	80734	800 (55)	300 (1.1)	99.4
SW30-2540	80737	800 (55)	700 (2.6)	99.4
SW30-4021	80740	800 (55)	800 (3.0)	99.4
SW30-4040	80741	800 (55)	1,950 (7.4)	99.4

1. Permeate flow and salt rejection based on the following test conditions: 32,000 ppm NaCl, pressure specified above, 77°F (25°C) and the following recovery rates; SW30-2514 – 2%, SW30-2521 & SW30-4021 – 5%, SW30-2540 & SW30-4040 – 8%.
2. Permeate flows for individual elements may vary +/-20%.
3. For the purpose of improvement, specifications may be updated periodically.

Figure 1

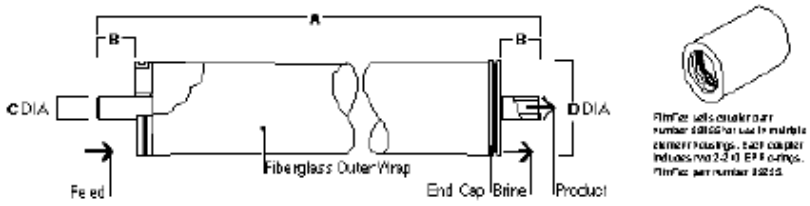

Product	Maximum Feed Flow Rate gpm (m^3/h)	Dimensions – Inches (mm) A	B	C	D
SW30-2514	6 (1.4)	14.0 (356)	1.19 (30.2)	0.75 (19)	2.4 (61)
SW30-2521	6 (1.4)	21.0 (533)	1.19 (30.2)	0.75 (19)	2.4 (61)
SW30-2540	6 (1.4)	40.0 (1,016)	1.19 (30.2)	0.75 (19)	2.4 (61)
SW30-4021	16 (3.6)	21.0 (533)	1.05 (26.7)	0.75 (19)	3.9 (99)
SW30-4040	16 (3.6)	40.0 (1,016)	1.05 (26.7)	0.75 (19)	3.9 (99)

1. Refer to DOW FILMTEC Design Guidelines for multiple-element systems.
2. SW30-2514, SW30-2521 and SW30-2540 elements fit nominal 2.5-inch I.D. pressure vessels. SW30-4021 and SW30-4040 elements fit nominal 4-inch I.D. pressure vessel.

1 inch = 25.4 mm

™® Trademark of The Dow Chemical Company ("Dow") or an affiliated company of Dow

Operating Limits

• Membrane Type	Polyamide Thin-Film Composite
• Maximum Operating Temperature	113°F (45°C)
• Maximum Operating Pressure	1,000 psi (69 bar)
• Maximum Pressure Drop	15 psig (1.0 bar)
• pH Range, Continuous Operation[a]	2 - 11
• pH Range, Short-Term Cleaning[b]	1 - 13
• Maximum Feed Silt Density Index	SDI 5
• Free Chlorine Tolerance[c]	<0.1 ppm

[a] Maximum temperature for continuous operation above pH 10 is 95°F (35°C).
[b] Refer to Cleaning Guidelines in specification sheet 609-23010.
[c] Under certain conditions, the presence of free chlorine and other oxidizing agents will cause premature membrane failure. Since oxidation damage is not covered under warranty, DOW FILMTEC recommends removing residual free chlorine by pretreatment prior to membrane exposure. Please refer to technical bulletin 609-22010 for more information.

Important Information

Proper start-up of reverse osmosis water treatment systems is essential to prepare the membranes for operating service and to prevent membrane damage due to overfeeding or hydraulic shock. Following the proper start-up sequence also helps ensure that system operating parameters conform to design specifications so that system water quality and productivity goals can be achieved.

Before initiating system start-up procedures, membrane pretreatment, loading of the membrane elements, instrument calibration and other system checks should be completed.

Please refer to the application information literature entitled "Start-Up Sequence" (Form No. 609-02077) for more information.

Operation Guidelines

Avoid any abrupt pressure or cross-flow variations on the spiral elements during start-up, shutdown, cleaning or other sequences to prevent possible membrane damage. During start-up, a gradual change from a standstill to operating state is recommended as follows:

- Feed pressure should be increased gradually over a 30-60 second time frame.
- Cross-flow velocity at set operating point should be achieved gradually over 15-20 seconds.
- Permeate obtained from first hour of operation should be discarded.

General Information

- Keep elements moist at all times after initial wetting.
- If operating limits and guidelines given in this bulletin are not strictly followed, the limited warranty will be null and void.
- To prevent biological growth during prolonged system shutdowns, it is recommended that membrane elements be immersed in a preservative solution.
- The customer is fully responsible for the effects of incompatible chemicals and lubricants on elements.
- Maximum pressure drop across an entire pressure vessel (housing) is 50 psi (3.4 bar).
- Avoid static permeate-side backpressure at all times.

DOW FILMTEC™ Membranes
For more information about DOW FILMTEC membranes, call the Dow Water & Process Solutions business:

North America:	1-800-447-4369
Latin America:	(+55) 11-5188-9222
Europe:	(+32) 3-450-2240
Pacific:	+60 3 7958 3392
Japan:	+813 5460 2100
China:	+86 21 2301 1000

www.dowwaterandprocess.com

Notice: The use of this product in and of itself does not necessarily guarantee the removal of cysts and pathogens from water. Effective cyst and pathogen reduction is dependent on the complete system design and on the operation and maintenance of the system.

Notice: No freedom from any patent owned by Dow or others is to be inferred. Because use conditions and applicable laws may differ from one location to another and may change with time, Customer is responsible for determining whether products and the information in this document are appropriate for Customer's use and for ensuring that Customer's workplace and disposal practices are in compliance with applicable laws and other government enactments. Dow assumes no obligation or liability for the information in this document. NO WARRANTIES ARE GIVEN; ALL IMPLIED WARRANTIES OF MERCHANTABILITY OR FITNESS FOR A PARTICULAR PURPOSE ARE EXPRESSLY EXCLUDED.

™® Trademark of The Dow Chemical Company ("Dow") or an affiliated company of Dow

Form No. 609-00377-0811

This Page Intentionally Left Blank

BURKERT DIVERSION VALVE

Type 0121, 0330, 0331 (0124, 0125, 0332, 0333)

2/2- and 3/2-Way Solenoid Valve
2/2- und 3/2-Wege-Magnetventil
Électrovanne à 2/2 et 3/2 voies

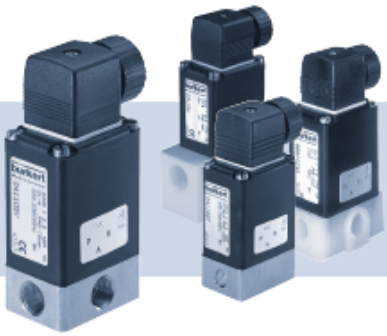

Operating Instructions
Bedienungsanleitung
Manuel d'utilisation

MAN 1000010161 ML Version: G Status: RL (released | freigegeben) printed: 24.10.2016

Bürkert Fluid Control Systems
Sales Center
Christian-Bürkert-Str. 13-17
D-74653 Ingelfingen
Tel. + 49 (0) 7940 - 10 91 111
Fax + 49 (0) 7940 - 10 91 448
E-mail: info@de.buerkert.com

International address
www.burkert.com

Manuals and data sheets on the Internet: www.burkert.com
Bedienungsanleitungen und Datenblätter im Internet: www.buerkert.de
Instructions de service et fiches techniques sur Internet : www.buerkert.fr

© Bürkert Werke GmbH, 2014
Operating Instructions 1402/04_EU-ML_00893047 / Original DE

www.burkert.com

Table of Contents

1 The operating instructions 2
2 Authorized use 3
3 Basic safety instructions 4
4 System description 5
5 Technical data 6
6 Assembly 8
7 Electrical connection 10
8 Disassembly 12
9 Maintenance, troubleshooting 12
10 Transportation, storage, disposal 13

1 THE OPERATING INSTRUCTIONS

The operating instructions contain important information.

- Read the instructions carefully and follow the safety instructions.
- Keep the instructions in a location where they are available to every user.

The liability and warranty for the device are void if the operating instructions are not followed.

1.1 Symbols

- Designates instructions for risk prevention.

→ Designates a procedure which you must carry out.

DANGER!

Immediate danger! Serious or fatal injuries.

WARNING!

Possible danger! Serious or fatal injuries.

CAUTION!

Danger! Moderate or minor injuries.

NOTE!

Warns of damage to property.

Important tips and recommendations.

Refers to information in these operating instructions or in other documentation.

1.2 Definitions of terms

In these instructions, the term "device" always refers to the Type 0121, 0330, 0331, (0124, 0125, 0332, 0333).

2 AUTHORIZED USE

The device is designed to control, shut off and meter neutral and aggressive media up to a viscosity of 37 mm²/s.

- Use according to the authorized data, operating conditions and conditions of use specified in the contract documents and operating instructions.
- Provided the cable plug is connected and installed correctly, e.g. Bürkert Type 2508, the device satisfies degree of protection IP65 in accordance with DIN EN 60529 / IEC 60529.

Only operate the device

- when in perfect condition and always ensure proper storage, transportation, installation and operation.
- Use the device only as intended.

2.1 Restrictions

If exporting the device, observe any existing restrictions.

MAN 1000010161 ML Version: G Status: RL (released | freigegeben) printed: 24.10.2016

3 BASIC SAFETY INSTRUCTIONS

These safety instructions do not make allowance for any contingencies and events which may arise during assembly, operation and maintenance.

Risk of injury from high pressure in the system/device.

- Before working on the system or device, switch off the pressure and vent/drain lines.

Risk of injury due to electrical shock.

- Before working on the system or device, switch off the power supply and secure to prevent reactivation.
- Observe applicable accident prevention and safety regulations for electrical equipment.

Risk of burns/risk of fire if used for a prolonged switch-on time through hot device surface.

- Keep device away from highly flammable substances and media and do not touch with bare hands.

Risk of injury due to malfunction of valves with alternating voltage (AC).

Sticking core causes coil to overheat, resulting in a malfunction.

- Monitor process to ensure function is in perfect working order.

Risk of short-circuit/escape of media through leaking screw joints.

- Ensure seals are seated correctly.
- Carefully screw valve and pipelines together.

General hazardous situations.

To prevent injuries:

- In a potentially explosive area, the device may be used only in accordance with the specification on the type label. For the use, observe the supplementary instructions manual enclosed with the device with safety instructions for the explosion-risk area.
- The enclosed UL instructions must be followed in the UL area.
- Do not carry out any external or internal modifications and do not subject the device to mechanical loads (e.g. by placing objects on it or standing on it).
- Secure the device against unintentional activation.
- Only trained technicians may perform installation and maintenance work.
- The valves must be installed in accordance with the regulations applicable in the country.
- After an interruption in the power supply, ensure that the process is restarted in a controlled manner.
- Observe the general rules of technology.

4 SYSTEM DESCRIPTION

4.1 General description

The pivoted armature valves are direct acting 2/2 or 3/2-way solenoid valves in a wide variety of circuit functions and models. Solenoid system and media chamber are separated from one another by a separating diaphragm system. The valves are fast acting and have a long service life.

Type 0121	2/2 or 3/2-way solenoid valve, socket valve body
Type 0330	2/2 or 3/2-way solenoid valve, socket valve body
Type 0331	2/2 or 3/2-way solenoid valve, flange valve body
Type 0332	Bistable 2/2 or 3/2-way solenoid valve with 2 coil windings, socket valve body
Type 0333	Bistable 2/2 or 3/2-way solenoid valve with 2 coil windings, flange valve body
Type 0124	2/2 or 3/2-way solenoid valve, socket valve body
Type 0125	2/2 or 3/2-way solenoid valve, flange valve body

MAN 1000010161 ML Version: G Status: RL (released | freigegeben) printed: 24.10.2016

5 TECHNICAL DATA

The following values are indicated on the type label:

- **Voltage** (tolerance ±10 %) / **current type**
- **Coil power consumption** (active power in W - at operating temperature)
- **Pressure range**
- **Body material** (MS=brass, VA=stainless steel, PV=PVC, TE=PTFE, PP=polypropylene, PD=PVDF)
- **Sealing material** (F=FKM, A=EPDM, B=NBR, C=FFKM)

5.1 Conformity

The Types 0121, 0330, 0331, (0124, 0125, 0332, 0333) are compliant with the EC Directives according to the EC Declaration of Conformity.

5.2 Standards

The applied standards, which are used to demonstrate compliance with the EC Directives, are listed in the EC type test certificate and/or the EC Declaration of Conformity.

5.3 Operating conditions

Ambient temperature

Type 0121	max. +50°C
Other types	max. +55°C

Duty cycle
for body material

Brass or stainless steel	long-term operation, duty cycle 100%
Plastic	max. permissible duty cycle see data sheet

Important information for functional reliability.
If switched off for a long period, 1-2 switching actions are recommended prior to restart.

Service life
High switching frequency and high pressures reduce the service life.

Degree of protection	IP65 in accordance with DIN EN 60529 / IEC 60529 with correctly connected and installed cable plug, e.g. Bürkert Type 2508

5.4 Mechanical data

Dimensions	see data sheet
Coil material	epoxide
Connections	G 1/4 (NPT 1/4, G 1/8, G 3/8, Rc 1/4 on request)

5.5 Fluidic data

Media	aggressive, neutral, gaseous and liquid media, which do not attack body and sealing materials. (see resistance table at www.buerkert.de).

Medium temperature for sealing material

FKM	0 °C – +90 °C
EPDM	-30 °C – + 90 °C
NBR	0 °C – + 80 °C
FFKM	+5 °C – +90 °C

Circuit functions		
A (NC)		2/2-way valve, closed in rest position
B (NO)		2/2-way valve, open in rest position
C (NC)		3/2-way valve; closed in rest position, output A unloaded
D (NO)		3/2-way valve, in rest position, output B pressurized
E		3/2-way mixing valve; in rest position, pressure connection P2 connected to output A, P1 closed
F		3/2-way distribution valve, in rest position, pressure connection P connected to output B
T		3/2-way all purpose valve

5.6 Electrical data

Connections DIN EN 175301-803 (DIN 43 650), shape A for cable plug Type 2508 or 2509

5.7 Type label

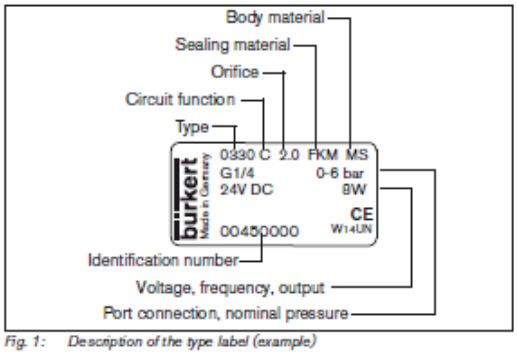

Fig. 1: Description of the type label (example)

6 ASSEMBLY

DANGER!

Risk of injury from high pressure in the system/device.
- Before working on the system or device, switch off the pressure and vent/drain lines.

Risk of injury due to electrical shock.
- Before working on the system or device, switch off the power supply and secure to prevent reactivation.
- Observe applicable accident prevention and safety regulations for electrical equipment.

WARNING!

Risk of injury from improper assembly.
- The assembly may be carried out only by trained technicians and with the appropriate tools.
- Secure system against unintentional activation.
- Following assembly, ensure a controlled restart.

MAN 1000010161 ML Version: G Status: RL (released | freigegeben) printed: 24.10.2016

6.1 Before installation

Installation position:

The installation position is optional. Preferably: Actuator at the top.

→ Prior to installation check pipelines for dirt and clean if necessary.

Dirt filter: To ensure that the solenoid valve functions reliably, a dirt filter (≤ 500 µm) must be installed in front of the valve input.

6.2 Installation

→ Observe flow direction:
Functioning of the device is only ensured if the circuit function is maintained.

Devices in socket model

→ Use PTFE tape as sealing material.

→ Determine the maximum screw-in depth of the connecting threads as this does not comply with any standard.

NOTE!

Caution risk of breakage.
- Do not use the coil as a lifting arm.

→ Hold the device with a suitable tool (open-end wrench) on the body; screw into the pipeline.

Attaching the device:

→ Via bore holes M4x8 (made from brass or stainless steel) or self-tapping screws 3.9 DIN 7970 (made from plastic, max. screw-in depth 10 mm) on the bottom side of the body at drill pattern 38x24.

Devices in flange model

Attaching the device:

→ Via supplied screws on basic devices or manifold.

→ Tighten fastening screws on the coil to a maximum torque of 2 Nm.

6.3 Manual control

NOTE!

- When the manual control is locked, the valve cannot be actuated electrically.

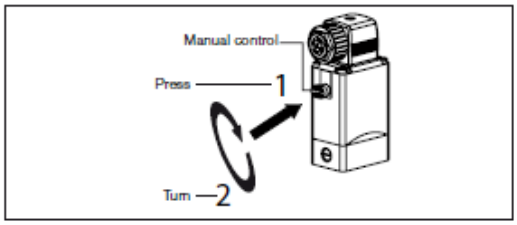

Fig. 2: Manual control

7 ELECTRICAL CONNECTION

DANGER!

Risk of injury due to electrical shock.
- Before working on the system or device, switch off the power supply and secure to prevent reactivation.
- Observe applicable accident prevention and safety regulations for electrical equipment.

If the protective conductor is not connected, there is a risk of electric shock.
- Always connect protective conductor and check electrical continuity between coil and housing.

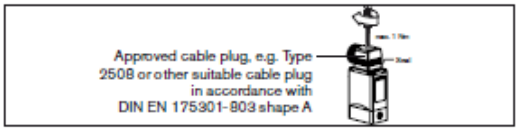

Fig. 3: Connecting the cable plug to the power supply

Note the voltage and current type as specified on the type label.

7.1 Standard model

→ Connect L1/+ and N/– to terminals 1 and 2, independent of the polarity.

→ Connect protective conductor.

→ Attach seal and check for correct fit.

→ Tighten cable plug (Type 2508 or 2509 in accordance with DIN EN 175301-803 (DIN 43 650), shape A, for order numbers see data sheet); while doing so, observe the maximum torque of 1 Nm.

→ Check electrical continuity between coil and body (protective conductor function).

7.2 Pulse model (CF 02)

In accordance with the terminals on the valves, the connection terminals in the cable plug are marked with the numbers 1 to 3.

→ Connect as shown in "Fig. 4". Pulse on terminal 1 closes the valve; pulse on terminal 2 opens the valve.

→ Attach seal and check for correct fit.

→ Tighten cable plug (Type 2508 or 2509 in accordance with DIN EN 175301-803 (DIN 43 650), shape A, for order numbers see data sheet); while doing so, observe the maximum torque of 1 Nm.

→ Check electrical continuity between coil and body (protective conductor function).

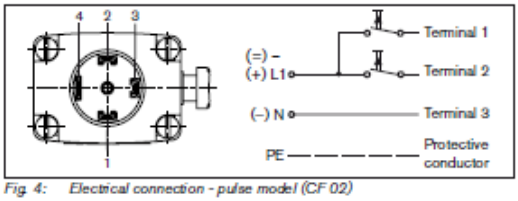

Fig. 4: Electrical connection - pulse model (CF 02)

NOTE!

- Prevent simultaneous pulsing on both coil windings.
- Parallel to the terminals, no other consumers (relay, etc.) may be connected.
- The respective coil connection that does not carry current must be galvanically isolated (open).
- In case two or more valves are connected in parallel, the use of two-pole or multi-pole switches must ensure that this requirement is met.

8 DISASSEMBLY

DANGER!

Risk of injury from high pressure in the system/device.
- Before working on the system or device, switch off the pressure and vent/drain lines.

Risk of injury due to electrical shock.
- Before working on the system or device, switch off the power supply and secure to prevent reactivation.
- Observe applicable accident prevention and safety regulations for electrical equipment.

WARNING!

Risk of injury from improper disassembly.
- Disassembly may be carried out only by trained technicians and with the appropriate tools.

Risk of injury from hazardous media.
- Before loosening lines or valves, flush out hazardous media, depressurize and drain the lines.

9 MAINTENANCE, TROUBLESHOOTING

9.1 Safety Instructions

DANGER!

Risk of injury from high pressure in the system.
- Turn off the pressure and vent the lines before loosening lines or valves.

Risk of injury due to electrical shock.
- Before working on the system or device, switch off the power supply and secure to prevent reactivation.
- Observe applicable accident prevention and safety regulations for electrical equipment.

WARNING!

Risk of injury from improper maintenance work.
- Maintenance may be carried out only by trained technicians and with the appropriate tools.
- Secure system against unintentional activation.
- Following maintenance, ensure a controlled restart.

MAN 1000010161 ML Version: G Status: RL (released | freigegeben) printed: 24.10.2016

9.2 Malfunctions

If malfunctions occur, check whether:

→ the device has been installed according to the instructions,

→ the electrical and fluid connections are correct,

→ the device is not damaged,

→ all screws have been tightened,

→ the voltage and pressure have been switched on,

→ the pipelines are clean.

Malfunction	Possible cause
Valve does not switch	Short circuit or coil interrupted
	Medium pressure outside the permitted pressure range
	Manual control locked
Valve does not close	Inner compartment of the valve is dirty
	Manual control locked

9.2.1 Repairs

Repairs may only be carried out by the manufacturer. Operating data may change if spare parts are replaced by the user.

10 TRANSPORTATION, STORAGE, DISPOSAL

NOTE!

Transport damage.

Inadequately protected devices may be damaged during transportation.
- Protect the device against moisture and dirt in shock-resistant packaging during transportation.
- Prevent the temperature from exceeding or dropping below the permitted storage temperature.

Incorrect storage may damage the device.
- Store the device in a dry and dust-free location.
- Storage temperature -40 – +80°C.

Damage to the environment caused by parts contaminated with media.
- Dispose of the device and packaging in an environmentally friendly manner.
- Observe applicable disposal and environmental regulations.

PART 7: WARRANTY INFORMATION

OWNER'S LIMITED WARRANTY

Dometic Corporation (Dometic) warrants to the original purchaser/owner, and to subsequent owners during the applicable Limited Warranty Period, Dometic's Water Purification Products, Pumps, Related Accessories and Replacement Parts against failure from defects in material or workmanship arising in the periods specified in the Table of Limited Warranty Periods below. If a covered product or part fails during the applicable warranty period, Dometic will remedy same by repairing or replacing the defective warranted product or part as outlined below in the Table of Limited Warranty Periods. Defective parts shall be replaced free of charge and labor shall be paid for by Dometic only as set forth in the Table. Dometic reserves the right to refund the purchase price of the subject product or part as an alternative remedy to repair or replacement. The remedy allowed hereunder (repair, replacement or refund) shall be at Dometic's sole option.

SECTION I

WHAT'S COVERED

What does the Limited Warranty cover?

Water Purification Products, Pumps, Related Accessories and Replacement Parts manufactured and/or marketed by Dometic for the durations set forth in the Table of Limited Warranty Periods.

What is disclaimed, and are the warranties and remedies exclusive of all others?

Dometic does not disclaim the implied warranty of merchantability, but limits the duration of that implied warranty to the duration of the Limited Warranty offered herein.

This Limited Warranty, as well as the implied warranty of merchantability and the remedies offered by Dometic herein, are EXCLUSIVE and are made or provided in lieu of all other express or implied warranties, obligations, or liabilities. In no event shall Dometic be responsible or liable for any incidental or consequential damages alleged to have resulted from any defect in or failure of any warranted product or part. In those instances in which a cash refund is made, **such refund shall effect the cancellation of the contract of sale and such refund shall constitute full and final satisfaction of all claims which the purchaser has or may have against Dometic due to any actual or alleged breach of warranty, either express or implied, including, without limitation, the implied warranty or merchantability or fitness for a particular purpose.** Some states do not allow the exclusion or limitation of incidental or consequential damages so the above limitation may not apply to you. Some states do not allow limitations on how long an implied warranty lasts, so the above limitation may not apply to you.

The Dealer is not an agent for Dometic, except for the purpose of administering the above warranty to the extent herein provided. Dometic does not authorize the dealer or any other person to assume for Dometic any liability in connection with such warranty, or any liability or expense incurred in the replacement or repair of its products other than those expressly authorized herein. Dometic shall not be responsible for any liability or expense except as is specifically authorized and provided herein.

Dometic reserves the right to improve its products, through changes in design or material without being obligated to incorporate such changes in products of prior manufacture. Dometic can make changes at any time in design, materials, or part of units of any one, model year, without obligation or liability to owners of units of the same year's model of prior manufacture.

This warranty gives you, the purchaser/owner, specific legal rights, and you may also have other rights which vary from state to state.

OWNER'S LIMITED WARRANTY

SECTION II

WHAT'S NOT COVERED

What does this Limited Warranty not cover?

This Warranty Shall Not Apply to:

1. Failures resulting from improper installation or use contrary to instructions.
2. Failures resulting from abuse, misuse, accident, fire, or submergence.
3. Any part manufactured by Dometic, which shall have been altered so as to impair its original characteristics.
4. Any parts which fail as a result of misuse, improper application or improper installation.
5. Items not manufactured by Dometic, i.e., items, which are purchased from another manufacturer and supplied as received by Dometic without alteration or modification except as any part of a Dometic manufactured unit or component.
6. Components or parts used by or applied by the purchaser, as an integral part of products not manufactured by Dometic.
7. Labor resulting from difficult access to a Dometic product. The original installer or OEM is responsible for accessibility of unit.
8. Leaks due to improper installation of system, for example: hose clamps, fittings, flare nuts, quick disconnects.
9. Freight Damage.
10. Pumps that have been run dry, are water damaged or have blown freeze plugs.
11. Pumps with cracked heads.
12. Pump seals are not covered.
13. UV light bulbs are not covered.
14. Sea strainer elements are not covered.
15. Cartridge filter elements are not covered.
16. Sand & gravel in a multi-media filter are not covered.
17. Pump packing assemblies are not covered.
18. Pump valve assemblies are not covered.
19. Pump crankcase oil is not covered.
20. Gauge instrument calibration is not covered.
21. Fuses are not covered.
22. Valve seals and packings are not covered.
23. Exterior corrosion is not covered.
24. Membrane elements are not covered.
25 Logic boards with water damage.
26. Logic boards with blown MOV's (Power Surge)
27. Mis-programmed displays.
28. Displays or remotes with water damage.
29. Failures due to improper winterization.
30. Unit damage as a result of improper return packaging.
31. Travel costs are included in the hourly labor allowances and should not be billed as a separate item without preapproval from the factory.

<u>Installation and application of Dometic components are not warranted by Dometic, because Dometic has no control or authority over the selection, location, application, or installation of these components.</u>

OWNER'S LIMITED WARRANTY

SECTION III

COVERAGE PERIOD

What is the period of coverage?

SEE TABLE OF LIMITED WARRANTY PERIODS BELOW.

How does one determine when the Limited Warranty Period begins? All Dometic products bear a data plate on which there are model and serial numbers. The date of manufacture of the product can be determined by Dometic based on the serial number on the product. To determine whether or not any Dometic component is in warranty, proceed as follows:

1. Determine the model and serial number on the data plate located on the product. Write or call the Dometic Customer Service Department to obtain the manufacture date of the product. The hours of the Customer Service Department are 8:00 a.m. - 5:00 p.m. (USA, Eastern Standard Time Zone) Monday through Friday excluding holidays.

2. It is possible that a considerable time lag exists between the date a product or component is manufactured and the date it is put in service. In such instances, the date of manufacture could indicate that the item is out of warranty. However, based on the date the equipment is first put in service, the item may still be covered by the Dometic Limited Warranty. For proof of date put in service, Dometic will require a copy of the bill of sale of the Dometic equipment from the installer or new boat dealer to the original owner.

OWNER'S LIMITED WARRANTY

SECTION IV

GETTING COVERED WARRANTY SERVICE

How does the purchaser/owner get warranty service?

Please read the following Warranty Procedure: If the failure of a Dometic component is determined to be covered under the Dometic warranty and the time in service is determined to be within the warranty time limit, the owner has the following three options:

1. Preferred option: Have a Dometic authorized Servicing Dealer, perform the work needed. The customer needs to call Dometic Customer Service Department for a recommendation as to the closest dealer. If the customer already knows an authorized servicing dealer, the dealer should be contacted directly.

2. Second option: If the customer contacts Dometic Service Department for a Servicing Dealer and Dometic has no one in that particular area, Dometic will authorize the use of a local service company and Dometic will work with the local company to assist in any way possible.

The customer may contact the Dometic Service Department at 1(800) 542-2477, Monday through Friday, 8:00am - 5:00pm.

TABLE OF LIMITED WARRANTY PERIODS

Important Notes Regarding Product Start-up/ Commissioning:

1. Warranty periods begin from the date of possession of the boat/vessel by the first owner if OEM installed or date of installation if dealer installed, but not to exceed three (3) years from date of production of the product. However, if the product is started for any reason by the OEM or dealer, notwithstanding any provision to the contrary, the warranty period will be for a period of one (1) year commencing from the date that the product was started by the OEM or dealer. The warranty is transferable and will carry the remainder of the original owner's warranty based on the original date of purchase or date of installation.

2. Proof of purchase or installation may be required to verify warranty coverage.

3. Any unit or replacement part installed due to a warranty failure carries the remainder of the original warranty. Warranty coverage does not start over from the repair/replacement date.

4. Warranty coverage shall not exceed three (3) years from the date of production of the product.

5. These warranty periods are effective February 1, 2014.

WATER PURIFICATION PRODUCTS:
PRODUCT SALE TYPE WARRANTY COVERAGE

Spot Zero OEM 1-year warranty, parts and labor, from date of delivery of vessel. Not to exceed 3 years from date of production of product, and subject to **Important Notes above**. Pump warranty, see Pump section.

Dealer Installed 1-year warranty, parts and labor, from date of installation. Not to exceed 3 years from date of production of product, and subject to **Important Notes above**. Pump warranty, see Pump section.

Sea Xchange OEM 1-year warranty, parts and labor, Not to exceed 3 years from date of production of product, and subject to **Important Notes above**. Pump warranty, see Pump section.

Dealer Installed 1-year warranty, parts and labor, from date of installation. Not to exceed 3 years from date of production of product, and subject to **Important Notes above**. Pump warranty, see Pump section.

(SE SERIES, SX SERIES FROM DATE OF DELIVERY OF VESSEL. XTC SERIES, CX SERIES)

PUMPS, ACCESSORIES, REPLACEMENT PARTS:
PRODUCT SALE TYPE WARRANTY COVERAGE

Pumps OEM or Dealer Installed 1 year warranty, parts and labor. Wearable parts such as pump seals, brushes and plastic valves are not covered under warranty.

SECTION IV (CONTINUED)

Dealer Installed and 1 year warranty, parts only. Wearable parts such as pump seals, brushes and plastic valves are not covered under warranty.

Accessories OEM, Dealer Installed, 1 year warranty, parts only.

Replacement Parts Aftermarket sales. 90-Day warranty, parts only.

This Page Intentionally Left Blank