16

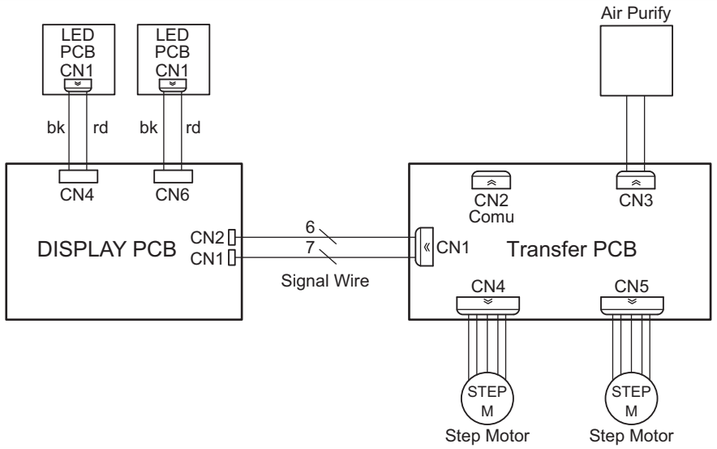

17

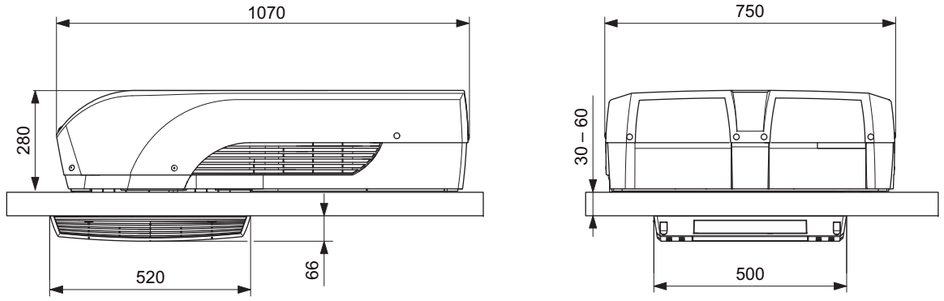

Dometic

Dometic Australia Pty. Ltd.
1 John Duncan Court
Varsity Lakes QLD 4227

www.dometic.com.au

4445101392F 02/2016

Dometic

Harrier, Harrier Inverter

1

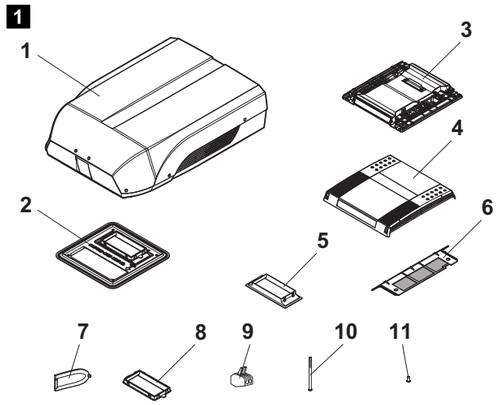

2

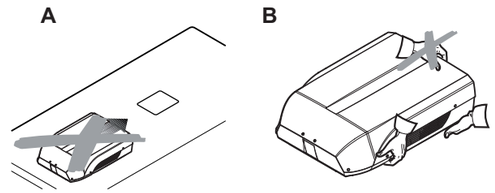

3

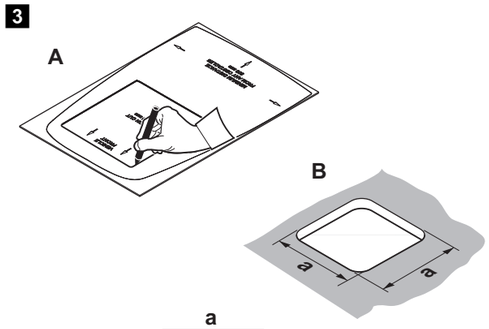

a
360 mm
400 mm

4

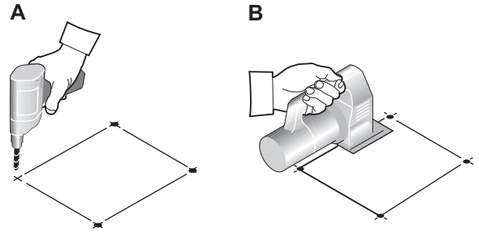

5

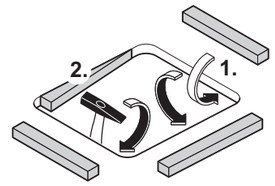

6

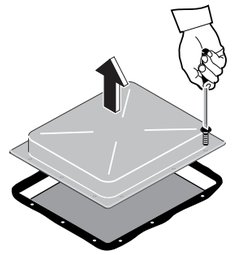

7

8

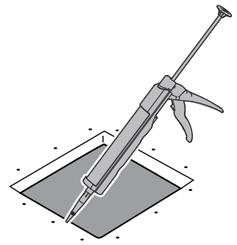

9

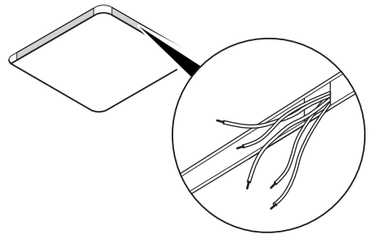

10

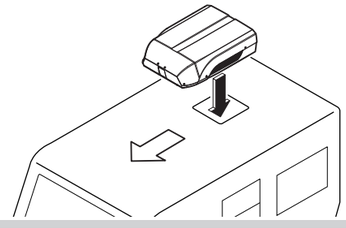

11

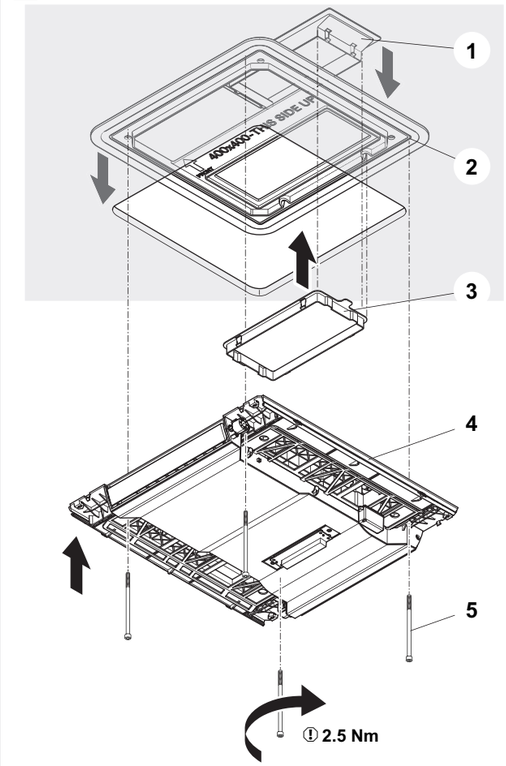

12

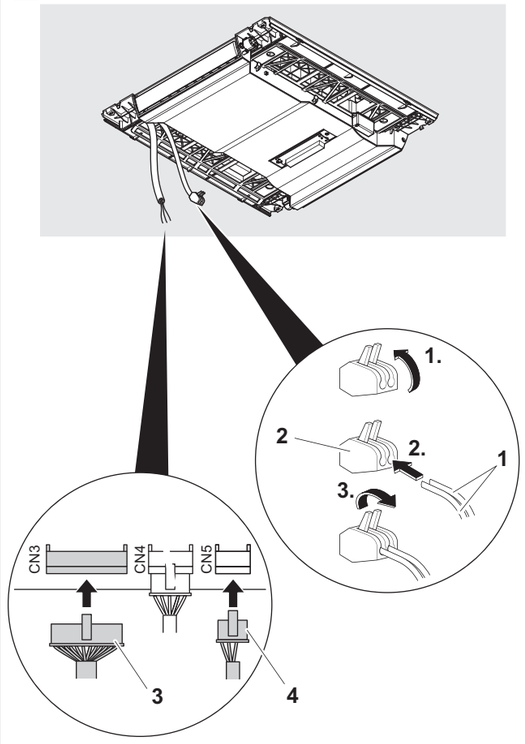

13

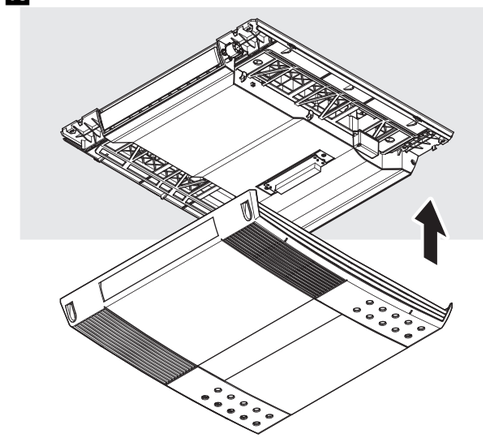

14

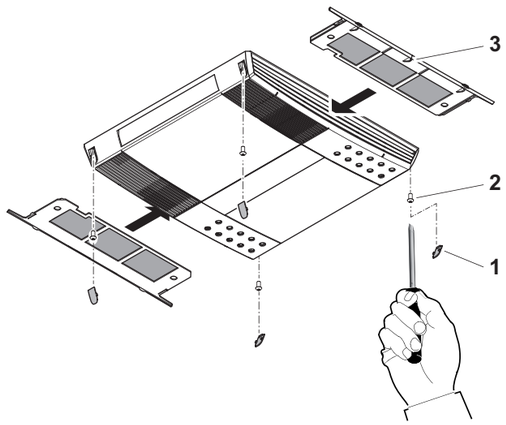

15

Harrier Inventer

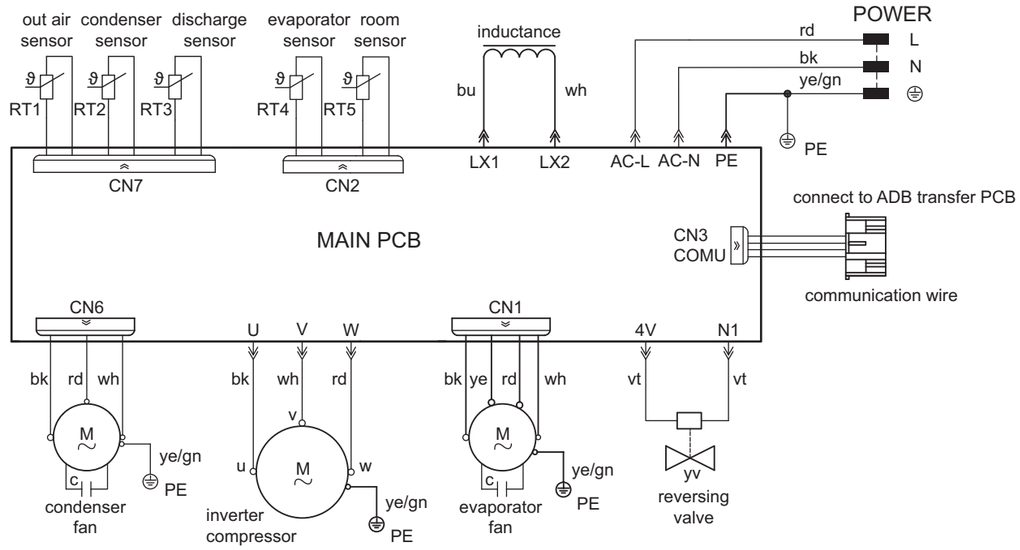

Harrier

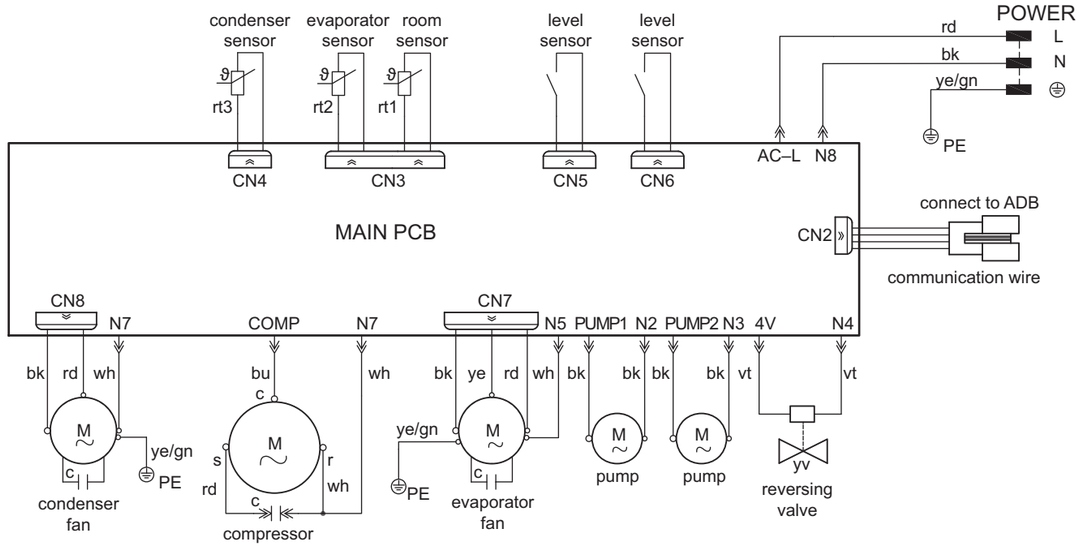

bk	Black
bu	Blue
gn	Green
rd	Red
vt	Violet
wh	White
ye	Yellow

Dometic

EN

Air conditioning roof unit

Installation Manual. 3

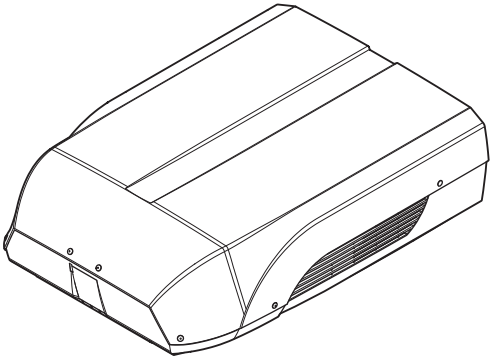

Dometic Harrier, Harrier Inverter

Please read this instruction manual carefully before installation and start-up, and store it in a safe place. If you pass on the device to another person, hand over this instruction manual along with it.

Table of contents

1 Explanation of symbols 3
2 Safety and installation instructions. 4
3 Target group for this instruction manual 7
4 Scope of delivery 7
6 Intended use 8
7 Labels 8
8 Installation 9
9 Troubleshooting 15
10 Disposal 17
11 Technical data 19

1 Explanation of symbols

DANGER!
Safety instruction: Failure to observe this instruction will cause fatal or serious injury.

WARNING!
Safety instruction: Failure to observe this instruction can cause fatal or serious injury.

CAUTION!
Safety instruction: Failure to observe this instruction can lead to injury.

NOTICE!
Failure to observe this instruction can cause material damage and impair the function of the product.

NOTE
Supplementary information for operating the product.

➤ **Action:** This symbol indicates that action is required on your part. The required action is described step-by-step.

✓ This symbol describes the result of an action.

Fig. 1 5, page 3: This refers to an element in an illustration. In this case, item 5 in figure 1 on page 3.

2 Safety and installation instructions

Please observe the prescribed safety instructions and stipulations from the vehicle manufacturer and service workshops.

The manufacturer accepts no liability for damage in the following cases:

- Faulty assembly or connection
- Damage to the product resulting from mechanical influences and excess voltage
- Alterations to the product without express permission from the manufacturer
- Use for purposes other than those described in the operating manual

Note the following basic safety information when using electrical devices to protect against:

- Electric shock
- Fire hazards
- Injury

2.1 Handling the device

WARNING!

- Installation and repair of the roof air conditioner may only be carried out by qualified personnel who are familiar with the risks involved and the relevant regulations. Inadequate repairs may cause serious hazards. For repair service, please contact the service centre in your country (addresses on the back page).
- **Electrical devices are not toys.**
  Keep electrical devices out of reach of children or infirm persons. Do not allow them to use electrical devices without supervision.
- Persons whose physical, sensory or mental capabilities or whose lack of experience and knowledge prevent them from using the device safely should not use it without supervision or instruction by a responsible person.
- Do **not** undo the upper cover of the roof air conditioner in the event of a fire. Use approved extinguishing agents instead. Do not use water to extinguish fires.

CAUTION!

- The roof air conditioner must be installed securely so that it cannot fall down.
- Only operate the roof air conditioner if you are certain that the housing and the cables are not damaged.
- Do not use the roof air conditioner near flammable fluids or in closed rooms.
- Make sure no combustible objects are stored or installed near the air outlet. A distance of at least 50 cm must be kept.
- Do not reach into air outlets or insert any foreign objects in the device.

NOTICE!

- Only use the device as intended.
- The roof air conditioner is not suitable for use in agricultural or construction vehicles.
- Do not make any alterations or conversions to the device.
- Never drive through automatic car washes when the roof air conditioner is mounted.
- If faults occur in the refrigerant circuit, the system must be checked by a specialist company and repaired properly. The refrigerant must never be released into the air.

NOTE

- Please ask your vehicle manufacturer if a technical inspection is required after fitting an air conditioner and whether the height entered in the vehicle documents needs to be altered:
  – Harrier Series: increased height 255 mm

2.2 Handling electrical cables

WARNING!

- The electrical power supply may only be connected by a qualified electrician.

CAUTION!

- Fit a fuse of at least 10 A to the connection with the vehicle's power supply.
- Attach and lay the cables so that they cannot be tripped over or damaged.

NOTICE!

- Use cable ducts to lay cables through walls with sharp edges.
- Do not lay loose or bent cables next to electrically conductive materials (metal).
- Do not pull on the cables.

3 Target group for this instruction manual

The instructions in this manual are intended for qualified personnel at workshops who are familiar with the guidelines and safety precautions to be applied.

4 Scope of delivery

No. in fig. 1	Number	Description
1	1	Roof air conditioner
2	1	Roof frame
3	1	Ceiling plate
4	1	ADB cover
5	1	Duct insert
6	2	Air filter
7	4	Screw hole cover
8	1	Transition duct
9	3	Cable connector
10	4	Long fastening bolt
11	4	Fastening screw

5 Accessories

Available as accessories (not included in the scope of delivery):

Description
Seal – thicker roof

If you have questions in respect of the accessories, please contact your local service partner.

6 Intended use

The Dometic Harrier series roof air conditioner can condition the interior of campers and caravans with cool or warm dehumidified air.

The roof air conditioner is **not** suitable for installation in construction machines, agricultural machines or similar equipment. It will not work properly if exposed to strong vibrations.

Do **not** operate the roof air conditioner if the ambient temperature is above 52 °C.

NOTE
You can find additional information on roof air conditioners in the operating manual, such as the technical description or the controls.

7 Labels

Labels are attached to the Dometic Harrier series roof air conditioners. These labels provide the user and fitter with information on specifications of the device.

8 Installation

CAUTION! Beware of injury
The roof air conditioner may only be installed by qualified personnel. The following information is intended for technicians who are familiar with the guidelines and safety precautions to be applied.

8.1 Note on installation

Read this installation manual completely before installing the roof air conditioner.

The following tips and instructions must be observed while installing the roof air conditioner:

DANGER! Danger of electrocution
Disconnect all power supplies when working on the roof air conditioner.

CAUTION! Beware of injury
- Improper installation of the roof air conditioner can result in irreparable damage to the device and put the safety of the user at risk.
- The manufacturer assumes no liability for malfunctions and for the safety of the roof air conditioner, especially for injury and/or damage to property, if the roof air conditioner is not fitted in accordance with these installation instructions.
- Always wear the recommended protective clothing (e.g. protective goggles, gloves).

NOTICE! Beware of damage
- Observe the structural engineering of the vehicle and seal of all openings made when installing the roof air conditioner.
- Check whether the roof of the vehicle is able to support the weight of a person before climbing onto it. Ask the vehicle manufacturer about the permissible roof loads.

Note on transport

- Always have someone help you carry the roof air conditioner.
- Always lift the roof air conditioner to move it and never drag it over the roof (fig. **2** **A**).
- Do not use the rear or side ventilation slots to lift it (fig. **2** **B**).

Note on installation location

- Before installing the roof air conditioner, check whether any vehicle components could be damaged by the installation of the roof air conditioner (such as lamps, cupboards, doors).
- Before installation, find out (by consulting the manufacturer of the vehicle) whether the construction is designed for the static weight and the loads of the air conditioner when the vehicle is in motion. The manufacturer of the roof air conditioner assumes no liability whatsoever.
- The vehicle manufacturer may have already provided points where the opening for the installation of the roof air conditioner can be made without any risk of weakening the construction or cutting power cables. If not, fitment of a roof H-frame may be required. These are available separately.
- Select a flat and sufficiently level area at the centre of the vehicle roof between two longitudinal sections for installation.
- The roof inclination of the installation surface may not exceed 10°.
- Make sure no combustible objects are stored or installed near the air outlet. A distance of at least 50 cm should be kept.
- Make sure that there are no objects within the vehicle which could obstruct the attachment of the air outlet unit or the cooled air from flowing through the swivelling air distribution nozzles.
- For safety reasons, note the location of existing wiring harnesses, wires and other components within the installation area, in particular those which are not visible, when installing the roof air conditioner (when drilling or screwing etc.).

Note on electrical system

- Only a qualified electrician should connect the roof air conditioner to the electrical power.
- Check that the voltage specification on the type plate is the same as that of the power supply.
- Do not lay cables which are loose or bent next to electrically conductive material (metal).
- Install an all-pole switch with a contact opening width of at least 3 mm on the installation side.

There are two ways of installing the roof air conditioner:

- Making a new opening (chapter “Making a new opening” on page 11). In this case the opening must be reinforced by an appropriate frame.
- Using the existing roof hatch openings (ventilation hatch) in the vehicle (chapter “Installing in an existing opening” on page 12).

8.2 Making a new opening

See fig. 3

➤ Select an area at the centre on the roof between two longitudinal supports.

➤ Mark the position and size of the opening using the template included in the packaging (**A** and **B**).

See fig. 4

➤ Drill out the corners (**A**).

➤ Carefully cut out the opening on the roof using a keyhole saw or a similar tool (**B**).

Make sure no electrical power cables are damaged.

See fig. 5

➤ Before installation, check whether the roof hole needs reinforcing.

➤ Frame the opening with appropriate sized wood or steel members to prevent collapsing when clamping the air conditioner.

➤ If needed, fit a suitable H-frame to provide re-enforcement to the roof.

8.3 Installing in an existing opening

NOTE

- Existing roof openings in accordance with fig. **3** are suitable for installing the roof air conditioner.
- Dispose of all waste material, glue, silicone and seals separately. Observe the disposal guidelines.
- The manufacturer only assumes liability for parts included in the scope of delivery. The validity of the warranty expires if the device is installed together with third-party parts.

See fig. 6

➤ Remove all screws and fixtures of the existing roof hatch or an old air conditioner.

➤ Take out the roof hatch or old air conditioner.

See fig. 7

➤ Remove any sealant around the opening using a scraper or similar tool.

See fig. 8

NOTICE!
Observe the sealant manufacturer's instructions.

➤ Seal any screw holes and recesses with a flexible non-hardening butyl sealing compound (e.g. SikaLastomer-710, Selleys Butyl Mastic, Bostik ezycaulk butyl sealant or similar).

8.4 Laying the connecting cables

DANGER! Danger of electrocution
Make sure there is no voltage at electrically operated components before carrying out work on them!

The roof air conditioner must be connected to an electric circuit which is able to supply the required current (see chapter "Technical data" on page 19).

➤ Select the cross-section of the cable corresponding to the length:
  – Length < 7.5 m: 1.5 mm²
  – Length > 7.5 m: 2.5 mm²

See fig. 9

➤ Make an opening on one side in order to feed through the electrical power supply cable.

➤ Feed the 240 V∼ cable through the opening into the vehicle interior.

8.5 Installing the roof air conditioner ADB

NOTICE! Risk of damage
Observe the structural strength of the roof of the vehicle. The roof of the vehicle must be able to bear the weight of the roof air conditioner. The roof must not be indented or deformed by the weight of the unit, even over a longer period of time.

Attaching the roof air conditioner

See fig. 11

➤ Fit the roof frame (**2**) onto the roof of the vehicle over the opening.

NOTE
Ensure the roof frame is oriented correctly based on opening size otherwise this will cause problems with installation later (refer to markings on the plate).

➤ Seal it with flexible, non-hardening butyl sealing compound.

➤ Position the duct insert (**1**) into the roof frame (**2**).

➤ Lift the roof air conditioner onto the roof of the vehicle.

➤ Position the roof air conditioner over the installation opening.
Observe the direction of travel.

➤ Choose the suitable duct seal in accordance with the following table:

Roof thickness	Seal type
30 – 60 mm	transition duct
60 – 100 mm	seal – thicker roof (transition duct not required)

NOTE
For the thicker roof seal refer to the instructions included with the seal kit.

➤ Clip the transition duct (**3**) in place over the duct insert (**1**).

NOTE
Ensure the transition duct or seal is located correctly over the duct insert, otherwise the performance of the unit may be affected.

➤ Raise the ceiling plate (**5**) into position and clip the transition duct into place.

➤ The 4 bolts (**4**) are used to clamp the rooftop unit and ceiling plate into place.

NOTICE! Risk of damage
- Tighten to the specified torque.
- Ensure all 4 bolts are tightened by the same amount. Uneven tightening can cause distortion of the roof air conditioner and result in possible damage.

➤ Tighten the bolts using a torque spanner and a fastening torque of 2.5 Nm.

Electrical connection

The complete circuit diagram can be found in fig. **15**.

See fig. 12

240 V∼ cable

➤ Connect the roof air conditioner with the 240 V∼ voltage supply.
Connect the cables (**1**) to a cable connector (**2**).

Connecting the circuit board

➤ Connect to the ADB ceiling plate:
- the white 13-pin connector from the ADB cover (**3**)
- the black 4-pin connector from the rooftop unit (**4**)

8.6 Installing the ADB cover

See fig. 13

➤ Place the ADB cover over the ceiling plate.

See fig. 14

➤ Fix the ADB cover using the 4 screws (**2**) provided.

➤ Install the screw covers (**1**) over the opening.

➤ Insert the 2 air filter elements (**3**).

➤ Enter the new vehicle height and weight in the vehicle documents (if required).

9 Troubleshooting

Problem	Cause	Remedy
Roof air conditioner constantly switches itself off.	Icing sensor has tripped.	Outer temperature is too low or all air nozzles are closed.
Not cooling well	The roof air conditioner is not set to cooling.	➤ Set the roof air conditioner to cooling.
	The ambient temperature is above 52 °C.	The roof air conditioner is only designed for ambient temperatures of up to 52 °C.
	The temperature set is higher than the room temperature.	➤ Select a lower temperature.
	The ambient temperature is below 16 °C.	The roof air conditioner is only designed for ambient temperatures above 16 °C.
	One of the temperature sensors is defective.	➤ Contact an authorised service agent or Dometic.
	The evaporator fan is damaged.	
	The condenser fan is damaged.	

Problem	Cause	Remedy
Not heating well	The roof air conditioner is not set to heating.	➤ Set the roof air conditioner to heating.
	The ambient temperature is below –2 °C.	The roof air conditioner will only heat at ambient temperatures above –2 °C.
	The temperature set is lower than the room temperature.	➤ Select a higher temperature.
	One of the temperature sensors is defective.	➤ Contact an authorised service agent or Dometic.
	The evaporator fan is damaged.	
	The condenser fan is damaged.	
Low air output	The air intake grilles are blocked or obstructed.	➤ Remove any leaves and other dirt from the ventilation grilles of the roof air conditioner.
	The blower is defective.	➤ Contact an authorised service agent or Dometic.
Water enters the vehicle	The condensation water drainage openings are clogged up.	➤ Clean the drainage openings for condensation water.
	The seals are damaged.	➤ Contact an authorised service agent or Dometic.
Roof air conditioner does not switch on.	No supply voltage (240 V∼) connected.	➤ Check the power supply.
	The voltage is too low (under 200 V∼). The voltage converter is defective.	➤ Contact an authorised service agent or Dometic.
	One of the temperature sensors is defective.	
	The electrical fuse of the power supply is too low.	➤ Check the electrical fuse of the power supply.
Roof air conditioner does not switch off.	One of the temperature sensors is defective.	➤ Contact an authorised service agent or Dometic.
	The electrical fuse of the power supply is too low.	➤ Check the electrical fuse of the power supply.

10 Disposal

Regulations for environmental safety and correct disposal

All organisations must apply a set of procedures to identify, evaluate and control the influence that their activities (manufacturing, products, services, etc.) have on the environment.

The procedures to be followed to identify significant environmental impact must take the following factors into account:

- use of raw materials and natural resources
- atmospheric emissions
- discharge of liquids
- waste management and recycling
- contamination of the soil

In order to minimise environmental impact, the manufacturer provides a series of indications here below that should be taken into account by all those who, for whatever reason, interact with the appliance during its working life.

- All packing components must be disposed of (preferably recycled) in compliance with statutory legislation in the country in which disposal takes place.
- All product components must be disposed of (preferably recycled) in compliance with statutory legislation in the country in which disposal takes place.
- For correct disposal, the appliance must be consigned to an authorised waste disposal company to ensure that all recyclable components are reused and the remaining materials are processed properly.
- During installation ensure the room has adequate ventilation to prevent the build-up of stale air that might be harmful to the health of the operators.
- During operation and maintenance ensure that any waste pollutant products (oil, grease, etc.) are disposed of correctly.
- Keep noise levels down to reduce noise pollution.

For more information on correct dismantling of our products please refer to the recycling handbooks at www.dometic.com.

➤ Place the packaging material in the appropriate recycling waste bins wherever possible.

➤ When in operation or undergoing repairs and maintenance work, make sure that the refrigerant circuit is not damaged and refrigerant cannot escape. It acts as a greenhouse gas and should not be allowed into the environment.

Any person who handles or works on equipment containing refrigerant in Australia must have an appropriate refrigerant handling license.

This includes:

- decanting the refrigerant
- manufacturing, installing, commissioning, servicing or maintaining equipment regardless of whether it is charged with refrigerant or not
- decommissioning or disposing of equipment where refrigerant is present

Discharge of refrigerant into the atmosphere is against the law. Severe penalties apply.

If you wish to finally dispose of the product, ask your local recycling centre or specialist dealer for details about how to do this in accordance with the applicable disposal regulations.

➤ Dispose of the product at an official waste disposal facility in accordance with the applicable recycling or disposal guidelines.

Protect the environment!
Do not dispose of any batteries with general household waste. Return defective or used batteries to your retailer or dispose of them at collection points.

11 Technical data

	Dometic Harrier Inverter	**Dometic Harrier**
Item no.:	CK36H401RI	CK30H401R
Compressor rated capacity:	3675 W	2594 W
Cooling capacity based on ISO 5151:	3124 W	2486 W
Heating capacity based on ISO 5151:	2827 W	2214 W
Rated input voltage:	230 V∼ / 50 Hz	
Power consumption in cooling mode:	6.5 A	5.3 A
Power consumption in heating mode:	5.2 A	4.6 A
Operating temperature range:	–2 °C to +52 °C	
Refrigerant:	R-410a	R-410a
Blower:	3 blower levels 1 Automatic mode	
Suggested max. vehicle length (with insulated walls):	≥ 7.5 m	≤ 7.5 m
Dimensions L x W x H (mm):	1070 x 750 x 280 mm (height above vehicle roof)	
Weight:	approx. 45 kg	approx. 45 kg
Inspection/certification:		

Dometic

AUSTRALIA
Dometic Australia Pty. Ltd.
1 John Duncan Court · Varsity Lakes QLD 4227
☏ 1800 212121 · 🖷 +61 7 55076001
Mail: sales@dometic.com.au

AUSTRIA
Dometic Austria GmbH
Neudorferstraße 108
A-2353 Guntramsdorf
☏ +43 2236 908070
🖷 +43 2236 90807060
Mail: info@dometic.at

BENELUX
Dometic Branch Office Belgium
Zincstraat 3
B-1500 Halle
☏ +32 2 3598040
🖷 +32 2 3598050
Mail: info@dometic.be

BRAZIL
Dometic DO Brasil LTDA
Avenida Paulista 1754, conj. 111
SP 01310-920 Sao Paulo
☏ +55 11 3251 3352
🖷 +55 11 3251 3362
Mail: info@dometic.com.br

DENMARK
Dometic Denmark A/S
Nordensvej 15, Taulov
DK-7000 Fredericia
☏ +45 75585966
🖷 +45 75586307
Mail: info@dometic.dk

FINLAND
Dometic Finland OY
Mestarintie 4
FIN-01730 Vantaa
☏ +358 20 7413220
🖷 +358 9 7593700
Mail: info@dometic.fi

FRANCE
Dometic SAS
ZA du Pré de la Dame Jeanne
B.P. 5
F-60128 Plailly
☏ +33 3 44633525
🖷 +33 3 44633518
Mail : vehiculesdeloisirs@dometic.fr

GERMANY
Dometic WAECO International GmbH
Hollefeldstraße 63
D-48282 Emsdetten
☏ +49 (0) 2572 879-195
🖷 +49 (0) 2572 879-322
Mail: info@dometic-waeco.de

HONG KONG
Dometic Group Asia Pacific
Suites 2207-11 · 22/F · Tower 1
The Gateway · 25 Canton Road,
Tsim Sha Tsui · Kowloon
☏ +852 2 4611386
🖷 +852 2 4665553
Mail: info@waeco.com.hk

HUNGARY
Dometic Zrt. Sales Office
Kerékgyártó u. 5.
H-1147 Budapest
☏ +36 1 468 4400
🖷 +36 1 468 4401
Mail: budapest@dometic.hu

ITALY
Dometic Italy S.r.l.
Via Virgilio, 3
I-47122 Forlì (FC)
☏ +39 0543 754901
🖷 +39 0543 754983
Mail: vendite@dometic.it

JAPAN
Dometic KK
Maekawa-Shibaura, Bldg. 2
2-13-9 Shibaura Minato-ku
Tokyo 108-0023
☏ +81 3 5445 3333
🖷 +81 3 5445 3339
Mail: info@dometic.jp

MEXICO
Dometic Mx, S. de R. L. de C. V.
Circuito Médicos No. 6 Local 1
Colonia Ciudad Satélite
CP 53100 Naucalpan de Juárez
Estado de México
☏ +52 55 5374 4108
🖷 +52 55 5393 4683
Mail: info@dometic.com.mx

NETHERLANDS
Dometic Benelux B.V.
Ecustraat 3
NL-4879 NP Etten-Leur
☏ +31 76 5029000
🖷 +31 76 5029019
Mail: info@dometic.nl

NEW ZEALAND
Dometic New Zealand Ltd.
Unite E, The Gate
373 Neilson Street
Penrose 1, Auckland
☏ +64 9 622 1490
🖷 +64 9 622 1573
Mail: customerservices@dometic.co.nz

NORWAY
Dometic Norway AS
Østerøyveien 46
N-3232 Sandefjord
☏ +47 33428450
🖷 +47 33428459
Mail: firmapost@dometic.no

POLAND
Dometic Poland Sp. z o.o.
Ul. Puławska 435A
PL-02-801 Warszawa
☏ +48 22 414 3200
🖷 +48 22 414 3201
Mail: info@dometic.pl

PORTUGAL
Dometic Spain, S.L.
Branch Office em Portugal
Rot. de São Gonçalo nº 1 – Esc. 12
2775-399 Carcavelos
☏ +351 219 244 173
🖷 +351 219 243 206
Mail: info@dometic.pt

RUSSIA
Dometic RUS LLC
Komsomolskaya square 6-1
RU-107140 Moscow
☏ +7 495 780 79 39
🖷 +7 495 916 56 53
Mail: info@dometic.ru

SINGAPORE
Dometic Pte Ltd
18 Boon Lay Way 06–140 Trade Hub 21
Singapore 609966
☏ +65 6795 3177
🖷 +65 6862 6620
Mail: dometic@dometic.com.sg

SLOVAKIA
Dometic Slovakia s.r.o. Sales Office Bratislava
Nádražná 34/A
900 28 Ivanka pri Dunaji
☏/🖷 +421 2 45 529 680
Mail: bratislava@dometic.com

SOUTH AFRICA
Dometic (Pty) Ltd.
Regional Office
South Africa & Sub-Saharan Africa
Unit 6-7 on Mastiff Linbro Park
2008 Johannesburg
☏ +27 11 4504978
🖷 +27 11 4504976
Mail: info@dometic.co.za

SPAIN
Dometic Spain S.L.
Avda. Sierra del Guadarrama, 16
E-28691 Villanueva de la Cañada
Madrid
☏ +34 902 111 042
🖷 +34 900 100 245
Mail: info@dometic.es

SWEDEN
Dometic Scandinavia AB
Gustaf Melins gata 7
S-42131 Västra Frölunda
☏ +46 31 7341100
🖷 +46 31 7341101
Mail: info@dometicgroup.se

SWITZERLAND
Dometic Switzerland AG
Riedackerstrasse 7a
CH-8153 Rümlang
☏ +41 44 8187171
🖷 +41 44 8187191
Mail: info@dometic.ch

UNITED ARAB EMIRATES
Dometic Middle East FZCO
P. O. Box 17860
S-D 6, Jebel Ali Freezone
Dubai
☏ +971 4 883 3858
🖷 +971 4 883 3868
Mail: info@dometic.ae

UNITED KINGDOM
Dometic UK Ltd.
Dometic House, The Brewery
Blandford St. Mary
Dorset DT11 9LS
☏ +44 344 626 0133
🖷 +44 344 626 0143
Mail: sales@dometic.co.uk

USA
Dometic RV Division
1120 North Main Street
Elkhart, IN 46515
☏ +1 574-264-2131

4445101392 ST0156 02/2016