DOMETIC

REFRIGERATION
10-SERIES

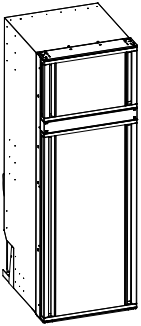

RCD10.5XES, RCD10.5XEG, RCD10.5XEP

EN **RE Compressor Refrigerators**
Installation and Operating Manual.....3

Copyright

© 2026 Dometic Group. The visual appearance of the contents of this manual is protected by copyright and design law. The underlying technical design and the products contained herein may be protected by design, patent or pending patent. The trademarks mentioned in this manual belong to Dometic Sweden AB. All rights are reserved.

English

1 Important notes....3
2 Explanation of symbols....3
3 Safety instructions....3
4 Explanation of symbols on the device....7
5 Scope of delivery....7
6 Accessories....7
7 Target groups....8
8 Intended use....8
9 Technical description....8
10 Installation....13
11 Operation....30
12 Cleaning and maintenance....40
13 Troubleshooting....41
14 Warranty....43
15 Disposal....43
16 Technical data....44

1 Important notes

Please read these instructions carefully and follow all instructions, guidelines, and warnings included in this product manual in order to ensure that you install, use, and maintain the product properly at all times. These instructions MUST stay with this product.

By using the product, you hereby confirm that you have read all instructions, guidelines, and warnings carefully and that you understand and agree to abide by the terms and conditions as set forth herein. You agree to use this product only for the intended purpose and application and in accordance with the instructions, guidelines, and warnings as set forth in this product manual as well as in accordance with all applicable laws and regulations. A failure to read and follow the instructions and warnings set forth herein may result in an injury to yourself and others, damage to your product or damage to other property in the vicinity. This product manual, including the instructions, guidelines, and warnings, and related documentation, may be subject to changes and updates. For up-to-date product information, please visit documents.dometic.com.

2 Explanation of symbols

A signal word will identify safety messages and property damage messages, and also will indicate the degree or level of hazard seriousness.

NOTE Supplementary information for operating the product.

3 Safety instructions

3.1 General safety

WARNING! Electrocution hazard

> Installation and removal of the refrigerator may only be carried out by qualified personnel.
> Installation in areas exposed to water must be performed by a qualified technician.
> If installing the refrigerator under a canopy or similar environment, ensure that the refrigerator is protected from rain and splashing water.
> Do not operate the refrigerator if it is visibly damaged.
> This refrigerator may only be repaired by qualified personnel. Improper repairs can result in considerable danger or damage to the refrigerator.
> If the power cable for this refrigerator is damaged, it must be replaced by the manufacturer, customer service or a similarly qualified person in order to prevent safety hazards.
> When positioning the refrigerator, ensure the supply cord is not trapped or damaged.

> Do not locate multiple portable socket-outlets or portable power supplies at the rear of the refrigerator.
> Do not touch exposed cables with your bare hands.
> Plug the device to sockets that ensure proper connection especially when the device needs to be grounded.
> If the device is powered by the mains, ensure that the power supply has a residual current circuit breaker (RCCB) or a ground fault circuit interrupter (GFCI). The installation must be carried out in accordance with all applicable regulations, especially in potentially damp areas.

WARNING! Fire hazard

> The refrigerant in the refrigerant circuit is highly flammable and in the event of a leakage combustible gases could build up if the appliance is in a small room. In the event of any damage to the refrigerant circuit:
  - Keep naked flames and potential ignition sources away from the refrigerator.
  - Ventilate the room well.
  - Switch off the refrigerator.
> The refrigeration circuit contains a small quantity of an environmentally friendly but flammable refrigerant. It does not damage the ozone layer and does not increase the greenhouse effect. Any leaking refrigerant may ignite.
> For refrigerators with flammable refrigerant: Do not use or store the refrigerator in confined spaces with none or minimal air flow.
> The insulation of the refrigerator contains flammable cyclopentane and requires special disposal procedures. Deliver the refrigerator at the end of its life-cycle to an appropriate recycling center.

WARNING! Explosion hazard

> Do not store any explosive substances, such as aerosol cans with propellants, in the refrigerator.

WARNING! Health hazard

> **For the European Union, UK and Turkey:** This device can be used by children aged from 8 years and above and persons with reduced physical, sensory or mental capabilities or lack of experience and knowledge if they have been given supervision or instruction concerning use of the device in a safe way and understand the hazards involved. **For all other regions:** This device is not intended for use by persons (including children) with reduced physical, sensory or mental capabilities, or lack of experience and knowledge, unless they have been given supervision or instruction concerning use of the device by a person responsible for their safety.
> Children aged from 3 to 8 years are allowed to load and unload the refrigerator.
> Cleaning and user maintenance shall not be made by children without supervision.
> Children must be supervised to ensure that they do not play with the refrigerator.

WARNING! Risk of child entrapment

> Ensure that the shelves are mounted and secured so that children cannot lock themselves in the refrigerator.
> Before disposing of your old refrigerator:
  - Dismantle the drawers.
  - Leave the shelves in the refrigerator so that children cannot climb inside.
> Take off the doors.

CAUTION! Health hazard

> To avoid a hazard due to instability of the refrigerator, it must be fixed in accordance with the installation instructions.

> Keep ventilation openings, on the refrigerator and in its enclosure or in the built-in structure, clear of obstruction.
> Do not use mechanical devices or other means to accelerate the defrosting process, other than those recommended by the manufacturer.
> Do not open or damage the refrigerant circuit under any circumstances.
> Do not use electrical devices inside the refrigerator unless they are recommended by the manufacturer for that purpose.

CAUTION! Risk of injury
> DO NOT USE OR STORE FLAMMABLE MATERIALS IN OR NEAR THIS REFRIGERATOR.
> DO NOT PLACE ARTICLES ON OR AGAINST THIS REFRIGERATOR.
> DO NOT MODIFY THIS REFRIGERATOR.

NOTICE! Damage hazard
> Only select operation with DC power supply if the vehicle engine is running and providing sufficient voltage, or if you are using a battery monitor.
> If present, keep the condensate drain clean at all times.
> If the refrigerator has ventilation grilles, do not use a high-pressure cleaner near the ventilation grille when cleaning the vehicle.
> The refrigerator shall not be exposed to rain.
> Never pull the plug out of the socket by the connection cable.

NOTICE! Damage hazard
> Check that the voltage specification on the data plate is the same as that of the power supply.
> Do not place the refrigerator near heat sources (heaters, direct sunlight, gas ovens, etc.).
> Attach the winter covers to the ventilation grille when the vehicle is cleaned from the outside or not used for a prolonged period of time.

WARNING! Hazard due to unprofessional maintenance
It is hazardous for anyone other than an Authorized Service Person to service this appliance.
> In Queensland the authorized Service Person MUST hold a Gas Work Authorization for hydrocarbon refrigerants to carry out maintenance or repairs where the gas system is being opened or charged.

3.2 Safety when installing

WARNING! Fire hazard
> Ensure clean and residue-free handling if silicon sealant or similar is used. There is a risk of fire if silicone filaments come into contact with hot parts or naked flames.
> Do not install the refrigerator near naked flames or other heat sources (heaters, direct sunlight, gas ovens etc.).
> Do not open the refrigerant circuit under any circumstances.

CAUTION! Risk of injury
> Do not put your fingers into the hinge.

NOTICE! Risk of overheating
> Always ensure sufficient ventilation so that the heat generated during operation can dissipate. Make sure that the device is sufficiently far away from walls and other objects so that the air can circulate.

3.3 Safety when operating

DANGER! Electrocution hazard

> Before starting the refrigerator, ensure that the power supply cable and the plug are dry.

CAUTION! Health hazard

> Ensure to put only items in the refrigerator which may be chilled at the selected temperature.
> Clean regularly surfaces that can come in contact with food and accessible drainage systems.
> Store raw meat and fish in suitable containers in the refrigerator, so that it is not in contact with and cannot drip onto other food.
> Opening the door for long periods can cause a significant increase of the temperature in the compartments of the refrigerator. If the refrigerator is left empty for long periods:
- Switch off the refrigerator.
- Defrost the refrigerator.
- Clean and dry the refrigerator.
- Leave the door open to prevent mold developing within the refrigerator. If available, put the refrigerator door and the freezer door into the storage position.

CAUTION! Risk of injury

> Do not put your fingers into the hinge.
> Close and latch the refrigerator door before beginning a journey.
> The cooling system at the back of the refrigerator becomes very hot during operation. If the refrigerator is equipped with ventilation grilles, protect yourself from contact with hot parts when removing the ventilation grilles.
> The device door or the freezer door can completely detach from the device if used incorrectly. Push the doors closed until you hear a clear click at the top and bottom.

NOTICE! Damage hazard

> Do not lean on the open refrigerator door.
> Store heavy objects such as bottles or cans only in the refrigerator door, in the vegetable compartment or on the bottom shelf.
> If the refrigerator has a double-sided door and the door is not locked correctly on the opposite side, push on that side at the top and the bottom until it locks in place.
> **Danger of overheating!** Always ensure sufficient ventilation so that the heat generated during operation can dissipate. Ensure that the refrigerator is sufficiently far away from walls and other objects so that the air can circulate.
> Do not fill the interior with ice or fluid.
> Protect the refrigerator and the cable against heat and moisture.
> Never pull the plug out of the socket by the connection cable.

NOTE

> If the battery management system of your vehicle shuts down the refrigerator to protect the battery, contact your vehicle manufacturer.
> For ambient temperatures of select the average temperature setting.
> If the door is not locked correctly on the opposite side, push on that side at the top and the bottom until it locks in place.

NOTE Food poisoning

Improper use of the refrigerator can lead to food spoilage, which can cause food poisoning.

> Keep temperature fluctuation as low as possible. Only open the freezer as often and for as long as necessary. Store the foodstuff in such a way that the air can still circulate well.

> Ensure to put only items in the refrigerator which may be chilled at the selected temperature.
> Store the different foodstuff types as shown in the figures.
> If the temperature can be adjusted: Adjust the temperature to the quantity and type of the foodstuff.
> Foodstuff can easily absorb or release odor or taste. Always store foodstuff covered or in closed containers/bottles.

WARNING! Hazard due to unprofessional maintenance
It is hazardous for anyone other than an Authorized Service Person to service this appliance.
> In Queensland the authorized Service Person MUST hold a Gas Work Authorization for hydrocarbon refrigerants to carry out maintenance or repairs where the gas system is being opened or charged.

3.4 Safety when operating with AC power

NOTICE! Damage hazard
> Check that the voltage specification on the data plate is the same as that of the power supply.
> Only use the cable supplied to connect the refrigerator to the AC mains.
> Never pull the plug out of the socket by the connection cable.

4 Explanation of symbols on the device

Warning! Risk of fire. Flammable materials.

5 Scope of delivery

Quantity	Description
1	Refrigerator
1	Drain hose
1	Sealing strip (fitted underneath during installation)
6	Installation bush cap
1	Installation and Operating Manual

6 Accessories

Available as accessories (not included in the scope of delivery):

Description
LS300 ventilation grille (W x H: 490 mm × 249 mm, open ventilation area 667 cm^2)
Roof vent kit
Internal ventilation kit

Accessories are available from specialist dealers. In case of questions, contact the dealer or your service partner directly.

7 Target groups

The electrical power supply must be connected by a qualified electrician who has demonstrated skill and knowledge related to the construction and operation of electrical equipment and installations and has received safety training to identify and avoid the hazards involved.

All other actions are intended also for non-professional users.

8 Intended use

The refrigerator is used for refrigerating foodstuffs and storing frozen foodstuffs and is suitable for RVs, motor homes, and boats.

The refrigerator is only suitable for installation in a fitted recess. Once it is installed, only the front of the refrigerator may be accessible.

This product is only suitable for the intended purpose and application in accordance with these instructions.

This manual provides information that is necessary for proper installation and/or operation of the product. Poor installation and/or improper operation or maintenance will result in unsatisfactory performance and a possible failure.

The manufacturer accepts no liability for any injury or damage to the product resulting from:

- Incorrect installation, assembly or connection, including excess voltage
- Incorrect maintenance or use of spare parts other than original spare parts provided by the manufacturer
- Alterations to the product without express permission from the manufacturer
- Use for purposes other than those described in this manual

Dometic reserves the right to change product appearance and product specifications.

9 Technical description

The device can refrigerate goods to 0°C … 8°C and keep them cool. Products can be kept frozen in the freezer compartment. The control display can be used to set the desired temperature.

The refrigerator supports 12 V⎓ / 24 V⎓ onboard power supply and is therefore suitable for mobile homes, RVs, boats, etc. It can also be connected to a 100 V∼ … 240 V∼ mains power supply.

When the refrigerator is installed with both DC and AC power connections, the power mode switches automatically to AC mode when AC is available.

The refrigerator can withstand a short-term inclination of 30 °, for example, when used on boats.

All materials used in the refrigerator are compatible with foodstuffs. The refrigerant circuit is hermetically sealed and CFC-free.

9.1 Components

Components of the refrigerator are shown as follows:

- Components of RCD10.5XES

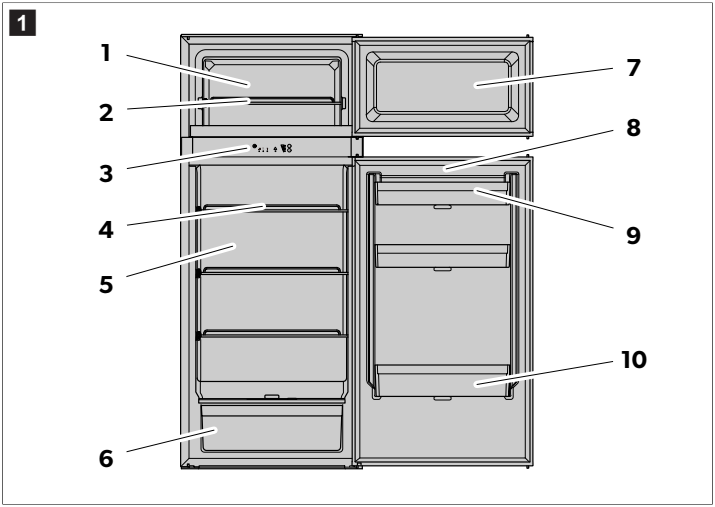

- Components of RCD10.5XEG, RCD10.5XEP

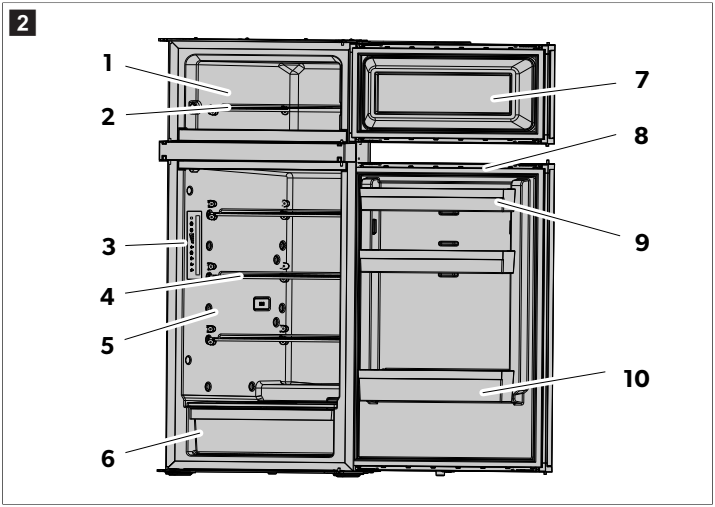

	Description	Quantity
1	Freezer compartment	1
2	Freezer compartment shelf	1
3	Operating and display elements	1
4	Refrigerator shelf	3
5	Refrigerator compartment	1
6	Fruit and vegetable section	1
7	Freezer compartment door	1
8	Refrigerator door	1
9	Top door bin	2
10	Bottom door bin with bottle holder	1

9.2 Operating and display elements

RCD10.5XES

The LED display features the following operating and display elements:

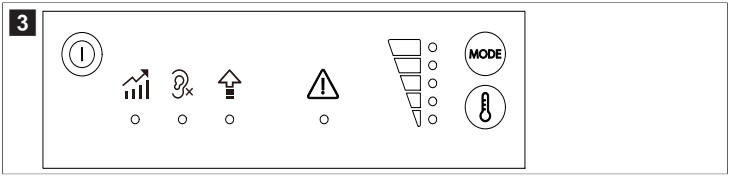

Symbol	Description
	ON/OFF button
	Performance mode
	Quiet mode
	Turbo mode
	Error warning
	Temperature indicator
MODE	Mode selection button
	Temperature selection button

RCD10.5XEG, RCD10.5XEP
The LED display features the following operating and display elements:

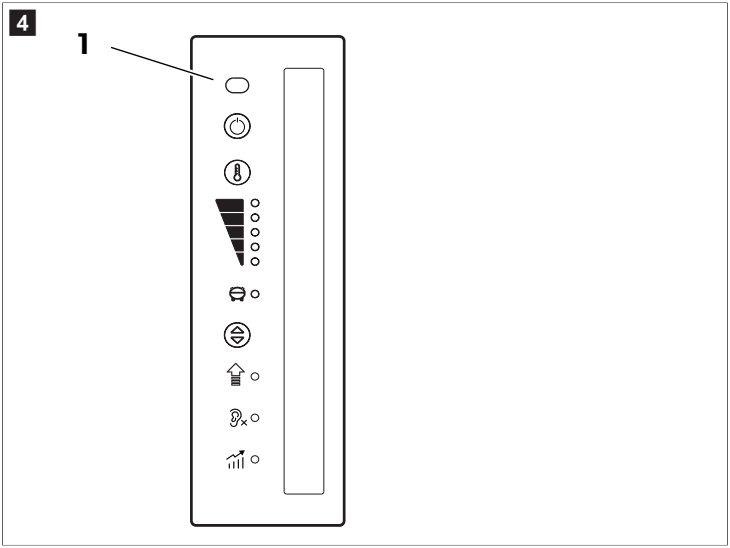

No./Symbol	Description
1	IR door opening sensor
	ON/OFF button
	Performance mode
	Quiet mode
	Turbo mode
	Error warning
	Temperature indicator
	Temperature selection button
	Compressor and error indicator

No./Symbol	Description
	Operation mode button

9.3 Operation mode

The operation mode indicator LEDs display the following setting options:

Operation mode		Symbol	Compressor speed	Outer fan	Temperature setting	Duration
Performance mode			Auto	High	Levels 1 – 5	–
Quiet mode	RCD10.5XES		Auto	Off	Levels 1 – 3	Max. 8 h
	RCD10.5XEG, RCD10.5XEP		Limited	Low		
Turbo mode			High	High	Coldest level (5)	Max. 12 h

9.4 Compressor and error indicator (RCD10.5XEG, RCD10.5XEP only)

The compressor and error indicator displays the operating status of the compressor or indicates an error:

Color	Description
White	Compressor on
Light off	Compressor off
Orange (flashing)	Error (see Error indication on page 42)

10 Installation

10.1 Preparation

1. Ensure that the floor is solid and level.
2. Ensure that the refrigerator is level.
3. Install the refrigerator in a recess so that it stands secure when the vehicle is in motion.
4. Install the refrigerator and ensure that the refrigerator is easily accessible for service work and easy to de-install, install, and remove from the vehicle.

10.1.1 Dimensions of recess and refrigerator (external ventilation)

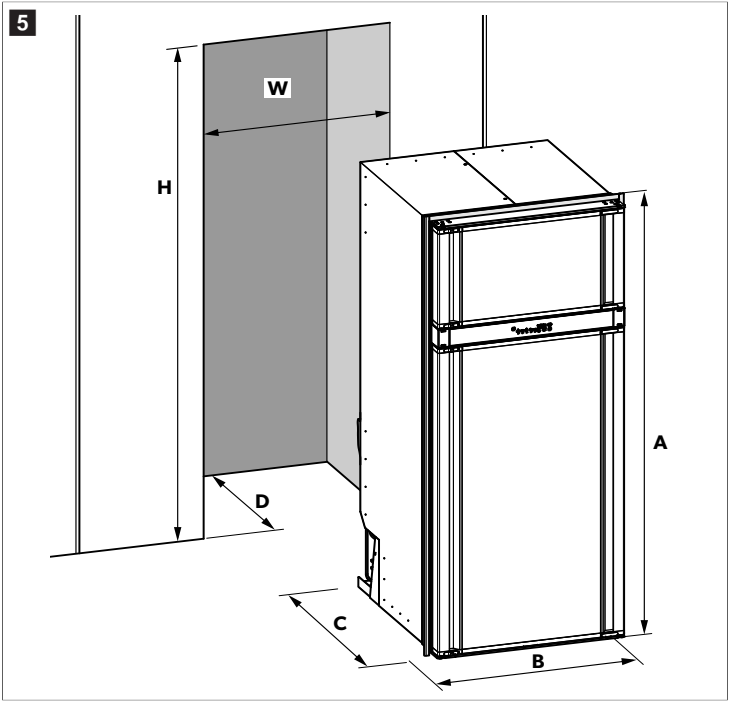

Refrigerator	Overall dimension	
	Regular mounting	**Flush mounting**
Height (**A**)	1260 mm	1246 mm
Width (**B**)	550 mm	523 mm
Depth (**C**)	615 mm	

Recess	Dimension	
	Regular mounting	**Flush mounting**
Height (**H**)	1251 … 1256 mm	
Width (**W**)	530 … 535 mm	

Recess	Dimension	
	Regular mounting	Flush mounting
Depth (**D**)	571 … 586 mm	625 … 640 mm

10.1.2 Dimensions of recess and refrigerator (internal ventilation)

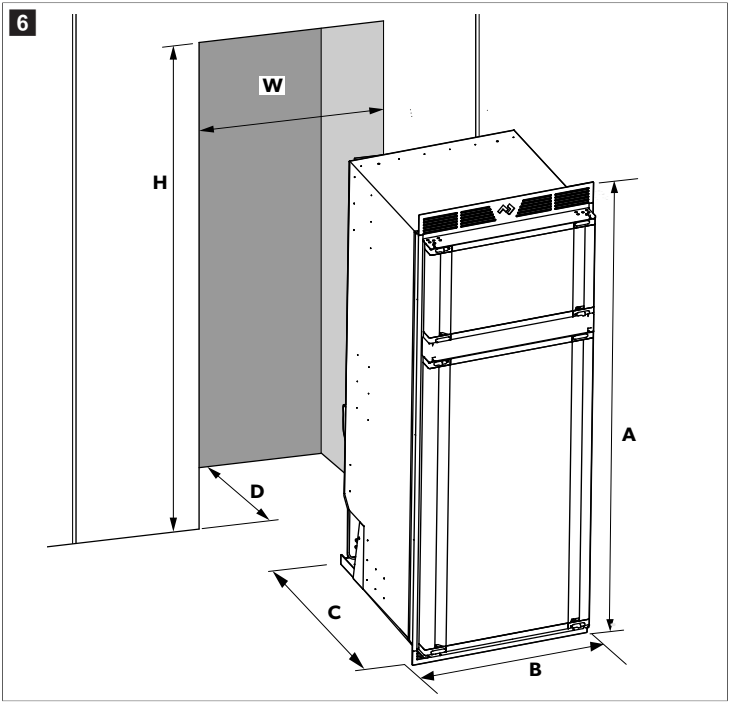

Refrigerator	Overall dimension	
	Regular mounting	Flush mounting
Height (**A**)	1362 mm	
Width (**B**)	550 mm	523 mm
Depth (**C**)	615 mm	

Recess	Dimension	
	Regular mounting	Flush mounting
Height (**H**)	1343 … 1348 mm	
Width (**W**)	530 … 535 mm	
Depth (**D**)	571 … 586 mm	625 … 640 mm

10.1.3 Dimensions of recess and refrigerator (roof ventilation)

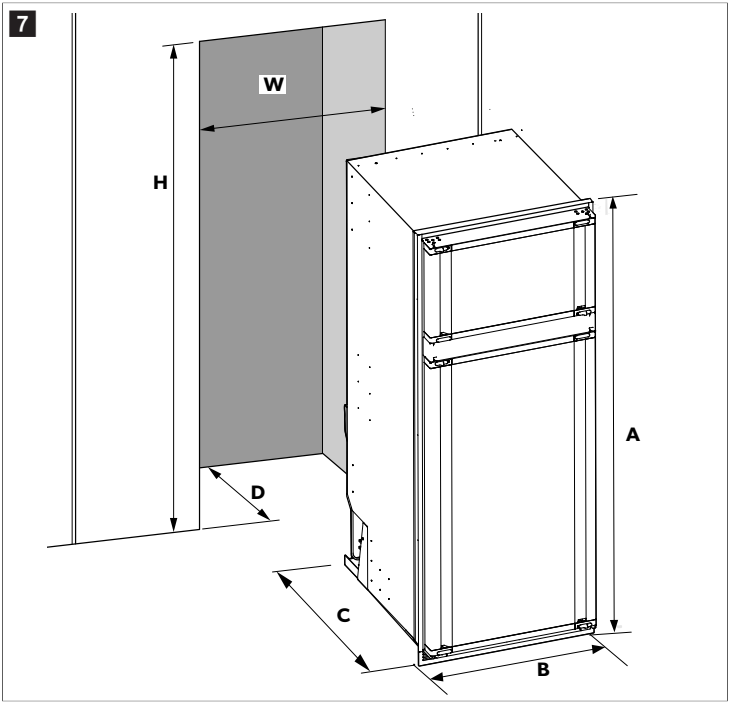

Refrigerator	Overall dimension	
	Regular mounting	Flush mounting
Height (**A**)	1301 mm	1286 mm
Width (**B**)	550 mm	

Refrigerator	Overall dimension	
	Regular mounting	Flush mounting
Depth (**C**)	615 mm	

Recess	Dimension	
	Regular mounting	Flush mounting
Height (**H**)	1280 … 1285 mm	
Width (**W**)	530 … 535 mm	
Depth (**D**)	571 mm … 586 mm	625 … 640 mm

10.2 Installation with external ventilation

10.2.1 Installation with two rear vents

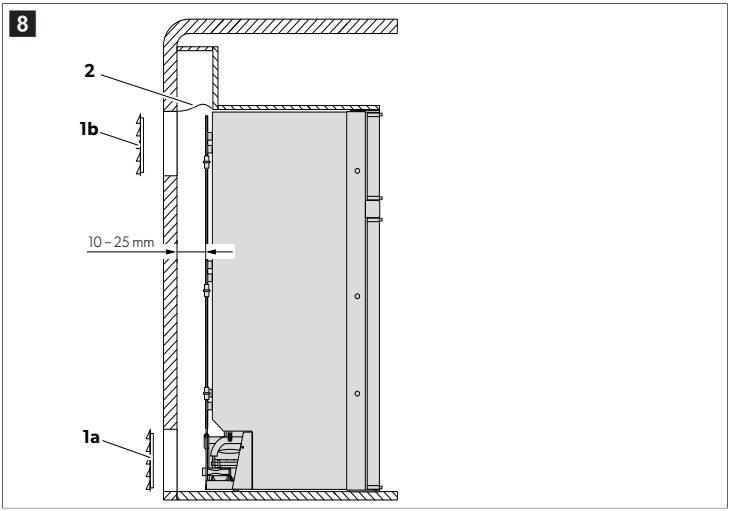

No. in Fig. 8 on page 17	Description
1a	LS300 ventilation grille
1b	
2	Air deflection plate

1. Keep the air inlet and outlet vents free from being covered by vehicle parts (such as an open door or by installed accessories such as bicycle racks) while operating.

2. Install the refrigerator and ensure that it is protected from excessive heat, otherwise it leads to poor performance and high power consumption of the refrigerator.
3. Perform the electrical installation in compliance with national and local regulations.
4. Fit the outer wall with one air inlet ventilation grille (**1a** in **Fig. 8** on page 17) and one outlet ventilation grille (**1b** in **Fig. 8** on page 17) so that the heat generated can be easily released to the outside.
   a) Install the lower air inlet vent LS300 flush to the vehicle floor.
   b) Install the upper air outlet vent LS300 with the top of the vent no lower than the top of the refrigerator. Higher than the refrigerator is allowed.
5. Fit an air deflection plate (**2** in **Fig. 8** on page 17) above the top vent so that the heat does not accumulate above the refrigerator.

10.2.2 Installation with one lower rear vent and one roof vent

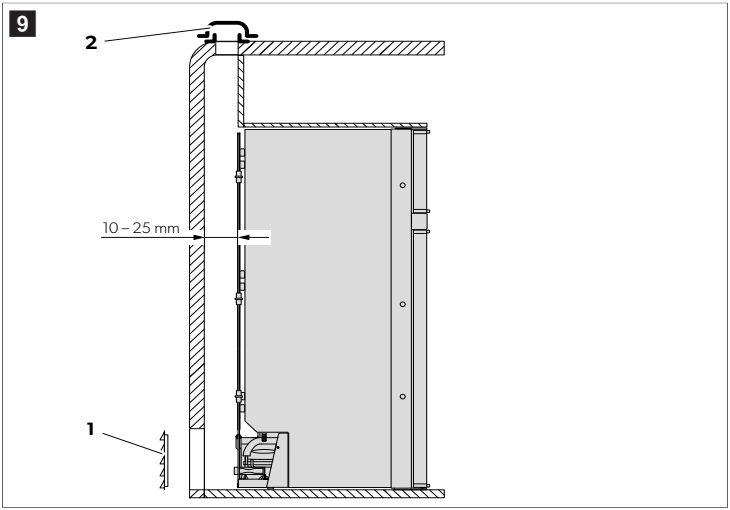

No. in Fig. 9 on page 18	Description
1	LS300 ventilation grille
2	Roof vent

1. Install the LS300 ventilation grille (**1** in **Fig. 9** on page 18) to the vehicle floor.
2. Install a roof vent (**2** in **Fig. 9** on page 18) instead of a rear upper air outlet vent.
   a) Install the roof vent directly above the back of the refrigerator as far as this is possible.
   b) If needed, use an air duct to install the roof vent offset, otherwise heat will accumulate there.

10.3 Installation with internal ventilation

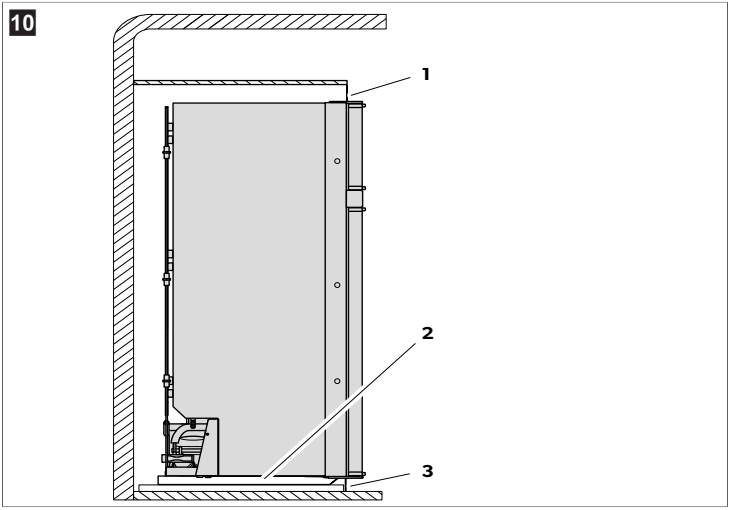

No. in Fig. 10 on page 19	Description
1	Top grille (accessories)
2	Guide rails (accessories)
3	Bottom grille (accessories)

1. Mount the guide rails onto the floor in the installation recess (see Mounting the guide rails on page 24).
2. Install the refrigerator and ensure that it is protected from excessive heat, otherwise it leads to poor performance and high power consumption of the refrigerator.
3. Mount the bottom grille using the sealing strip (see Mounting the bottom grille on page 25).
4. Mount the top grille onto the top of the refrigerator (see Mounting the top grille on page 23).

10.4 Installation with roof ventilation

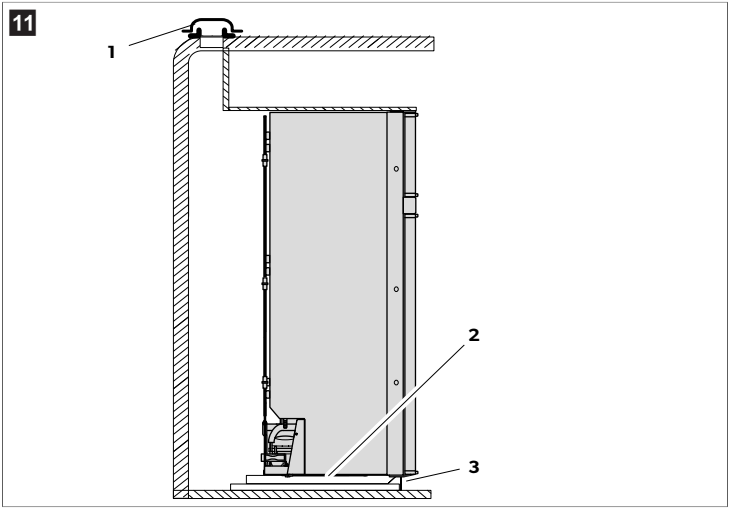

No. in Fig. 11 on page 20	Description
1	Roof vent (accessories)
2	Guide rails (accessories)
3	Bottom grille (accessories)

1. Mount the guide rails to the floor (see Mounting the guide rails on page 24).
2. Install the refrigerator and ensure that it is protected from excessive heat, otherwise it leads to poor performance and high power consumption of the refrigerator.
3. Mount the bottom grille (see Mounting the bottom grille on page 25).
4. Install a roof vent. (see Installing the roof vent on page 22)

10.5 Installation in a sealed location separate to the living space

Installing the refrigerator in a sealed location is recommended, which prevents dust and heat from entering the living space of the caravan or motor home.

WARNING! Fire hazard

> Do not use flammable materials such as silicone sealants, foam or something similar for the draft-proof installation.

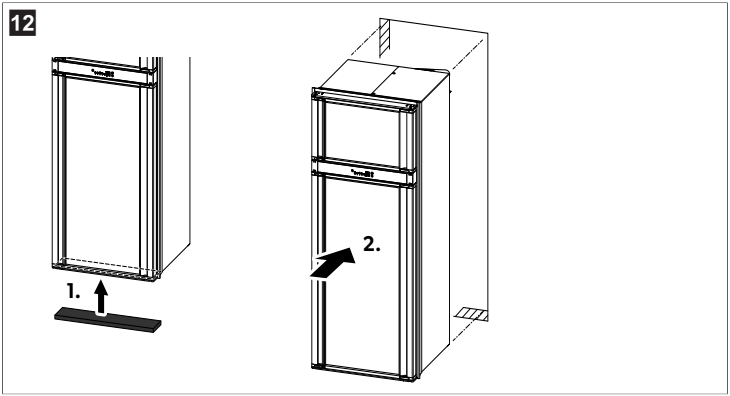

1. Apply the included sealing strip to the front of the bottom surface of the refrigerator (**1.** in **Fig. 12** on page 21).
2. Push the refrigerator into position (**2.** in **Fig. 12** on page 21). This then seals the space behind the refrigerator to the interior of the vehicle.

10.6 Installing the roof vent

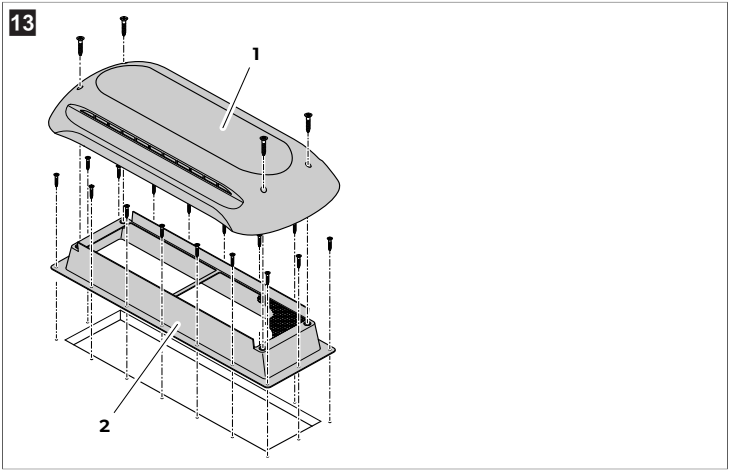

No. in Fig. 13 on page 22	Description
1	Hood
2	Installation frame

1. Cut out a section in the roof. Refer to the roof vent instruction manual for the required dimensions. When doing so, observe the information (see Preparation on page 13).
2. Ensure the installation frame is water-resistant.

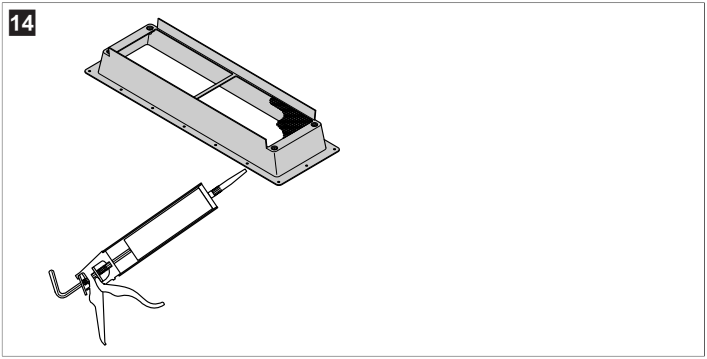

3. Insert the installation frame and screw it down tightly (**1.** in **Fig. 15** on page 23). Use all the fixing holes for this.
4. Insert the hood and screw it down tightly (**2.** in **Fig. 15** on page 23).

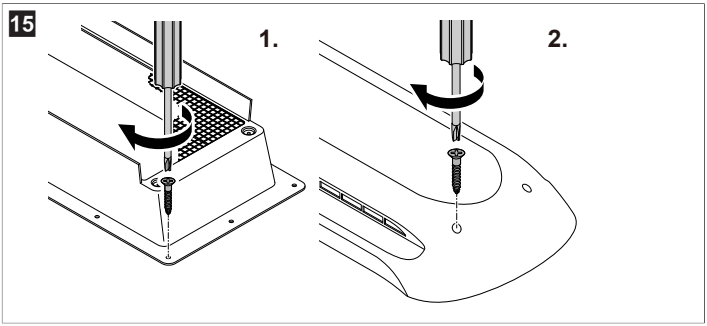

10.7 Mounting the top grille

NOTE Use the internal ventilation kit (accessories).

1. Remove the top flange before mounting the grille.

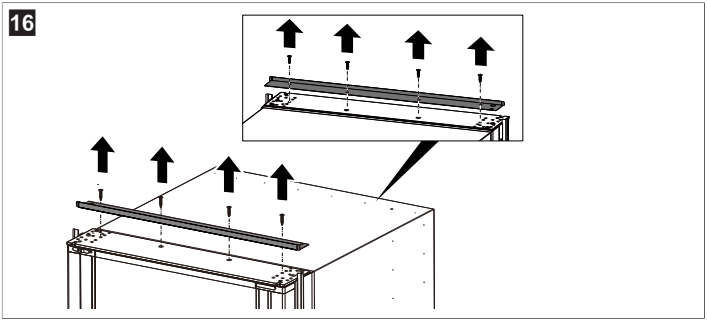

2. Mount the top grille to the refrigerator and use four screws to fix the grille.

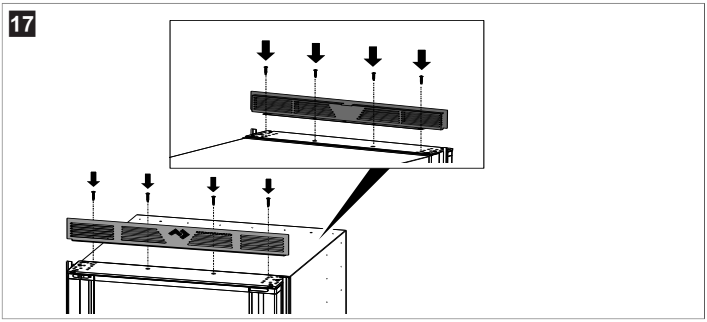

10.8 Mounting the guide rails

NOTE Use the internal ventilation kit (accessories).

> Mount the guide rails to the floor.

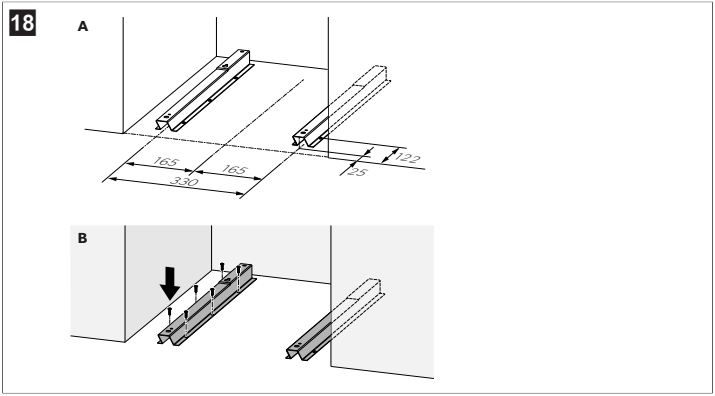

10.9 Mounting the bottom grille

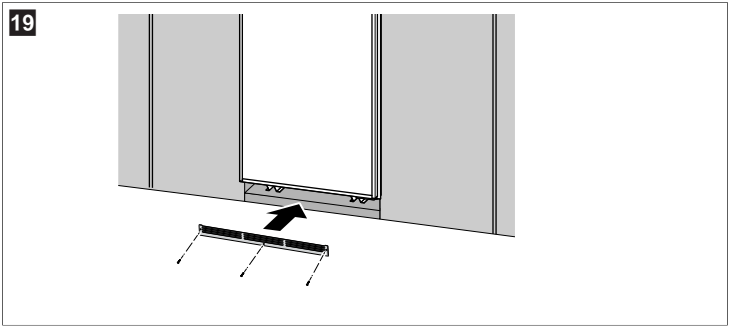

Push the bottom grille onto the edge of the ground plate, and secure the grille with screws.

10.10 Installing the drain water hose

1. To avoid damage to the drain water hose, position the hole for the drain water hose in a way that the hose does not kink.
2. Drill a hole through the vehicle floor at the rear of the refrigerator.
3. Install the drain water hose through the drilled hole. Ensure that the drain water hose is long enough in order to drain the water outside of the vehicle.

NOTE DO NOT shorten the drain hose. The excess length will enable partial extraction of the refrigerator if required for service access.

4. Ensure that the drain water hose is not kinked.
5. Seal the area around the drain water hose.

10.11 Installing the ventilation grille

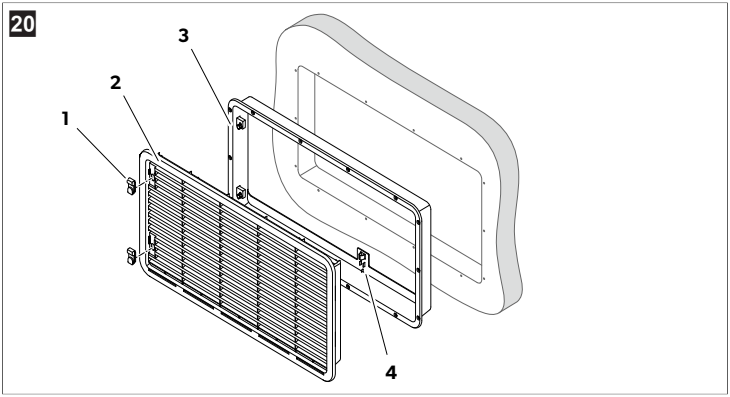

No. in Fig. 20 on page 26	Description
1	Slider
2	Ventilation grille
3	Installation frame

1. Make a cutout in the wall to fit an appropriate upper and lower vent system, choose LS300, and check the dimensions required for the vent. (See Preparation on page 13.)
2. Ensure the installation frame is water-resistant.

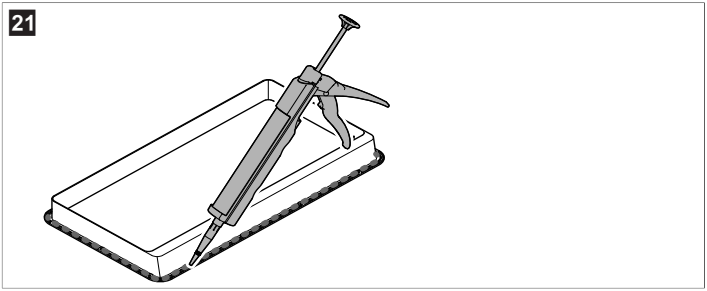

3. Insert the installation frame and screw it down tightly. Use all the fixing holes for this.

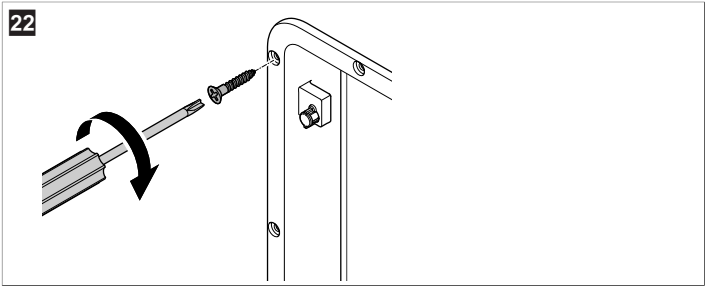

4. Fit the ventilation grille (**1.** and **2.** in **Fig.** 23 on page 27).
5. Insert the slider and lock the ventilation grille with it (**3.** in **Fig.** 23 on page 27).

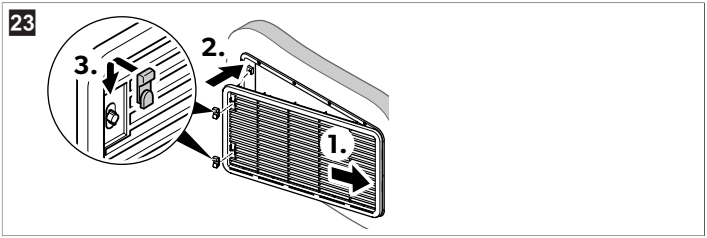

10.12 Securing the refrigerator

WARNING! Electrocution hazard

> Only screw through the bushes built into the refrigerator side walls (**Fig. 24** on page 28), otherwise foamed components, including electrical wiring, can be damaged.

NOTE

Ensure that the screws are tight, even when under increased loads (while driving).

1. Push the refrigerator firmly into its final location with the front flange sitting hard against the recess front.
2. Push suitable screws (not included, **1** in **Fig. 24** on page 28) through the bushes in the sides of the refrigerator, and fasten into the recess walls.
3. Fit the included bush caps (**2** in **Fig. 24** on page 28) into the bushes.

24

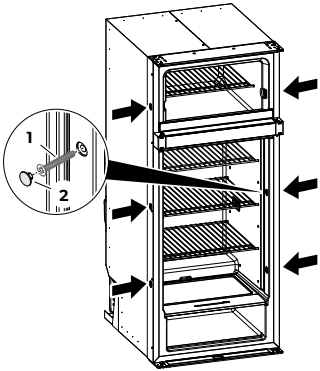

10.13 Connecting the refrigerator

10.13.1 Connecting the refrigerator to 12 V DC – 24 V DC

NOTICE! Damage hazard

> To avoid voltage drops and loss of performance, keep the connection cable as short as possible and uninterrupted, and therefore avoid additional switches, plugs, or power strips.

The refrigerator can be operated with a 12 V⎓ / 24 V⎓ voltage supply.

For safety reasons, the refrigerator has an electronic system to prevent reversed polarity. This protects the refrigerator against reversed polarity when connecting to a battery and against short circuiting.

To protect the battery, the refrigerator switches off automatically when the voltage is insufficient (see table below).

Table 1: Battery Voltage Thresholds

	12 V		24 V	
	Default	**Optional (RCD10.5XEG, RCD10.5XEP only)**	**Default**	**Optional (RCD10.5XEG, RCD10.5XEP only)**
End-of-discharge voltage	10.4 V	9.7 V	22.8 V	21.5 V
Cut-in voltage	11.7 V	11 V	24.2 V	22.9 V

1. Determine the required cross section of the cable in relation to the cable length according to the following table:

NOTICE! Damage hazard

> Ensure the polarity is correct.

Size		Max. Length	Max. Length
AWG	**Cross section**	**(12 V⎓)**	**(24 V⎓)**
13	2.5 mm^2	2.5 m	5 m
12	4 mm^2	4 m	8 m
10	6 mm^2	6 m	12 m
8	10 mm^2	10 m	20 m

2. Before starting up the refrigerator for the first time, check whether the operating voltage and the battery voltage match (see rating label).
3. Connect the cable to the refrigerator DC terminal block (**1** in **Fig. 25** on page 29).

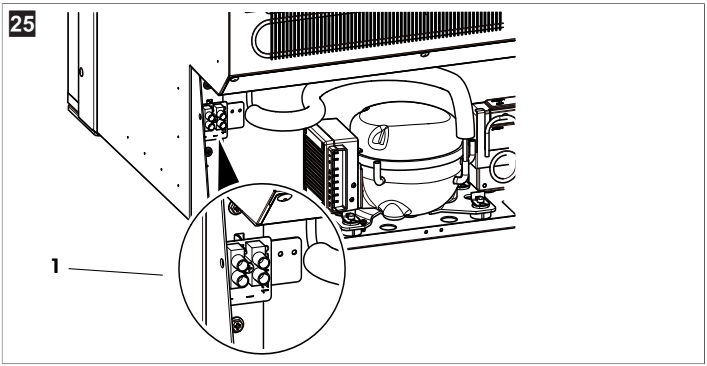

NOTE Connect the refrigerator as directly as possible to the battery to reduce the voltage drop in the cable.

4. Connect the refrigerator with fuse protection fitted to the positive (+) side of the supply cable of 15 A (at 12 V) or 7.5 A (at 24 V), with fuse fitted at the battery end of the cable.

10.13.2 Connecting the refrigerator to AC mains

DANGER! Electrocution hazard

> Never handle plugs and switches with wet hands or if you are standing on a wet surface.
> If the refrigerator is operated on a boat with an AC mains connection via a shore connection, a residual current circuit breaker must be installed between the AC mains and the refrigerator.
> Seek advice from a qualified electrician.

> To connect the refrigerator to the AC mains, plug the connector into the AC socket.

11 Operation

11.1 Saving energy

- Only open the refrigerator as often and for as long as necessary.
- Allow warm food to cool down first before placing it in the device to keep cool.
- Defrost your refrigerator as soon as a layer of ice forms.
- Avoid unnecessarily low temperature settings.
- For optimal energy consumption, position the shelves and drawers according to their position on delivery.
- On a regular basis, ensure the door seal still fits properly.
- Clean dust and dirt from the condenser at regular intervals.

11.2 Notes on storing food

NOTICE! Damage hazard

> Only store heavy objects such as bottles or cans in the refrigerator door, the vegetable compartment or on the bottom shelf.

26

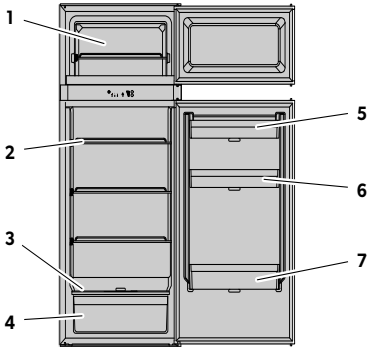

No. in Fig. 26 on page 31	Food
1	Frozen food
2	Dairy products, ready-made meals
3	Meat, fish, items for defrosting
4	Salad, vegetables, fruit
5	Eggs, butter
6	Dressing, ketchup, jam
7	Drinks in bottles or cartons

Note the following instructions for storing items:

- Do not keep carbonated drinks in the freezer compartment.
- The freezer compartment is suitable for making ice cubes and for keeping frozen food for a short term. It is not suitable for long-term food storage.
- Pack raw and cooked items separately.
- Note the expiry date on the packaging.
- Do not leave refrigerated items outside the refrigerator for too long.
- Clean the inside of the refrigerator regularly.

11.3 Operating the refrigerator

NOTE

- The refrigerator may give out mild odor when used for the first time. Keep the living space airy, and the odor will disappear in a few hours.
- Park the vehicle so that it is level, especially when starting up and filling the refrigerator before setting off on a journey.
- If you do not use the refrigerator for an extended period of time, disconnect the power supply.

> To switch on the refrigerator, press the ⏻ button for at least 3 s.
✓ The refrigerator starts with the last selected settings.
> To switch off the refrigerator, press the ⏻ button for at least 3 s.
✓ The refrigerator is switched off completely.

11.4 Using the refrigerator door/freezer compartment door

11.4.1 Opening the refrigerator door/freezer compartment door

CAUTION! Injury hazard

> Always close and lock the refrigerator before starting a journey.
> Open the doors carefully, because goods may have shifted and could fall out.

RCD10.5XES, RCD10.5XEG

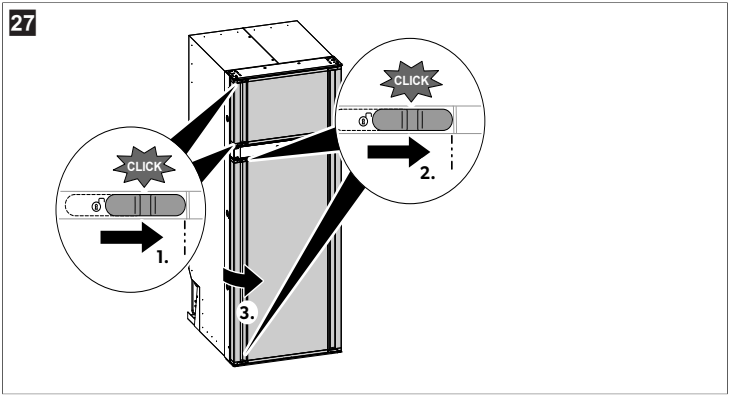

> Push the door locks to the right (**1.** and **2.**).
✓ The doors are now unlocked and can be opened.

RCD10.5XEP

> Press the handle and pull the door open.

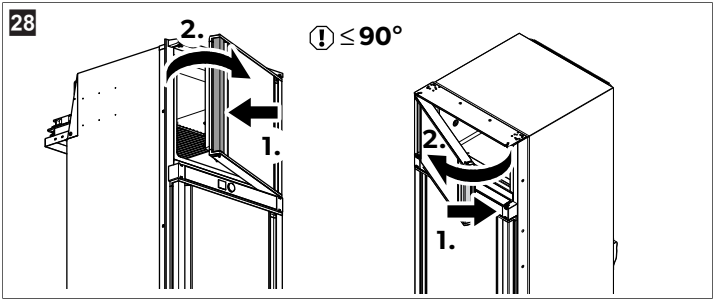

11.4.2 Locking the refrigerator door/freezer compartment door RCD10.5XES, RCD10.5XEG

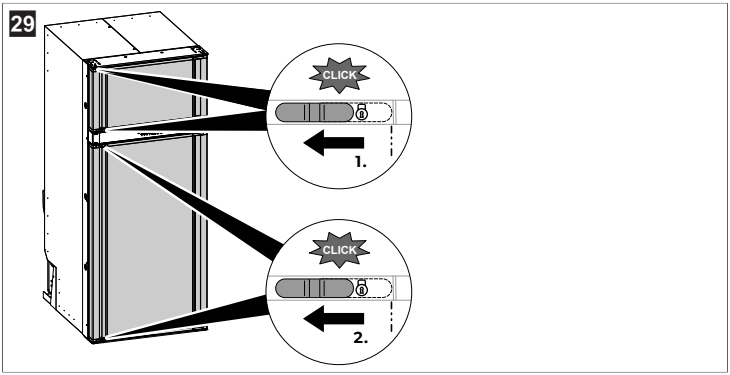

1. Ensure the airing catch is in the normal use position and not in the airing function position (**Fig. 38** on page 40).
2. Close the doors.
3. Push the door locks to the left (**1.** and **2.**).

✓ The door is now closed and locked for traveling.

RCD10.5XEP

1. Ensure the door is **not** in the winter position (see Positioning the refrigerator door/freezer compartment door into winter position on page 34).
2. Press the door shut until it clearly audibly clicks into place.

✓ The door is now closed and secured.

11.4.3 Positioning the refrigerator door/freezer compartment door into winter position

CAUTION! Risk of injury

> The winter position may **not** be used while driving.

Put the refrigerator door and the freezer compartment door into the winter position if the refrigerator will not be used for an extended period of time. This prevents mold.

1. Defrost the refrigerator (see Defrosting the refrigerator manually on page 40).
2. Turn the hook near the securing mechanism all the way at the top and bottom of one side of the door (**1.** in **Fig. 30** on page 34).

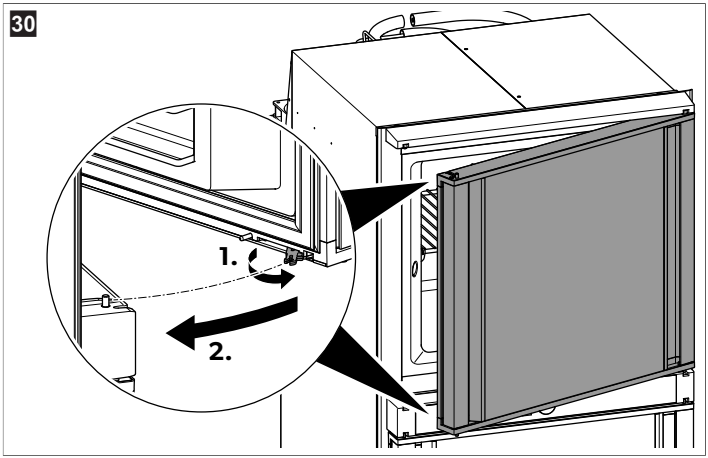

3. Press against the refrigerator door(**2.** in **Fig. 30** on page 34)

✓ The protruding pin snaps into the hook. The door is locked in position.

11.5 Positioning the shelves

WARNING! Risk of child entrapment

> All shelves are fixed in place to prevent children from climbing into the refrigerator.
- Only remove the shelves for cleaning purposes.
- Refit the shelves and secure them in place.

Removing the shelves (RCD10.5XES)

Before first use, clean the inside of the refrigerator with a damp cloth for hygienic reasons (see Cleaning and maintenance on page 40).

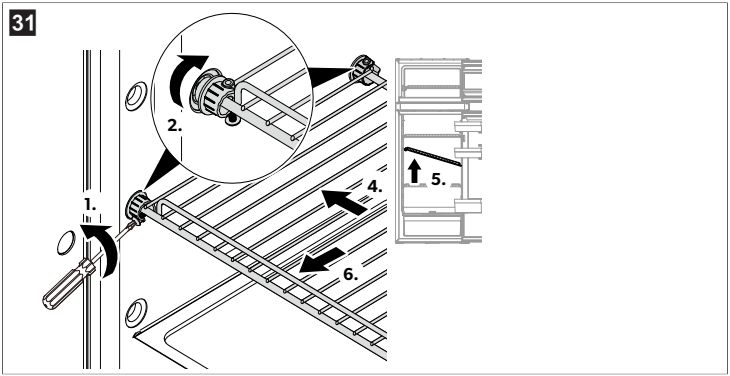

1. Loosen the screw (**1.**).
2. Turn the front ring clockwise (**2.**).
3. Turn the back ring anti-clockwise (**3.**).
4. Push the shelf to the right (**4.**).
5. Push the shelf up (**5.**).
6. Remove the shelf by pulling it out (**6.**).

Removing the shelves (RCD10.5XEG, RCD10.5XEP)

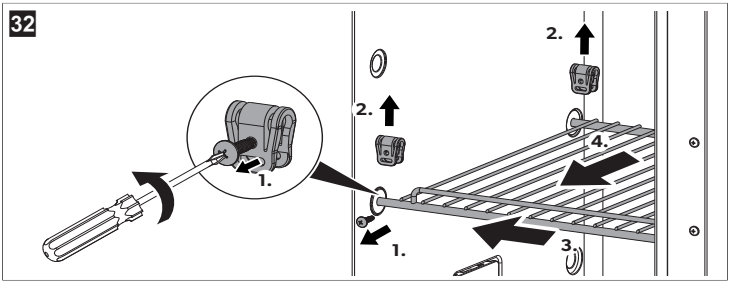

1. Loosen the screw (**1.**).
2. Remove the rings (**2.**).
3. Push the shelf to the right (**3.**).
4. Remove the shelf by pulling it out (**4.**).

Refitting the shelves

> Refit the shelf in the reverse order.

11.6 Replacing the door panel

Removing the door panel

1. Push the door locks to the right (**1.**).
2. Remove the door lock plates (**2.**).
3. Push the hinge side locks to the left (**3.**).
4. Tilt the door (**4.**).
5. Remove the door (**5.**).
6. Remove the upper plates (**6.** and **7.**).
7. Remove the door panel.

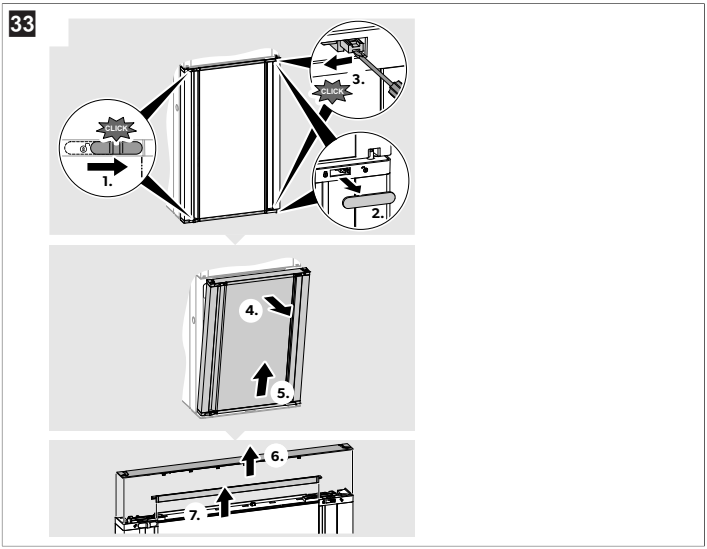

Installing the new door panel

1. Push the new panel downwards into the door until the lower horizontal edge of the panel fits into the bottom groove. Ensure that the vertical edges fit into the grooves of the door frame (**1.**).
2. Fit the upper plates onto the door (**2.** and **3.**).
3. Put the door back into place (**4.** and **5.**).
4. Push the hinge side locks to the right (**6.**).

5. Fit the door lock plates onto the door lock (**7.**).
6. Push the door locks to the left (**8.**).

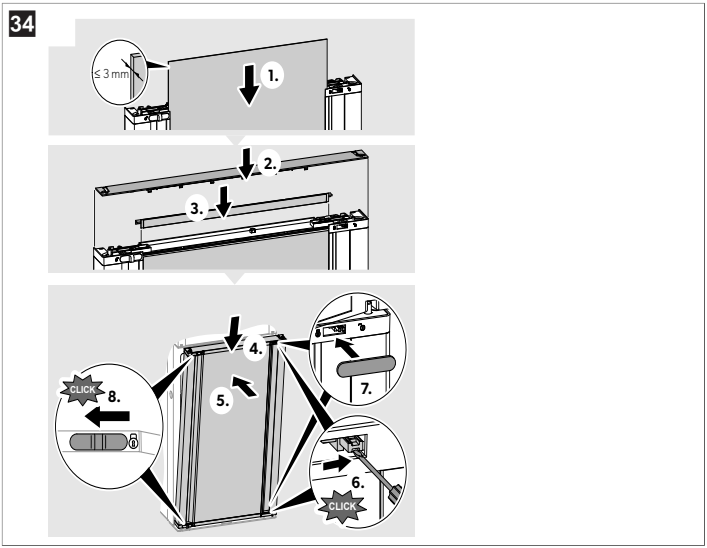

11.7 Replacing the door panel (RCD10.5XEP only)

Removing the door panel

1. Pull out the decorative strips on the sides of the door and remove the door panel.

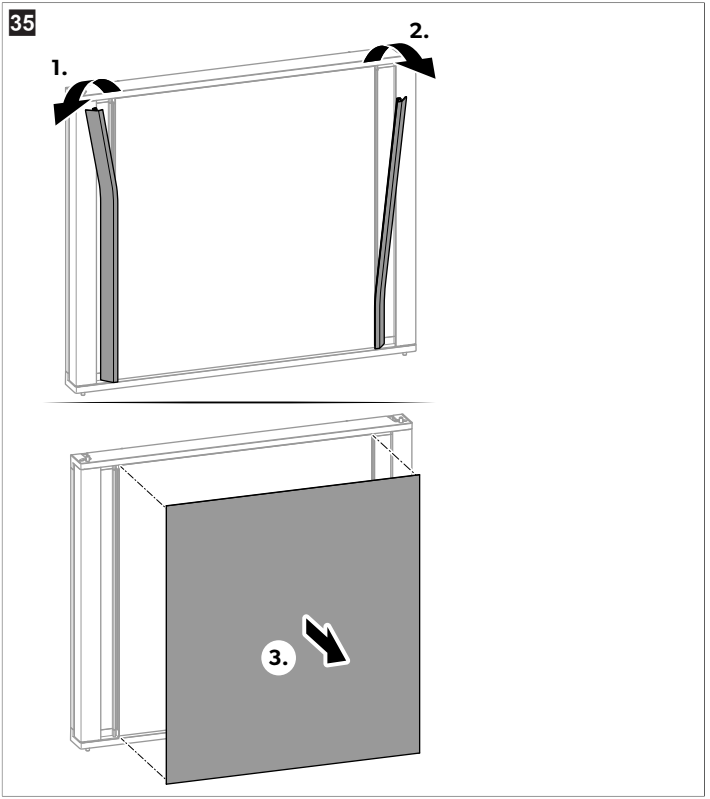

Installing the new door panel – thickness: 1 – 2.7 mm(± 0.1 mm)

2. Place the new door panel on the door.

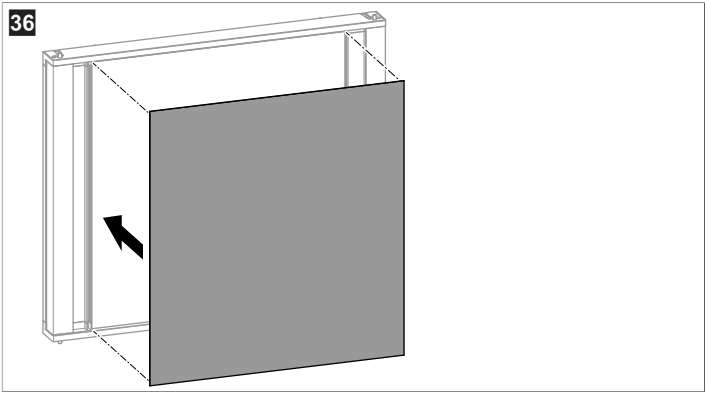

3. Secure the door panel by attaching the decorative strips to the sides of the door.

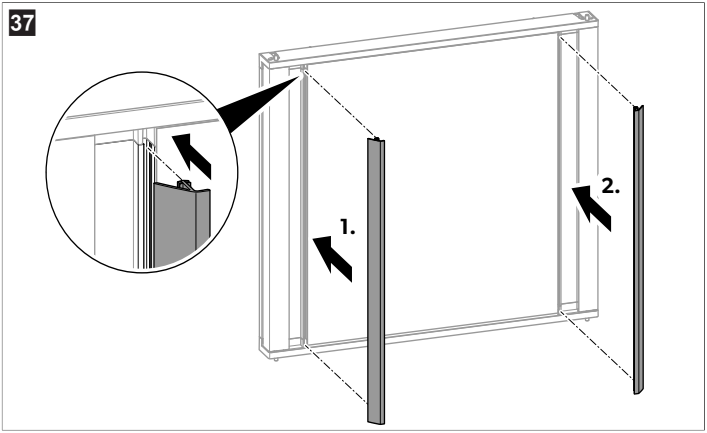

11.8 Preparing the refrigerator for prolonged periods of non-use

NOTICE! Damage hazard

> Do not use the door airing function while driving.

Use the door ventilation function of the refrigerator door and the freezer compartment door when the refrigerator is not used for a prolonged period of time. This prevents mold from forming when the refrigerator is not in use or put into storage.

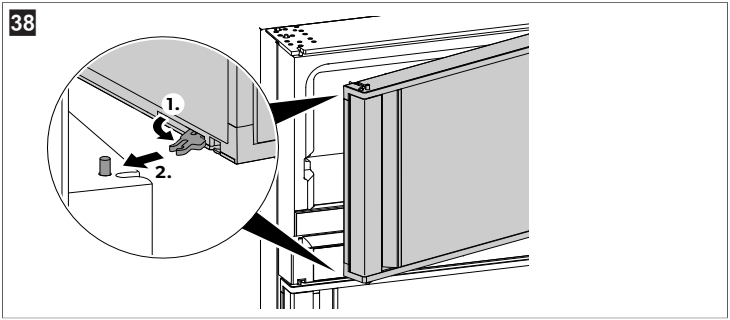

1. Defrost the refrigerator (see Defrosting the refrigerator manually on page 40).
2. Rotate the airing catch located at the rear of door by 180 ° (**1.** in **Fig. 38** on page 40).
3. Engage the airing catch (**2.** in **Fig. 38** on page 40).

✓ The doors are latched slightly opened.

12 Cleaning and maintenance

WARNING! Electrocution hazard

> Always disconnect the refrigerator from the main power supply before you clean and service it.

NOTICE! Damage hazard

> Do **NOT** use abrasive cleaning agents, hard objects, or any chemical agents such as HC Cleaner or EtOH to clean the fridge.
> Never use hard or sharp tools to remove ice or to free objects frozen onto the device.
> Do not use any mechanical tools or any other tools to speed up the defrosting process.

> Clean the refrigerator regularly and as soon as it becomes dirty with a damp cloth.
> Ensure that no water drips into the seals. This can damage the electronics.
> Wipe the refrigerator dry with a cloth after cleaning.
> Check the condensate drain regularly.

Clean the condensate drain when necessary. If it is blocked, the condensate collects on the bottom of the refrigerator.

12.1 Defrosting the refrigerator manually

The refrigerator compartment has an automatic cyclic defrost system, which prevents excessive frost. However, if the refrigerator is used for extended periods in high humidity and/or high ambient temperature conditions, frost may build up on the rear interior wall, which will reduce the cooling performance. In this case, a manual defrosting is recommended.

Over time, frost builds up on the back wall inside the refrigerator. If this layer of frost is about 3 mm thick, defrost the refrigerator.

NOTICE! Damage hazard

> Do not use any mechanical tools or any other tools to speed up the defrosting process.

1. Disconnect the power supply.
2. Empty the contents.
3. Put a cloth in the refrigerator compartment to absorb any excess water.
4. Leave the doors open.
   - Most of the refrigerator compartment condensate drains off through a hose at the back of the refrigerator and is routed outside the vehicle.
   - If the hose is blocked, the refrigerator compartment condensate will collect at the bottom of the refrigerator.
5. Wipe both compartments dry with a cloth.

13 Troubleshooting

Problem	Possible cause	Suggested remedy
The refrigerator does not work.	(**RCD10.5XES** only) The fuse on the main board is defective.	The fuse on the main board must be replaced. Contact an authorized service agent.
	The vehicle fuse has blown.	Replace the vehicle fuse. (Please refer to the operating manual of your vehicle.)
	The vehicle battery is discharged.	Test the battery and charge it.
	The temperature at the compressor is too low (≤ 0°C).	Close/cover all external ventilation grilles completely with insulation material.
	The refrigerator switches off automatically if the voltage is insufficient (end-of-discharge voltage: 10.4 V [12 V⎓ battery] / 22.8 V [24 V⎓ battery])	Load the battery. The refrigerator will start again automatically (cut-in voltage: 11.7 V [12 V⎓ battery] / 24.2 V [24 V⎓ battery])
The refrigerator is not cooling adequately.	The ventilation around the cooling unit is not sufficient.	Check that the ventilation grille is not obstructed.
	The evaporator is iced up.	Check whether the refrigerator door closes properly. Make sure that the refrigerator seal fits correctly and is not damaged. Defrost the refrigerator.
	The temperature is set too high.	Set a lower temperature.

Problem	Possible cause	Suggested remedy
	The ambient temperature is too high.	Remove the ventilation grille for a while so that warm air can escape again.
	The refrigerator has not been operating for very long.	Check the temperature again after 4 h / 5 h.

Problem	Possible cause	Suggested remedy
The refrigerator does not work.	The vehicle fuse has blown.	Replace the vehicle fuse. (Please refer to the operating manual of your vehicle.)
	The vehicle battery is discharged.	Test the battery and charge it.
	The temperature at the compressor is too low (≤ 0°C).	Close/cover all external ventilation grilles completely with insulation material.
	The refrigerator switches off automatically if the voltage is insufficient (end-of-discharge voltage: 10.4 V [12 V⎓ battery] / 22.8 V [24 V⎓ battery])	Load the battery. The refrigerator will start again automatically (cut-in voltage: 11.7 V [12 V⎓ battery] / 24.2 V [24 V⎓ battery])
The refrigerator is not cooling adequately.	The ventilation around the cooling unit is not sufficient.	Check that the ventilation grille is not obstructed.
	The evaporator is iced up.	Check whether the refrigerator door closes properly. Make sure that the refrigerator seal fits correctly and is not damaged. Defrost the refrigerator.
	The temperature is set too high.	Set a lower temperature.
	The ambient temperature is too high.	Remove the ventilation grille for a while so that warm air can escape again.
	The refrigerator has not been operating for very long.	Check the temperature again after 4 h / 5 h.

13.1 Error indication

Flashing frequency	Audio alarm	Fault	Possible solution
Continuous	Yes	Defective temperature sensor in the refrigerator compartment	Contact an authorized customer service point.
1	Yes	DC voltage < 11.7 V or < 24.2 V	Resets automatically.

Flashing frequency	Audio alarm	Fault	Possible solution
2	Yes	Outer fan overcurrent	Resets automatically.
3	Yes	Compressor does not start.	Resets automatically.
4	Yes	Compressor overload	Resets automatically.
5	Yes	Compressor controller unit is cut out due to overheating.	Resets automatically.
–	Yes	Door open for more than 2 min	Close the door.

14 Warranty

If the product does not work as it should, please contact your retailer or the manufacturer's branch in your country (see dometic.com/dealer). The warranty applicable to your product is 3 year(s).

For repair and warranty processing, please include the following documents when you send in the device:

- A copy of the receipt with purchasing date
- A reason for the claim or description of the fault

Note that self-repair or nonprofessional repair can have safety consequences and might void the warranty.

Australia only

Our goods come with guarantees that cannot be excluded under the Australian Consumer Law. You are entitled to a replacement or refund for a major failure and for compensation for any other reasonably foreseeable loss or damage. You are also entitled to have the goods repaired or replaced if the goods fail to be of acceptable quality and the failure does not amount to a major failure. The benefits provided to you as the consumer by this warranty are in addition to other rights and remedies available to you under the law.

New Zealand only

This warranty policy is subject to the conditions and guarantees which are mandatory as implied by the Consumer Guarantees Act 1993(NZ).

Local support

Please find local support at the following link address: dometic.com/dealer

15 Disposal

WARNING! Risk of child entrapment

> Before disposing of your old product:
  - Dismantle the lid.
  - Leave the baskets in place so that children may not easily climb inside.

Place the packaging material in the appropriate recycling waste bins wherever possible. This separation is necessary, as packaging is valuable resource and improper disposal may impact human health and the environment.

Consult a local recycling center or specialist dealer for details about how to dispose of the product in accordance with the applicable disposal regulations.

The product can be disposed free of charge.

16 Technical data

	RCD10.5XES	RCD10.5XEG, RCD10.5XEP
Total volume	200 L	
Refrigerator compartment volume	159 L	
Freezer compartment volume	41 L	40.6 L
Connection voltage	100 V~ … 240 V~, 50 Hz … 60 Hz 12 V⎓ or 24 V⎓	
Rated current	9.5 A at 12 V⎓ 4.6 A at 24 V⎓ 1.3 A at 100 V~ 0.5 A at 240 V~	7.2 A at 12 V⎓ 3.6 A at 24 V⎓ 0.9 A at 100 V~ 0.48 A at 240 V~
Cooling temperature range:		
• Refrigerator compartment	0°C … 8°C	
• Freezer compartment	– 20°C … – 10°C	
Noise emission	39 dB(A)	
Climatic class	N or T (16°C … 43°C)	
Short-term inclination	30 °	
Refrigerant	R600a	
Refrigerant quantity	34 g	
Defrost:		
• Refrigerator compartment	Cyclic	
• Freezer compartment	Manual	
Dimensions (in mm) W*H:		
• Without flange	523 mm × 1246 mm	
• With flange	550 mm × 1260 mm	
Depth (in mm):		
• Overall	615 mm	
• From flange rear face	561 mm	
Weight	49.5 kg	
Inspection/Certification		

The cooling unit is hermetically sealed.

DOMETIC

4445103493 4472003469 54-695-MAW40A01 REV03 2026-10-15

dometic.com

YOUR LOCAL DEALER

dometic.com/dealer

YOUR LOCAL SUPPORT

dometic.com/contact

YOUR LOCAL SALES OFFICE

dometic.com/sales-offices

A complete list of Dometic companies, which comprise the Dometic Group, can be found in the public filings of:
DOMETIC GROUP AB • Hemvärnsgatan 15 • SE-17154 Solna • Sweden