DOMETIC

3 COOK TURBO FFD

MODEL No:303F

2.75kPa

DO NOT REMOVE

AUSTRALIA AND NEW ZEALAND
GAS SAFETY CERTIFICATION

GasMark
IAPMO
TM

USER INSTRUCTIONS

EN

NOTE! PRODUCT MAY VARY FROM ILLUSTRATIONS

503-0993 LEV3

Explanation of Symbols

Recycling packaging material. Place the packaging material in the appropriate recycling waste bins wherever possible.

CAUTION

Provide ample ventilation. This gas appliance consumes air (oxygen). Do not use this appliance in an unventilated space to avoid endangering your life. If still more gas appliances and/or occupants using gas are added to the space, additional ventilation must be provided.

IMPORTANT

Read these instructions carefully before use. Familiarise yourself with the appliance before fitting to a gas supply. Keep these instructions for future reference.

1. Safety information

These instructions are for your safety and to help you avoid risk of injury and/or damage. All warranties will become void if you do not follow these instructions.

- Read these instructions carefully before using the appliance.
- This appliance complies with AS/NZS 5263.0 and AS/NZS 5263.1.7.
- CAUTION: Gas appliances require ventilation for efficient performance and to ensure the safety of users and other persons in close proximity. The use of a gas cooking appliance results in the production of heat, moisture and products of combustion in the area in which it is used. Ensure that the environment is well ventilated especially when the appliance is in use.
- This appliance is not connected to a flue for removal of gas combustion waste products. Particular attention shall be given to the relevant requirements regarding ventilation.
- For additional safety, this appliance is fitted with a '**Flame Failure Device**' **(FFD)**, ensuring that the gas supply to the burner shuts off immediately should the flame inadvertently go out. In the event that this happens, be sure to turn off the gas supply by closing the gas cylinder valve.
- **NOTE:** The windshields must be in place when operating the appliance outdoors.
- Make sure that the gas supply from the gas cylinder is turned off after use.
- **CAUTION:** This appliance is for cooking purposes only. It shall not be used for other purposes.
- DO NOT spray aerosols in the vicinity of this appliance whilst it is in operation.
- DO NOT use or store flammable materials in or near this appliance.
- DO NOT modify this appliance, any modification may be dangerous.
- DO NOT use an adaptor at the cylinder connection.
- DO NOT place articles on or against this appliance.
- **WARNING:** ACCESSIBLE PARTS MAY BE VERY HOT. KEEP YOUNG CHILDREN AWAY.
- DO NOT use this appliance indoors.
- FOR OUTDOOR USE ONLY.

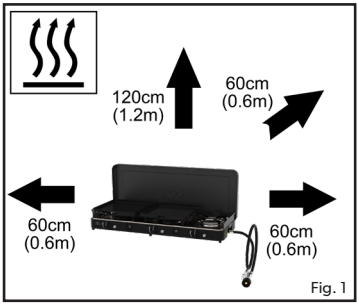

Fig. 1

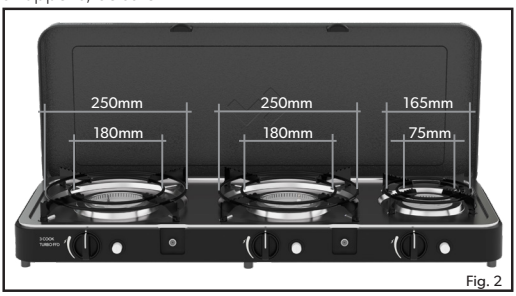

Fig. 2

Assembly and use

- Do not use the appliance if it has damaged or worn seals.
- Do not use an appliance that is leaking, damaged or which does not operate properly.
- Handle the appliance with care, do not drop it.
- Always operate the appliance on a firm level surface.
- Ensure that the gas inlet connection is not impeded in any way. Impediment at the connection site may lead to improper connection and may result in a gas leak.
- Ensure that the assembled product is stable and does not rock.
- This appliance must be kept away from flammable materials during use. Minimum safe distances are: Above the appliance 120cm. At the rear and sides 60cm (fig 1).
- When using a pot, the minimum recommended pot size is 180mm and maximum recommended size is 250mm. The minimum pot size when using the coffee pot stand is 60mm. (fig 2)
- **Attention**: When using the 2 Cook Dome (optional accessory) during cooking, in order to prevent the Dome handle from becoming very hot, limit use of the Dome to 8 minutes on a high heat setting, or 16 minutes on a low heat setting. **Always use oven gloves or mitts to protect your hands.**
- Do not use any cooking surface or pot that is larger than the recommended size. Our cooking surfaces have been specifically designed to allow gas combustion to escape and the closure of this space could affect the performance of this appliance.
- **WARNING**. Do not use a cooking vessels on the stove that overlaps its edges.
- Ensure that the device is clear of any spiderwebs, dirt or debris that would otherwise inhibit air flow, potentially leading to dangerous operating conditions.
- Sealed parts should not be altered by the user.
- Do not move the appliance during use.
- Never leave the appliance unattended when lit.
- Parts of the appliance will become hot (particularly the burner). Avoid touching hot parts with bare hands. The use of gloves is recommended.
- Ensure your pot stands/cooking surfaces are correctly placed when using your appliance.

Hose

- This appliance shall only be used with an Australian certified gas hose and regulator. A LCC27 Regulator with 1.2m hose and ¼" (female) RH threaded connection is supplied.
- The hose and regulator must be checked for wear or damage before every use and before connecting to the gas supply.
- Do not use a hose and regulator if it is shows any signs of damage, or if the hose is worn. Replace the hose.
- Do not twist or pinch the hose. Route the hose away from the body of the appliance so that it does not come into accidental contact with any heat sources.
- Contact an authorised dealer should your gas hose and regulator need replacing.

Hose exchange:

This gas appliance is factory-fitted with an LCC27 gas hose and regulator. This hose and regulator may be removed in order to fit a compatible LCC27 gas hose and regulator, or the CADAC Dometic Dual or Quad Power Pak gas supply options (sold seperately).

Note: To avoid damage to the harness, care must be exercised when removing the LCC27 Hose and regulator. The appliance heatshield may need to be removed if the harness is not accessible.

i) Using a suitable spanner, loosen the hose from the appliance. Ensure stability of the harness (so that the gas manifold does not rotate) by holding it in place with your free hand.

ii) Attach a compliant LCC27 gas hose and regulator or Power Pak option, ensuring that hose is aligned and fitted correctly. Use a suitable spanner (or handwheel if available) to tighten the connection, and **perform a leak test on all joints before using the appliance.**

i

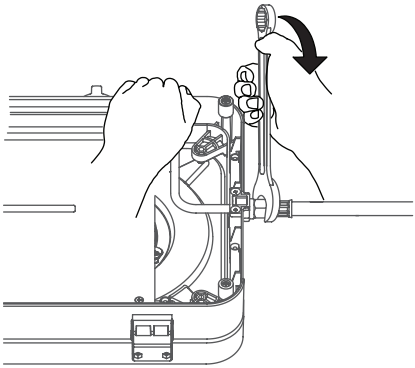

ii

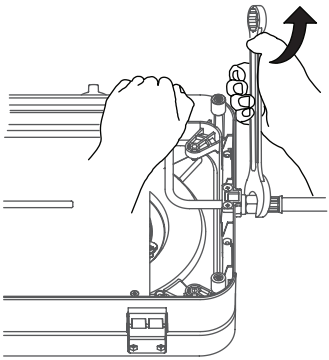

- **Note:** This appliance can be connected directly to a Caravan/RV via an approved RV bayonet hose with ¼" RH (Female) threaded connection (not included). See figure 3.
- WARNING: **Fitment and exchange of an RV gas hose to the appliance MUST BE DONE BY AN AUTHORISED PERSON, and a leak test must be conducted with each fitment or hose change.**

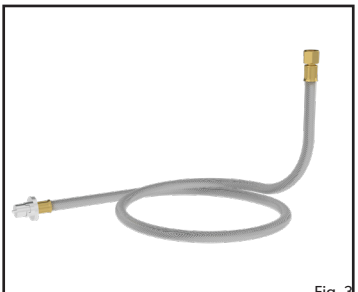
Fig. 3

Gas Container

- This appliance can be used with a Type 27 refillable 4.5-9kg ULPG cylinder certified to AS 2469.
  If using a Dual Power Pak, use only gas cartridges that are compliant with EN417 and DOT39 safety standards.
  If using a Quad Power Pak, use only compliant 220g gas cartridges.
- IT COULD BE HAZARDOUS TO ATTEMPT TO FIT OTHER TYPES OF GAS CARTRIDGES.
- Only to be used with a gas cylinder that does not exceed 500mm in height (not including the regulator) and 400mm in width.
- Ensure that the gas supply is fitted or changed in a well-ventilated location, preferably outdoors, away from any sources of ignition such as naked flames, pilots, electric fires and away from other people.
- Keep gas supply away from heat and flame. Do not place on a stove or any other hot surface.
- Refillable containers are to be used only in the upright position so as to ensure proper fuel withdrawal. Failure to adhere to this may cause liquid discharge from the gas container resulting in dangerous operating conditions.
- Do not try to remove the gas supply whilst the appliance is in operation.
- The gas supply must be disconnected from the gas hose and regulator after use or when in storage.
- **Caution**: Ensure that this appliance remains free of any obstruction that may cause fire during use.

Light back

- In the event of light back (where the flame burns back and ignites inside the burner or venturi housing), immediately turn off the gas supply by firstly closing the control valve on the gas cylinder and then the appliance valve. After the flame is extinguished, remove the regulator and check the condition of the seal; replace the seal if in doubt. Re-light the appliance.
- Should the flame persistently light back, return the product to your authorised repair agent.

Leaks

- For appliances for use with cylinders: If there is a gas leak on your appliance (smell of gas), immediately attempt to turn off the cylinder valve. Remove the appliance to a well-ventilated location away from any ignition source. Check for leaks using soapy water. Do not try to detect leaks using a flame.

How to check the appliance is connected to the gas supply in a sound fashion (Leak test)

- A gas leak test should never be conducted using an open flame. The correct way is to perform a gas leak test is as follows:
  1. Spray soapy water on to all connection points between the between the appliance and the gas supply. i.e. where the hose connects to the appliance, and where the hose and/or regulator attaches to the gas supply.
  2. Ensuring the control knob on the appliance is in the off-position "•". Slowly turn the gas on at the gas supply and allow the gas to flow. S**oap bubble formation at a connection point is an indication of the presence of a gas leak.**
  3. Should bubbling occur, immediately turn the gas off and disconnect the gas supply from the appliance.
  4. Confirm that all the connections are properly fitted and tightened where necessary. Re-run the gas leak test with soapy water after refitting the gas supply.
- NOTE: If a gas leak persists, return the product to your local dealer for inspection/repair.

- ONLY USE IN WELL VENTILATED AREAS.
- CARBON MONOXIDE HAZARD - USING THIS APPLIANCE IN AN ENCLOSED SPACE MAY CAUSE DEATH. DO NOT USE IN CARAVANS, TENTS, MARINE CRAFT, CARS, MOBILE HOMES OR SIMILAR LOCATIONS.
- This appliance shall only be used in an above ground open air situation with natural ventilation, without stagnant areas, where gas leakage and products of combustion are rapidly by wind and natural convection.
- Any enclosure in which the appliance is used shall comply with one of the following:
  - An enclosure with walls on all sides, but with no overhead cover.
  - Within a partial enclosure that includes an overhead cover and no more than two walls.
  - Within a partial enclosure that includes an overhead cover and more than two walls, the following shall apply:
    - At least 25% of the total wall area is completely open.
    - 30% or more in total of the remaining wall side, back and front wall areas is open and unrestricted.
    - In the case of balconies, 20% or more of the total wall area shall remain open and unrestricted.

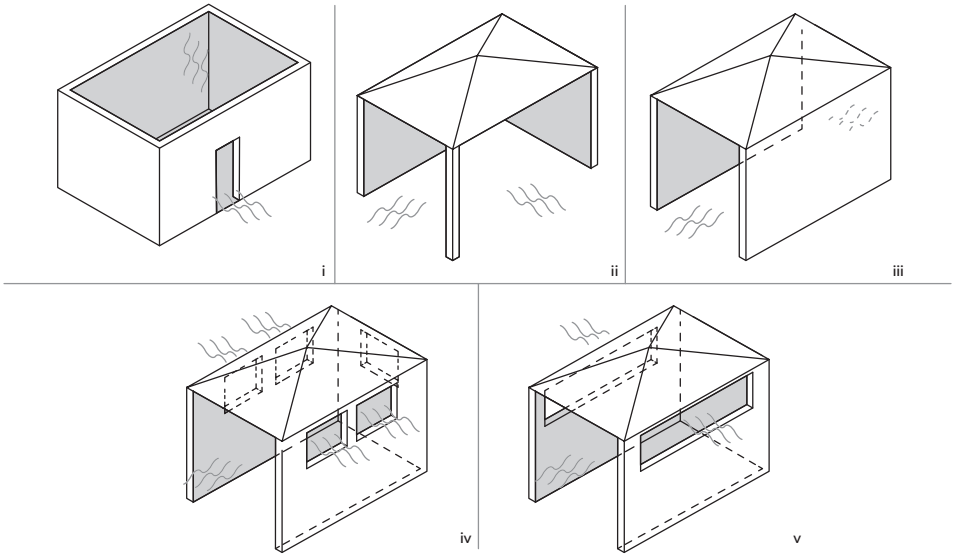

Country of use	AU & NZ
Appliance Categories	ULPG
Allowable gases and operating pressure	2.75kPa
Nominal usage (large burner)	Propane - 126 g/h per burner (126g/h x 2 = 252g/h in total)
Nominal usage (small burner)	Propane - 62g/h
Nominal usage (total)	314g/h
Gross nom. heat input (large burner)	6.5Mj/h per burner (6.5Mj/h x 2 = 13Mj/h in total)
Gross nom. heat input (small burner)	3.2 MJ/h
Gross nom. heat input (total)	16.2MJ/h
Injector number (large burner)	0.73
Injector number (small burner)	0.51
Gas supply sources (not supplied):	
A refillable gas container not exceeding 9kg and complying with local regulation in force.	
Compliant 220g butane gas cartridges, used alongside the Quad PowerPak (optional accessory).	
450g threaded cartidges compliant with EN417 and DOT39 safety standards with the Dual PowerPak (optional accessory).	

2. Fitting and Changing the Gas Supply

Connecting the gas supply

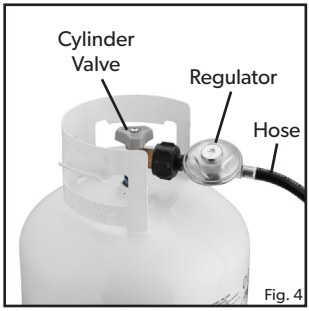

Fig. 4

- Check your gas hose and connections regularly for any signs of leaks and every time the gas cylinder is re-filled or fitted to the appliance, and with every use.
- Before connecting the hose and regulator to the gas supply, check that the appliance control knob is in the off-position "•".
- Before connecting the appliance to a gas supply, ensure that the regulator is in position and in good condition.
- Carry out these checks each time you fit the appliance to a gas cylinder.
- Blow out any dust from the gas supply opening to prevent possible blockage of the injector.
- Ensure that the gas supply is fitted in a well-ventilated location away from any source of ignition, such as naked flames and away from other people.
- Do not twist or pinch the hose. Ensure that it is routed away from the stove body so as to prevent deterioration / damage to the hose caused by heat.
- Connect the regulator to the cylinder by screwing on hand tight until fully engaged. (fig.4).
- Ensure that a complete gas seal has been made (check for the smell of gas around the connection joint). Do not check for leaks with a naked flame. Use warm soapy water applied to the joints and connections of the appliance. Any leakage will show up as bubbles around the leakage area.
- If you cannot rectify the gas leak do not use the appliance. If you are in doubt, contact your nearest stockist.

Disconnecting and changing the gas supply

- After use, and when replacing an empty cylinder, ensure that the appliance control knob turned to the off-position "•" and that the cylinder valve on the gas cylinder is closed before disconnecting the regulator from the gas cylinder.
- Do not smoke while disconnecting or changing the gas cylinder.
- Remove the regulator from the empty cylinder.
- Attach the regulator to the full cylinder, refer to the instructions above on how to connect the gas supply.
- Apply the same care and checking procedures as if fitting a new gas cylinder.

How to check if your gas cylinder is empty

- The easiest way to check if you are low on gas is by picking up your gas cylinder.
- If you think your gas cylinder is feeling a little lighter than you'd like, weighing the bottle is a great way to see how much gas is left. Most cylinders will have the empty weight stamped on either the neck or foot ring, and if the weight indicated on the stamp and the weight of your cylinder are the same, you're out of gas. You can then approximate the amount of gas you have left by the difference in weight.

3. Operating the Appliance

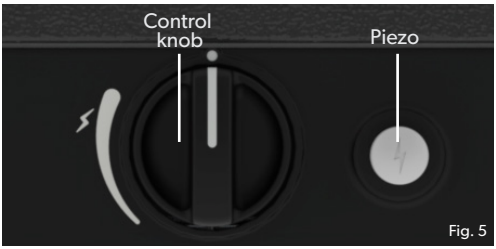

Fig. 5

- When operating this appliance, please take care to ensure that all parts are in good working order and that you have checked for any gas leaks before lighting the appliance with every use.
- Cooking surfaces can simply be placed and are ready to use. No assembly required.
- PLEASE NOTE: Please ensure all protective packaging and plastic are removed from the appliance before use.
- For additional safety, this appliance is fitted with a 'Flame Failure Device' (FFD), ensuring that the gas supply to the burner shuts off immediately should the flame inadvertently go out. In the event that this happens, be sure to turn off the gas supply by closing the gas cylinder valve.
  Caution: Please note that when cooking fatty meats some fat will splatter onto the unit which may cause flare-ups. Please use caution when handling such meats. The cooking temperatures are easily adjusted to suit your own requirements by turning the control knob to regulate the degree of heat.

Precautions to observe before lighting.

- Use this appliance only on a firm level surface.
- After prolonged storage, inspect the appliance for any insects and webs, which may affect gas flow.

Lighting the appliance using the piezo igniter

- It is recommended to remove any cooking surfaces when trying to light the appliance. This way it will be easy to see the burner when it is lit.
- To light up the appliance using the piezo igniter, push in and turn the control knob 90° in an anti-clockwise direction, then press the igniter button to ignite the gas. If the gas does not ignite on the first spark, turn the control knob back to its off-position "•". Try again, by pushing and turning the control knob anti-clockwise and push the igniter button to ignite the gas. If the gas has not ignited in the first two to three seconds you should close the control valve by turning the control knob back to its off-position "•".
- Do not hold the igniter button or control knob in for more than 15 seconds.

- If after 15 seconds the burner has not lit, stop operating the device and wait at least 1 minute to allow accumulated gas to escape before attempting a further ignition of the burner.
- Repeat the above process if necessary until the flame ignites. The flame should normally light up within the first one to two seconds.
- In the event of the burner flames being accidentally extinguished, turn the control knob to the off-position "•" and do not attempt to re-ignite the burner for at least 1 minute.

Lighting up using a BBQ lighter

- When starting cold, the appliance may be lit from the top prior to fitting the desired cooking surface. When lighting up a hot appliance, it is recommended that this be done by sticking a barbecue lighter through one of the vent holes underneath the burner, until it is in line with the burner (DO NOT place the BBQ lighter through the large hole directly underneath the burner). Ignite the BBQ lighter. Whilst the BBQ lighter is lit, push and turn the control knob anti-clockwise to light the burner.

General

- Once the appliance is lit, the flame intensity may be adjusted by turning the control knob anti-clockwise to reduce the flame or clockwise to increase the flame.
- When cooking food with a high fat content, flaring may occur if the selected heat setting is too high. Should this happen, turn the heat down until the flaring ceases.
- Do not move the appliance when in use. It is unsafe practice to move the appliance whilst lit and may cause flaring.
- After use, first close the control valve on the gas cylinder (where applicable). When the flame has extinguished, close the control valve on the appliance.

4. Component List

P/C : 303F2-20

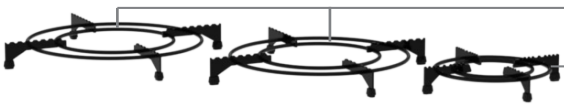

5. CeramiCoat Cooking Options

Most CADAC | Dometic cooking surfaces feature a durable ceramic coating made from inorganic materials and manufactured without intentionally adding PFOA or PFOS. Compared to traditional PTFE non-stick coatings, this ceramic surface is designed for improved wear resistance and long-lasting performance.

Preparation and use

- 'Seasoning': before using the cooking surface for the first time, you can season it to give the cooking surface a thin protective layer that prevents food from sticking. It is not required but we do recommend it. It's very easy: lightly rub cooking oil on the surface and then place over medium heat for 2 - 3 minutes. When it cools, wash the cooking surface with soapy water before use and grease it lightly with some oil (cooking oil of your choice, e.g. sunflower oil). It's ready to go!
- Note: CeramiCoat coating conducts heat better than products with a regular (PTFE) non-stick coating. We therefore recommend using only 75% of the power of what you are used to.
- Never leave the cooking surface on the heat source without oil. Apply a thin layer of oil with a kitchen paper towel or a brush before placing the cooking surface on the heat source. Make sure you have oiled all parts, so with e.g. a BBQ grid include the raised edges as well.
- We recommend frying in sunflower oil or rapeseed oil because of the high burning point. Olive oil can have a relatively low burning point, which can cause the ingredients to stick to the pan or burn. We therefore do not recommend using olive oil.
  Tip: bring meat or fish to room temperature before frying. This will prevent sticking to the cooking surface.
- Always use silicone and/or wooden utensils so that the CeramiCoat coating is not damaged. Never use metal utensils as this can damage the coating.

Cleaning your cooking surfaces

- Always allow cooking surfaces to cool completely before immersing it in water.
- The CeramiCoat coating is 'Easy Clean'. Warm soapy water with a soft sponge is sufficient for cleaning the cooking surfaces with CeramiCoat coating. Avoid scouring pads or steel wool.
- For stubborn stains or residues, you can try the 'vinegar method': pour a layer of vinegar onto the grill and heat the grill slightly. The vinegar does not have to boil and should certainly not evaporate completely. Pour the vinegar from the grill, and clean the grill with soapy water. Note: heating vinegar can give off an unpleasant smell.
- The CADAC | Dometic Soft Soak (sold separately) is the ideal companion product to facilitate soaking. When using the Soft Soak, we recommend placing the cooking surface face down which allows for maximum soaking and also uses less water.
- Any stubborn stains that remain after soaking, can be loosened and brushed away using the CADAC | Dometic Soft Soak Brush (sold separately).

Soft Soak Brush

Soaking with the Soft Soak 2 Cook

Maintenance

- We recommend to add a little oil to the cooking surface after cleaning and spread it with kitchen paper. The oil seals the surface from the outside air and moisture. It also ensures that the food does not burn into the surface.
- Place the cooking surface in a plastic bag before you put it into its storage bag so you are ensured the storage bag remains clean and oil free.

Cooking options

ATTENTION: When using the 2 Cook Dome (optional accessory) during cooking, in order to prevent the Dome handle from becoming very hot, limit use of the Dome to 8 minutes on a high heat setting, or 16 minutes on low heat setting. **Always use oven gloves or mitts to protect your hands**.

- These are the available cooking options.
  Grilling: This cooking option is ideal for fat-free grilling of chicken, sausages, chops, kebabs, fish or vegetables. For this type of cooking, use the grill plate.
  Caution: Please note that when cooking fatty meats some fat will splatter onto the unit which may cause flare-ups. Please use caution when handling such meats. The cooking temperatures are easily adjusted to suit your own requirements by turning the control knob to regulate the degree of heat.
  Frying: This option is ideal for stir-fries, fish, breakfast, pancakes, prawns, paella and vegetables. For this type of cooking, use the flat grill. Please note that being a shallow pan, it is not suitable for deep-frying. The easy clean surface encourages the minimum use of fat for healthy cooking.
  Boiling: For this type of cooking, place the pot stand in its locator grooves ensuring that it is properly seated. Place a suitable pot (not less than 180mm diameter and not more than 250mm diameter). One liter of water will boil in approximately 6 minutes depending on the conditions, size of pot used, etc.
  Note: When using small sized pots do not attempt to use pots with plastic handles as these can get extremely hot.
  Pan frying with the Paella Pan: This cooking option is ideal for preparing stir-fries. paellas, risottos, pasta dishes, traditional breakfasts etc. The Paella Pan 30 is made from a high quality pressed aluminium which allows for excellent heat distribution and retention.
  Coffee: The ideal option for brewing a cup of coffee. Anytime, anywhere!

6. Cleaning the appliance

- It is recommended to clean your appliance after every use. This will prolong the life of your appliance.
- Allow the appliance to cool down before you clean it.
- Use a damp cloth wrung out in a solution of soapy water to clean exterior surfaces.
- To clean the stove body, simply wipe with a damp cloth using a little detergent, if necessary.
- DO NOT IMMERSE YOUR APPLIANCE IN WATER as this will allow water to get into the burner tube causing the appliance to malfunction.
- Make sure that no water gets onto the burners or pilot/light area. Wipe the appliance completely dry before use.
- Do not use abrasive cleaners as they may damage the surfaces.
- Clean the appliance after each use.
- Do not use any high-pressure steam equipment or a water injector to clean the appliance.
- Note: For stubborn stains, CADAC oven cleaner may be used.

7. Storage

Always allow the unit to cool down and be cleaned before storing.

- Turn off the gas supply to the appliance, disconnect and remove the gas supply from the appliance.
- Never store an appliance with the gas supply connected, this is an unsafe practice.
- Store the appliance and gas supply in a well-ventilated area away from combustible material. Storage of cylinders should preferably be outdoors and must NOT be in a basement.

8. Maintenance & troubleshooting

- ALL MAINTENANCE AND SERVICING OF THE APPLIANCE NEEDS TO BE CARRIED OUT BY AN AUTHORISED PERSON ONLY.
- If you clean and maintain your appliance on a regular basis, the life of your appliance will extend and the possibility of problems will decrease.
- We recommend the service of your appliance to be every twelve (12) months by a service agent to ensure continued efficient operation.

Troubleshooting

In the case of a spattering flame or injector blockage:

- Clean your burner ports in case of an over spill.
- Should the appliance operate abnormally after storage and all checks have not isolated the problem, the injector may be blocked. A blocked injector would be indicated by a weaker yellowish flame or no flame at all in extreme cases. Contact an authorized service agent if a blocked jet is suspected.

9. Accessories

A variety of compatible accessories are available. Contact your local supplier for availability.

	203-100-AU SKU: 9610004468		8640 SKU: 9610004164		203-200-AU SKU: 9610004469
	203-900-AU SKU: 9610004518		98326 SKU: 9610004465		203-300-AU SKU: 9610004470
	98720C SKU: 9610004294		98710C SKU: 9610004292		98715C SKU: 9610004293
	203-400-AU SKU: 9610004471		203-500C SKU: 9610004361		

11. Dometic Warranty & Service

Dometic Australia Pty Ltd ABN 62086366305
As the purchaser of a new Dometic product you are entitled to full warranty cover under the conditions herein.

TO REGISTER YOUR WARRANTY
Please complete and return this form together with a copy of your receipt within 60 days of purchase to:

Please note: If you choose not to register this warranty, you must keep a copy of your receipt to ensure you will receive warranty service should it be needed.

Dometic Australia Pty Ltd
PO Box 2495
BURLEIGH BC QLD 4220

Dometic New Zealand Limited
PO Box 12011
PENROSE, AUCKLAND 1642

On receipt of these documents your details will be entered into our customer data base. This will make it easier for you in the unlikely event that you require a warranty repair anywhere in our network of service agents across the country. If you need assistance filling out this form or making a claim under this warranty please call us on 1800 21 21 21 (Aus) or 09 622 1490 (NZ)

Name: _____ Signature: _____

Address: _____

State: _____ Postcode: _____

Tel: (home) _____ (mobile) _____

Email: _____

Model purchased: _____

Serial number: _____

Date of purchase: _____

Retailer's name: _____

Retailer's address: _____

WARRANTY PERIOD DEPENDS ON PRODUCT:

WARRANTY PERIOD	PRODUCTS COVERED	WARRANTY DESCRIPTION
2 year	•3 Cook Turbo FFD	Full warranty covering all manufacturing defects for 2 year from date of purchase

IMPORTANT Please keep this side with a copy of your receipt

DOMETIC WARRANTY

If the product does not work as it should, please contact the manufacturer's branch in your country (see back page).

For repair and warranty processing, please include the following documents when you send in the device:
- A copy of the receipt with purchasing date
- A reason for the claim or description of the fault

HOW TO SUBMIT A WARRANTY CLAIM

Please call Dometic on 1800 21 21 21 (Aus)

THE WARRANTY DOES NOT COVER

To avoid doubt, your Dometic Warranty does not protect against the following;

1. Any damage caused as a result of misuse or environmental impacts.
2. Any damage from improper preparation before first use, such as weathering your product.
3. Faulty installation or modification made during installation or set up of the product.
4. Cosmetic blemishes or fading that do not affect the operation of the product and could be considered normal wear and tear – or caused by external or environmental influences.
5. Accidental or malicious damage by misuse, negligence or faults caused by a failure to provide routine maintenance.
6. Faults that have resulted from normal wear and tear, including punctures, tearing, rusting or corrosion.
7. Accessories such as pegs and guy ropes.
8. Repairs carried out by repair agents that are not authorised by Dometic.
9. Products used commercially, or on a permanent site are not covered by the full warranty due to Commercial or permanent static use.
10. Negligence, accidental or deliberate misuse, or alterations to the product not approved by Dometic.
11. Any loss or damage caused by a failure to follow the manufacturer's instructions for usage, installation, operation or maintenance.
12. Damage/failure to operate caused as a result of improper installation or infestations of vermin, pests or insects.
13. Perceived faults where the product is operating within the normal range of Dometic performance specifications and these performance specifications were made known to you prior to purchase.

Note: removing screws or otherwise opening the outer case will void the warranty

AUSTRALIA ONLY

Our goods come with guarantees that cannot be excluded under the Australian Consumer Law. You are entitled to a replacement or refund for a major failure and for compensation for any other reasonably foreseeable loss or damage. You are also entitled to have the goods repaired or replaced if the goods fail to be of acceptable quality and the failure does not amount to a major failure. The benefits provided to you as the consumer by this warranty are in addition to other rights and remedies available to you under the law.

NEW ZEALAND ONLY

This warranty policy is subject to the conditions and guarantees which are mandatory as implied by the Consumer Guarantees Act 1993 (NZ).

AUSTRALIA
Dometic Australia Pty. Ltd.
7 Nursery Ave,Clayton South,
VIC, 3169, Australia
☎ 1800 212121 · 🖷 +61 7 55076001
sales@dometic.com

AUSTRIA
Dometic Austria GmbH
Neudorferstraße 108
A-2353 Guntramsdorf
☎ +43 2236 908070
🖷 +43 2236 90807060
Mail: info@dometic.at

BENELUX
Dometic Branch Office Belgium
Zincstraat 3
B-1500 Halle
☎ +32 2 3598040
🖷 +32 2 3598050
Mail: info@dometic.be

BRAZIL
Dometic DO Brasil LTDA
Avenida Paulista 1754, conj. 111
SP 01310-920 Sao Paulo
☎ +55 11 3251 3352
🖷 +55 11 3251 3362
Mail: info@dometic.com.br

DENMARK
Dometic Denmark A/S
Nordensvej 15, Taulov
DK-7000 Fredericia
☎ +45 75585966
🖷 +45 75586307
Mail: info@dometic.dk

FINLAND
Dometic Finland OY
Mestarintie 4
FIN-01730 Vantaa
☎ +358 20 7413220
🖷 +358 9 7593700
Mail: info@dometic.fi

FRANCE
Dometic SAS
ZA du Pré de la Dame Jeanne
B.P. 5
F-60128 Plailly
☎ +33 3 44633525
🖷 +33 3 44633518
Mail : vehiculesdeloisirs@dometic.fr

GERMANY
Dometic WAECO International GmbH
Hollefeldstraße 63 · D-48282 Emsdetten
☎ +49 (0) 2572 879-195
🖷 +49 (0) 2572 879-322
Mail: info@dometic-waeco.de

HONG KONG
Dometic Group Asia Pacific
Suites 2207-11 · 22/F · Tower 1
The Gateway · 25 Canton Road,
Tsim Sha Tsui · Kowloon
☎ +852 2 4611386
🖷 +852 2 4665553
Mail: info@waeco.com.hk

HUNGARY
Dometic Zrt. Sales Office
Kerékgyártó u. 5.
H-1147 Budapest
☎ +36 1 468 4400
🖷 +36 1 468 4401
Mail: budapest@dometic.hu

ITALY
Dometic Italy S.r.l.
Via Virgilio, 3
I-47122 Forlì (FC)
☎ +39 0543 754901
🖷 +39 0543 754983
Mail: vendite@dometic.it

JAPAN
Dometic KK
Maekawa-Shibaura, Bldg. 2
2-13-9 Shibaura Minato-ku
Tokyo 108-0023
☎ +81 3 5445 3333
🖷 +81 3 5445 3339
Mail: info@dometic.jp

MEXICO
Dometic Mx, S. de R. L. de C. V.
Circuito Médicos No. 6 Local 1
Colonia Ciudad Satélite
CP 53100 Naucalpan de Juárez
Estado de México
☎ +52 55 5374 4108
🖷 +52 55 5393 4683
Mail: info@dometic.com.mx

NETHERLANDS
Dometic Benelux B.V.
Ecustraat 3
NL-4879 NP Etten-Leur
☎ +31 76 5029000
🖷 +31 76 5029019
Mail: info@dometic.nl

NEW ZEALAND
Dometic New Zealand Ltd.
P O Box 12011
1642 Penrose, Auckland
☎ +64 9 622 1490
🖷 +64 9 622 1573
Mail: customerservices@dometic.co.nz

NORWAY
Dometic Norway AS
Østerøyveien 46
N-3232 Sandefjord
☎ +47 33428450
🖷 +47 33428459
Mail: firmapost@dometic.no

POLAND
Dometic Poland Sp. z o.o.
Ul. Puławska 435A
PL-02-801 Warszawa
☎ +48 22 414 3200
🖷 +48 22 414 3201
Mail: info@dometic.pl

PORTUGAL
Dometic Spain, S.L.
Branch Office em Portugal
Rot. de São Gonçalo nº 1 – Esc. 12
2775-399 Carcavelos
☎ +351 219 244 173
🖷 +351 219 243 206
Mail: info@dometic.pt

RUSSIA
Dometic RUS LLC
Komsomolskaya square 6-1
RU-107140 Moscow
☎ +7 495 780 79 39
🖷 +7 495 916 56 53
Mail: info@dometic.ru

SINGAPORE
Dometic Pte Ltd
18 Boon Lay Way 06–140 Trade Hub 21
Singapore 609966
☎ +65 6795 3177
🖷 +65 6862 6620
Mail: dometic@dometic.com.sg

SLOVAKIA
Dometic Slovakia s.r.o. Sales Office Bratislava
Nádražná 34/A
900 28 Ivánka pri Dunaji
☎ / 🖷 +421 2 45 529 680
Mail: bratislava@dometic.com

SOUTH AFRICA
Dometic (Pty) Ltd.
Regional Office
South Africa & Sub-Saharan Africa
2 Avalon Road
West Lake View Ext 11
Modderfontein 1645
Johannesburg
☎ +27 11 4504978
🖷 +27 11 4504976
Mail: info@dometic.co.za

SPAIN
Dometic Spain S.L.
Avda. Sierra del Guadarrama, 16
E-28691 Villanueva de la Cañada
Madrid
☎ +34 902 111 042
🖷 +34 900 100 245
Mail: info@dometic.es

SWEDEN
Dometic Scandinavia AB
Gustaf Melins gata 7
S-42131 Västra Frölunda
☎ +46 31 7341100
🖷 +46 31 7341101
Mail: info@dometicgroup.se

SWITZERLAND
Dometic Switzerland AG
Riedackerstrasse 7a
CH-8153 Rümlang
☎ +41 44 8187171
🖷 +41 44 8187191
Mail: info@dometic.ch

UNITED ARAB EMIRATES
Dometic Middle East FZCO
P. O. Box 17860
S-D 6, Jebel Ali Freezone
Dubai
☎ +971 4 883 3858
🖷 +971 4 883 3868
Mail: info@dometic.ae

UNITED KINGDOM
Dometic UK Ltd.
Dometic House, The Brewery
Blandford St. Mary
Dorset DT11 9LS
☎ +44 344 626 0133
🖷 +44 344 626 0143
Mail: customerservices@dometic.co.uk

USA
Dometic RV Division
1120 North Main Street
Elkhart, IN 46515
☎ +1 574-264-2131