DOMETIC

STEERING SYSTEMS
MECHANICAL HELM KITS

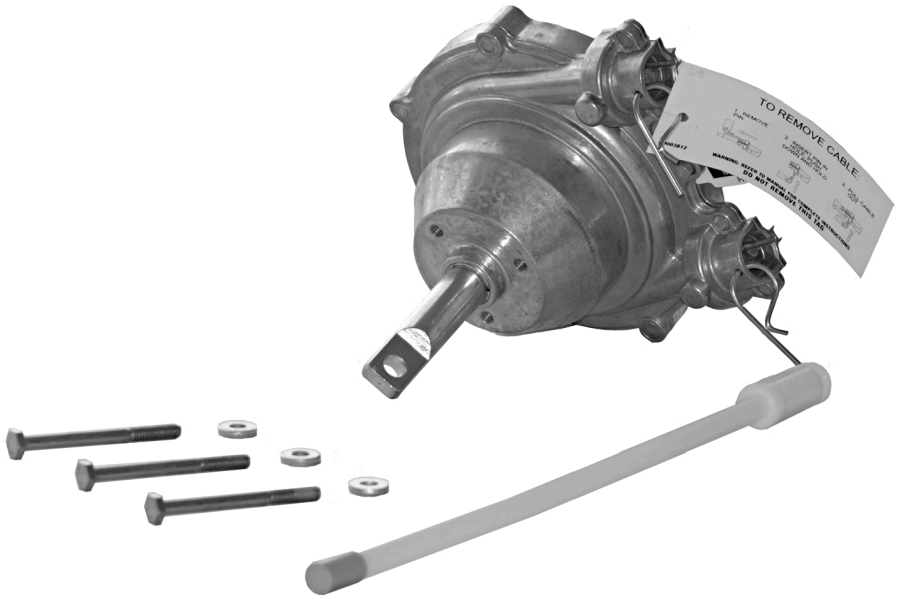

XTREME Non NFB Tilt Helm (SHX97626)

EN **Mechanical Steering for Inboard and Outboard Powered Vessels**
Short Installation and Operating Manual.....2

DE **Mechanische Lenkung für Wasserfahrzeuge mit Innen- und Außenbordmotor**
Montage- und Bedienungskurzanleitung.....9

FR **Direction mécanique pour les bateaux motorisés à bord et hors-bord**
Bref manuel d'installation et d'utilisation.....11

ES **Dirección mecánica para embarcaciones con motores dentroborda y fueraborda**
Guía breve de instalación y funcionamiento.....13

IT **Sterzo meccanico per imbarcazioni con motore entrobordo e fuoribordo**
Guida rapida di installazione e d'uso.....15

Safety Video

⚠ WARNING

Handling recreational marine vessel parts can expose you to chemicals such us phthalates and lead, which can cause cancer and reproductive harm. To minimize exposure, service the vessel outdoors or in a well-ventilated area, wear gloves, and wash your hands. For more information see www.P65Warnings.ca.gov/marine-vessel-parts.

English

1 Copyright 2
2 Important notes 2
3 Explanation of symbols 2
4 Safety instructions 2
5 Scope of delivery 2
6 Target groups 2
7 Intended use 3
8 Installation 3
9 Operation 6
10 Cleaning and maintenance 6
11 Warranty 6
12 Disposal 7
13 Drill template (SXH97626) 8

1 Copyright

© 2026 Dometic Group. The visual appearance of the contents of this manual is protected by copyright and design law. The underlying technical design and the products contained herein may be protected by design, patent or pending patent. The trademarks mentioned in this manual belong to Dometic Sweden AB. All rights are reserved.

2 Important notes

Please read these instructions carefully and follow all instructions, guidelines, and warnings included in this product manual in order to ensure that you install, use, and maintain the product properly at all times. These instructions MUST stay with this product.

By using the product, you hereby confirm that you have read all instructions, guidelines, and warnings carefully and that you understand and agree to abide by the terms and conditions as set forth herein. You agree to use this product only for the intended purpose and application and in accordance with the instructions, guidelines, and warnings as set forth in this product manual as well as in accordance with all applicable laws and regulations. A failure to read and follow the instructions and warnings set forth herein may result in an injury to yourself and others, damage to your product or damage to other property in the vicinity. This product manual, including the instructions, guidelines, and warnings, and related documentation, may be subject to changes and updates. For up-to-date product information, please visit documents.dometic.com.

3 Explanation of symbols

A signal word will identify safety messages and property damage messages, and also will indicate the degree or level of hazard seriousness.

DANGER!

› Indicates a hazardous situation that, if not avoided, will result in death or serious injury.

WARNING!

› Indicates a hazardous situation that, if not avoided, could result in death or serious injury.

NOTICE!

› Indicates a situation that, if not avoided, could result in property damage.

NOTE Supplementary information for operating the product.

4 Safety instructions

Safe operation of the product relies on correct installation and maintenance. Safe operation also depends on the boat operator's good judgment, boating knowledge, and skills.

- Know and obey all applicable federal, state, and municipal laws and regulations that govern boating in your region.
- Take a boating safety course.
- Never operate a boat while under the influence of drugs or alcohol.
- Wear a personal flotation device (PFD) that is approved for use by the proper agency in your region.
- Attach the engine shut-off lanyard to your PFD.

Safety Video

Watch this safety video to learn the correct usage of the steering system, see qr.dometic.com/bfqlLt. Watching the safety video does not replace reading and following all the instructions, guidelines, and warnings included in the product manual.

5 Scope of delivery

In addition to this kit, you will need the following parts to complete the tilt system:

- Sport or Sport Plus tilt mechanism
- Dometic SSCX64 Xtremexx steering cable

NOTE The xx in the name indicates the length of the steering cable in feet.

- Engine connection kit
- Steering wheel, maximum wheel diameter 16 in (406.4 mm), maximum wheel dish 5 in (127 mm)

6 Target groups

The mechanical and electrical installation and setup of the device must be performed by a qualified technician who has demonstrated skill and knowledge related to the construction and operation of marine equipment and installations, and who is familiar with the applicable regulations of the country in which the equipment is to be installed and/or used, and has received safety training to identify and avoid the hazards involved.

7 Intended use

The Dometic Xtreme non NFB (No Feedback) Tilt Helm, referred to as the "steering system" or "product," is a mechanical steering solution for boats powered by inboard and outboard engines. The helms, cables, and all other parts of this system are specifically designed and meant to be used only in marine boating applications.

NOTE Outboard applications: This system is only recommended as replacement for the original system as installed by the boat manufacturer. We always recommend NFB (No Feedback) helms for outboard applications. NFB helms lock out steering loads caused by propeller torque eliminating the driver fatigue normally experienced with a standard helm. Dometic NFB steering helms are a drop-in replacement for Xtreme helm systems.

This product is only suitable for the intended purpose and application in accordance with these instructions.

This manual provides information that is necessary for proper installation and/or operation of the product. Poor installation and/or improper operating or maintenance will result in unsatisfactory performance and a possible failure.

The manufacturer accepts no liability for any injury or damage to the product resulting from:

- Incorrect installation or assembly
- Incorrect maintenance or use of spare parts other than original spare parts provided by the manufacturer
- Alterations to the product without express permission from the manufacturer
- Use for purposes other than those described in this manual

Dometic reserves the right to change product appearance and product specifications.

8 Installation

WARNING! Loss of steering control hazard
Failure to obey the following warnings could result in property damage, serious injury, or death.

> All steering components must be compatible with, and rated for, the engine installed on the boat.
> Do not substitute any part of the system without written authorization from the manufacturer.
> Do not use a wheel-mounted trim switch with coiled cord. The cord could wrap around the steering wheel shaft and inhibit the steering.
> Do not connect any electric ground wires to the helm. Doing so can cause an electrolytic reaction in the steering system, which might lead to system failure or significantly shorten its lifespan.
> Never take helms apart for any reason.

WARNING! Unsafe boat operation hazard
Failure to obey the following warning could effect the performance of the boat and its safe operation and result in property damage, serious injury, or death.

> To prevent heavy steering loads, and to get the best steering performance, adjust the outboard motor, tilt position or trim tabs as instructed in the motor manufacturer's operation manual.
> When replacing a steering system, stick with the type (rotary or rack) that the boat manufacturer originally installed. Never switch your steering from a dual cable to a single cable system.

NOTICE! Damage hazard

> Helms and cable assemblies come pre-lubricated and are ready for installation. Do not add any extra lubricant to these assemblies. Using other lubricants may harm the steering cable, leading to the steering cable seizing or wearing out too soon.
> Keep the cable and drive assembly clean during installation. Dirt will damage the system and cause premature wear. This notice does not include the engine output ram end of the cable.

Keep these guidelines in mind when installing the system:

- Make sure you have all the necessary components ready before starting.
- Inspect the steering cable for stiffness, cracks, or any other damage. If any issues are found, replace the steering cable.
- Once the installation is complete, carry out the system inspection checks as explained in this manual.
- Fix any problems before handing the boat over to the owner.

NOTE Use only Dometic SSCX64 Xtreme steering cable with this helm.

8.1.1 Preparing the location

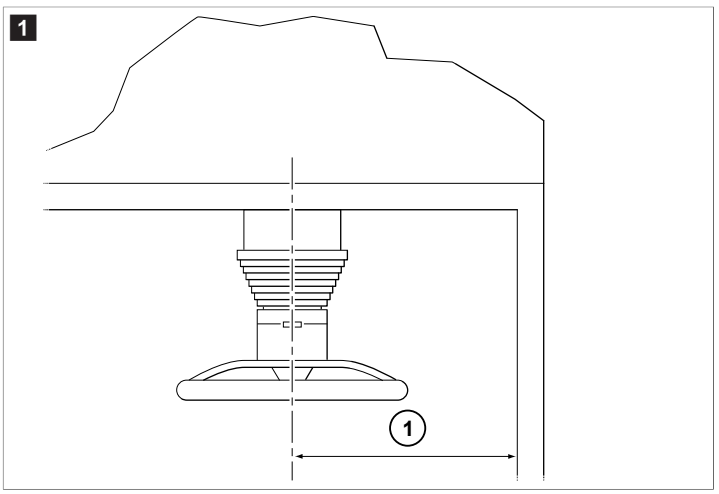

1	12 in (304.8 mm)

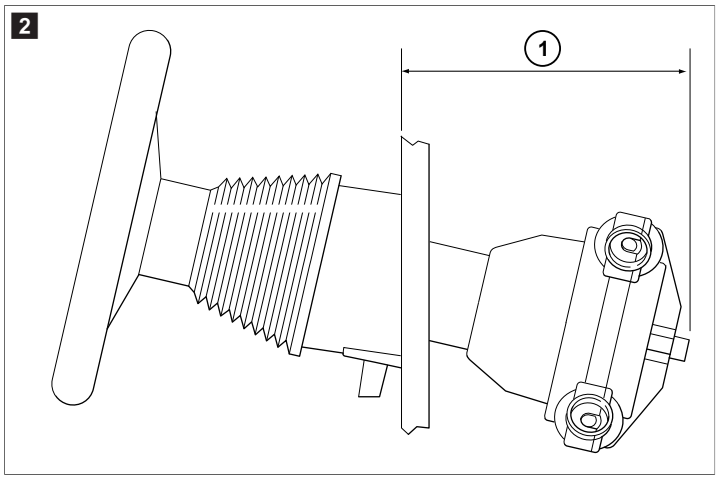

1	5.5 in (139.7 mm)

1. Locate the position for the steering wheel on the console or dashboard.

   NOTE Ensure that the minimum clearances shown in Fig. 1 on page 3 and Fig. 2 on page 4 are kept, and make sure the steering wheel does not get in the way of other dashboard equipment, like engine controls and instruments.

2. Position the template on the console or dashboard in the chosen spot. See Drill template (SXH97626) on page 8.
3. Drill three 5/16 in diameter holes.
4. Drill one 2-7/8 in diameter hole.

8.1.2 Mounting the helm

The helm assembly can be installed to allow cable routing on either the port or starboard side. Whenever possible, steering cables should be routed to the starboard side of the boat to help balance the engine's torque.

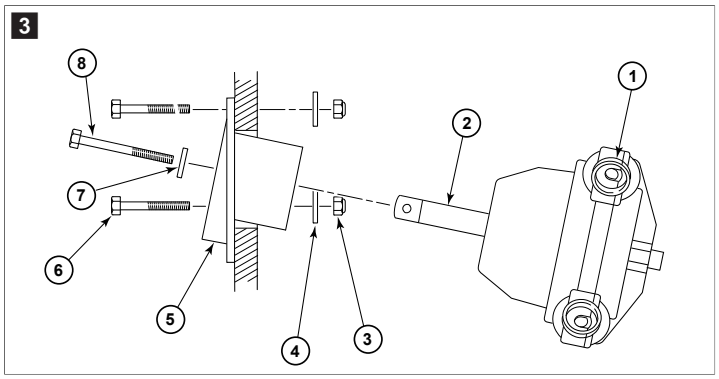

1	Cable entry spigot	**5**	Helm mounting plate*
2	Helm shaft	**6**	2-1/8 in hex bolt*
3	Locknut*	**7**	Washer
4	OD flat washer*	**8**	2-3/4 in hex bolt

NOTE * Included with the tilt mechanism

1. Use three hex bolts, three OD flat washers, and three locknuts to secure the helm mounting plate in place.

   NOTE Be sure the washers are on the inside of the dash as shown in Fig. 3 on page 4.

2. Tighten the hex bolts securely.
3. Insert the helm shaft into the hole in the mounting plate. Make sure the helm's cable entry spigot points toward the direction of the cable routing when you look at entry spigot from the front of the dash.
4. Use the hex bolt and washer to to secure the helm to the helm mounting plate.

8.1.3 Installing the tilt mechanism and steering wheel

Refer to the instructions included with the tilt mechanism hardware kit. Follow these instructions to install the tilt mechanism and attach the steering wheel.

8.1.4 Routing the steering cable

NOTICE! Damage hazard

- Do not bend the cable to a radius smaller than 8 in (203.2 mm).
- Do not bundle cables together with electrical wiring.
- Do not let cables rest on sharp edges, as this could cause chafing.

Keep the following considerations in mind when routing the steering cable:

- Select a path that has the least number of bends, ensuring the bends are as wide as possible.

  NOTE Sharp or frequent bends can make steering difficult and cause the cable to wear out too quickly.

- When you need to pass through a bulkhead, you must create a hole with a diameter of 1.5 in (38.1 mm).
- Loosely clamp or tie cables to provide support at regular intervals.

8.1.5 Installing the steering cable

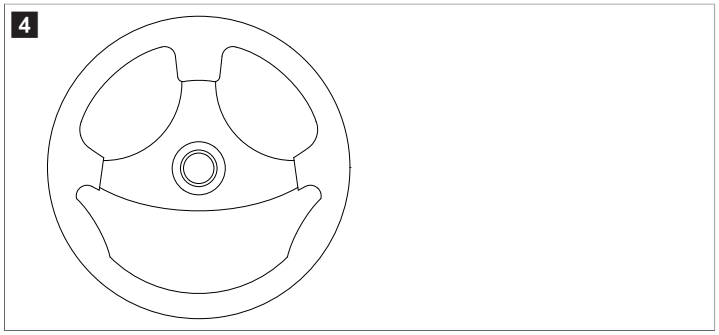

1. Position the steering wheel as shown in Fig. 4 on page 5.

NOTE The steering wheel will be properly oriented after the installation is finished.

2. Remove the pin from the cable entry spigot of the helm. Do not remove the tag from the pin.

NOTE The back of the helm is marked to show a typical installation.

3. Remove the protective sleeve from the cable end. Be careful to keep the lubricated cable end clean and free from any dirt.

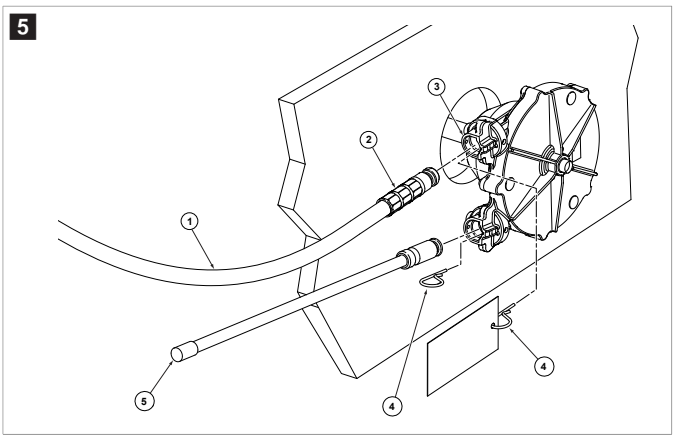

1	Cable	**4**	Pin
2	Cable end fitting	**5**	Spent travel tube
3	Upper entry spigot		

4. Feed the cable into the upper entry spigot until the cable touches the internal gears.
5. Turn the steering wheel counterclockwise to pull the cable completely into the helm.
6. Continue turning the wheel until the cable's end fitting goes into the entry spigot, and the wheel stops turning.

NOTE During this process, you should hear a click, which indicates that the locking mechanism has engaged.

7. Turn the steering wheel all the way in the opposite direction until the steering wheel stops and cannot turn any further.
8. Check that the cable end fitting is securely held inside the entry spigot.

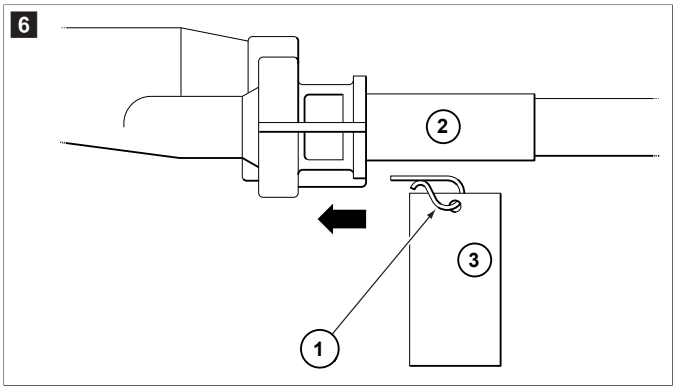

1	Pin	**3**	Tag
2	Cable		

9. Replace the pin as shown in Fig. 5 on page 5, ensuring that the pin is completely seated.

NOTE If the pin cannot be inserted, it means the cable is not completely seated in the helm.

10. Push on the cable to make sure it is fully inserted.

NOTE Do not remove the tag from the pin.

11. Turn the steering wheel all the way to both ends of its rotation. Check that the cable fitting stays secure in the entry spigot and make sure there is no binding when steering.
12. Feed the spent travel tube over the exposed cable end. Keep pushing the spent travel tube until you hear a click, which means it is locked into place in the helm spigot.
13. Insert the pin as shown in Fig. 6 on page 5, ensuring that the pin is fully seated.
14. Rotate the steering wheel several times from one stop to the other, and observe how the steering cable output ram moves.

NOTE On starboard-routed cables, turning the steering wheel clockwise should make the ram extend. On port-routed cables, turning the steering wheel clockwise should make the ram retract.

8.1.6 Connecting to the engine

NOTICE! Damage hazard

- Coat the output ram end of the steering cable with high-quality waterproof marine grease before placing it into the support tube.
- The coupler nut has a locking ring within its threads. Ensure the nut is tightened completely so that its internal plastic locking ring is properly engaged. If this nut is not fully tightened, it will cause too much play in the steering system.
- Ensure that the cable's output end is not bent during installation into the engine.

Attach the cable to the boat and the engine following the instructions provided with the connection kit.

NOTE The engine may need to be removed from the boat to install the cable.

9 Operation

DANGER! Loss of steering control, collision, and/or ejection from the boat hazard

Failure to obey these warnings will result in death or serious injury.

- If the steering cable feels stiff when used, the cable is not safe to operate. Replace the cable immediately.
- Tighten or replace any loose or missing fasteners before operating the boat.
- Do not cover any cracks in the steering cable with tape or other sealants. Doing so might lead to the cable failing suddenly and without warning.

WARNING! Loss of steering control hazard

- The engine can be over-trimmed, causing the steering torque to increase so much that the steering wheel becomes impossible to turn, even if you don't feel the torque at the wheel. This might make the steering feel locked. This situation can happen when jack plates are used to raise the engine on the transom. The only way to fix this is by either lowering the boat speed or adjusting the engine trim to a less extreme position. Until you fully understand how the boat and power trim work together, be very careful when making trim adjustments.

WARNING! Unsafe boat operation hazard

Failure to obey the following warnings could result in death or serious injury.

- Do not use the boat if any part is not working correctly.
- Do not let anyone who is not familiar with the controls (like the steering, shift, throttle, and so forth) operate the boat.

Keep the following guidelines in mind when using the system:

- Make sure the steering wheel responds right away when turned.
- Look for any parts that are stuck, loose, worn out, or damaged. If any are found, fix or replace them.
- Inspect the steering cable for stiffness, cracks, or any other damage. If any issues are found, replace the steering cable.

10 Cleaning and maintenance

WARNING! Loss of steering control

- Keep all moving parts clean and free from salt buildup or other foreign materials. These can affect how the moving parts work and may cause steering problems.

NOTICE! Damage hazard

- Do not use acetone or cleaners that contain ammonia, acids, or other corrosive ingredients on any steering components.
- Some cleaning products made for fiberglass hulls can strongly corrode stainless steel shafts. If you use a hull cleaning agent, be careful not to spray the cleaning agent on the steering system. If any spray gets on on the steering system, rinse the spray off right away with fresh, clean water.

Table 1: Maintenance schedule

Interval	Task
After every use	Rinse the steering system thoroughly with fresh, clean water.
After a few hours running	Inspect all fasteners and the entire steering system to ensure they are secure and in good condition.
Periodically	• Apply waterproof marine grease to lubricate the cable output ram and the engine tilt tube. • Disconnect the cable and clean both the support tube and the telescopic end of the cable thoroughly. After cleaning, apply a waterproof marine grease to lubricate them. • Check for signs of corrosion. Replace any parts that show corrosion. When replacing hardware, always use self-locking hardware, just like the original parts. • Inspect all fasteners and the entire steering system to ensure they are secure and in good condition.

11 Warranty

Refer to the sections below for information about warranty and warranty support in the US, Canada, and all other regions.

Australia and New Zealand

Limited warranty available at qr.dometic.com/bfnePC. If you have questions or to obtain a printed copy of the limited warranty free of charge, contact:

```
DOMETIC AUSTRALIA PTY LTD
1 JOHN DUNCAN COURT
VARSITY LAKES, QLD, 4227
1800-212-121

DOMETIC NEW ZEALAND LTD
373 NEILSON STREET
PENROSE, AUCKLAND, 1061
+64 9 622 1490
```

Australia only

Our goods come with guarantees that cannot be excluded under the Australian Consumer Law. You are entitled to a replacement or refund for a major failure and for compensation for any other reasonably foreseeable loss or damage. You are also entitled to have the goods repaired or replaced if the goods fail to be of acceptable quality and the failure does not amount to a major failure. The benefits provided to you as the consumer by this warranty are in addition to other rights and remedies available to you under the law.

New Zealand only

This warranty policy is subject to the conditions and guarantees which are mandatory as implied by the Consumer Guarantees Act 1993(NZ).

Local support

Please find local support at the following link address: dometic.com/dealer

United States and Canada

Limited warranty available at qr.dometic.com/bfneEw.

If you have questions or to obtain a printed copy of the limited warranty free of charge, contact:

```
DOMETIC CORPORATION
801 N SPRING ST
SPARTA, TN. 38583
1-800-730-4082
ts.mechanical@dometic.com
```

All other regions

The statutory warranty period applies. If the product is defective, please contact the manufacturer's branch in your country (see dometic.com/dealer) or your retailer.

For repair and warranty processing, please include the following documents when you send in the device:

- A copy of the receipt with purchasing date
- A reason for the claim or description of the fault

Note that self-repair or nonprofessional repair can have safety consequences and might void the warranty.

12 Disposal

Place the packaging material in the appropriate recycling waste bins, wherever possible. Consult a local recycling center or specialist dealer for details about how to dispose of the product in accordance with the applicable disposal regulations.

13 Drill template (SXH97626)

NOTE If this template has been downloaded electronically or copied from another document, please verify all template dimensions prior to cutting.

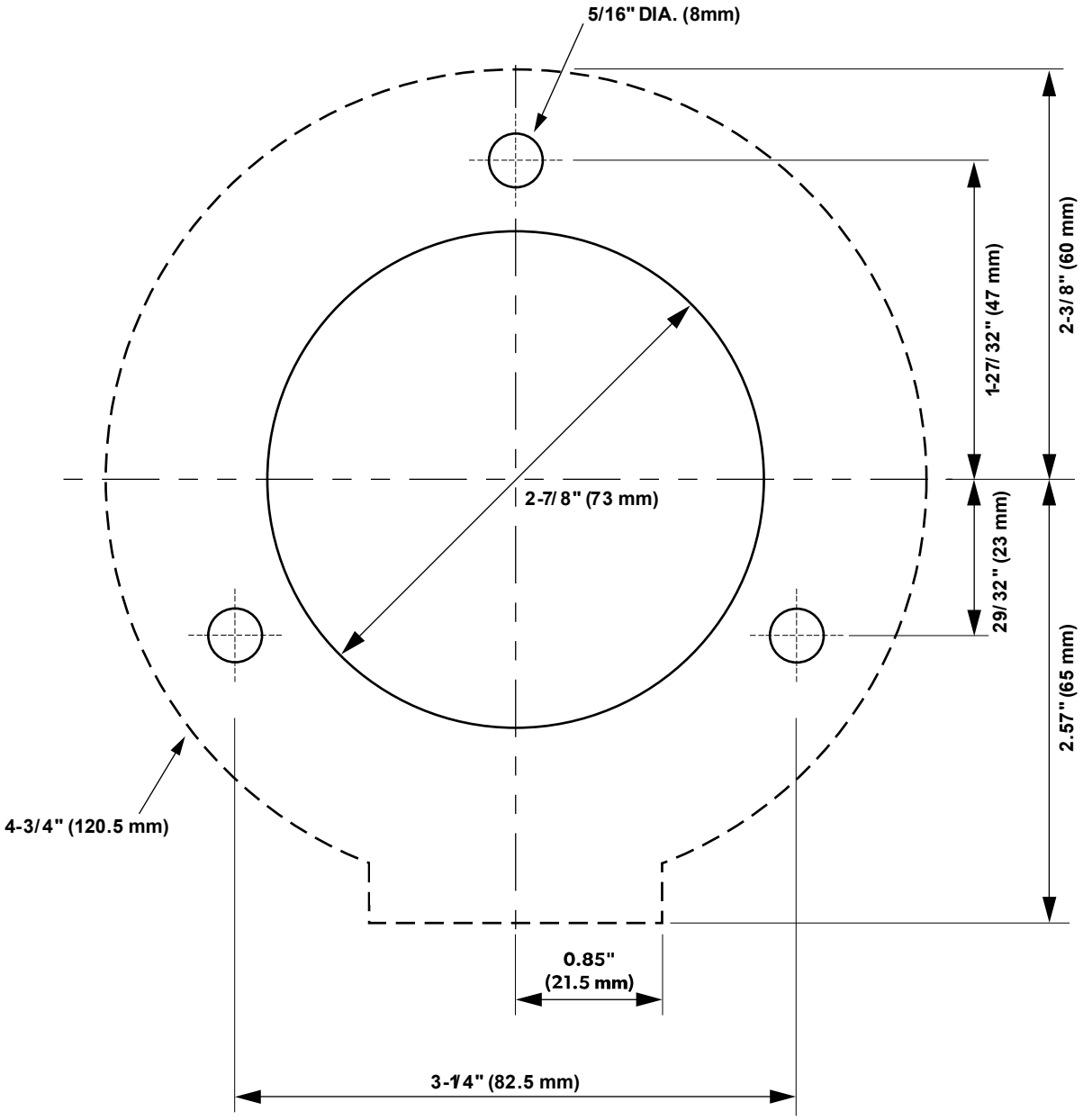

Deutsch

1 Urheberschutz....9
2 Zugehörige Dokumente.... 9
3 Sicherheitshinweise....9
4 Installation....9
5 Betrieb....10

1 Urheberschutz

© 2026 Dometic Group. Das optische Erscheinungsbild des Inhalts dieses Handbuchs ist durch das Urheber- und Geschmacksmusterrecht geschützt. Das zugrundeliegende technische Design und die hierin enthaltenen Produkte können durch ein Design, ein Patent oder eine Patentanmeldung geschützt sein. Die in diesem Handbuch erwähnten Marken sind Eigentum von Dometic Sweden AB. Alle Rechte vorbehalten.

2 Zugehörige Dokumente

Die vollständige Montage- und Bedienungsanleitung finden Sie in allen Sprachen online unter qr.dometic.com/bg2aCT.

3 Sicherheitshinweise

Der sichere Betrieb des Produkts ist nur bei sachgemäßer Installation und Wartung gewährleistet. Der sichere Betrieb hängt auch vom Urteilsvermögen des Betreibers sowie von dessen Kenntnissen und Fähigkeiten ab.

- Machen Sie sich mit allen geltenden Gesetzen und Vorschriften auf Bundes-, Landes- und Gemeindeebene über Bootsfahrten in Ihrer Region vertraut, und befolgen Sie sie.
- Nehmen Sie an einem Sicherheitskurs für Bootsfahrt teil.
- Betreiben Sie ein Boot niemals unter dem Einfluss von Drogen oder Alkohol.
- Tragen Sie eine Auftriebshilfe, die von der zuständigen Behörde in Ihrer Region zugelassen ist.
- Befestigen Sie die Motorabschaltleine an der Auftriebshilfe.

Safety Video

Sehen Sie sich dieses Sicherheitsvideo an, um mehr über die korrekte Verwendung des Lenksystems zu erfahren, siehe qr.dometic.com/bfqlLt. Das Anschauen des Sicherheitsvideos ersetzt nicht das Lesen und Befolgen aller Anweisungen, Richtlinien und Warnhinweise im Produkthandbuch.

4 Installation

WARNUNG! Gefährdung durch Kontrollverlust über die Lenkung

Die Nichtbefolgung der folgenden Warnhinweise kann zu Sachschäden, schweren Verletzungen oder zum Tod führen.

- Alle Teile der Lenkung müssen mit dem im Boot installierten Motor kompatibel und dafür ausgelegt sein.
- Ohne schriftliche Genehmigung des Herstellers dürfen keine Teile des Systems ersetzt werden.
- Verwenden Sie keinen radmontierten Trimmschalter mit Spiralkabel. Das Kabel könnte sich um die Steuerradwelle wickeln und die Lenkung blockieren.
- Schließen Sie keine elektrischen Erdungskabel an das Lenkgetriebe an. Andernfalls kann es zu einer elektrolytischen Reaktion im Steuerungssystem kommen, die einen Systemausfall oder eine erhebliche Verkürzung der Lebensdauer verursacht.
- Zerlegen Sie niemals ein Lenkgetriebe.

WARNUNG! Gefährdung durch unsicheren Bootsbetrieb

Die Nichtbefolgung der folgenden Warnung kann die Leistung des Bootes und den sicheren Betrieb beeinträchtigen und zu Sachschäden, schweren Verletzungen oder zum Tod führen.

- Um hohe Lenkkräfte zu vermeiden und die beste Lenkleistung zu erzielen, stellen Sie den Außenbordmotor, die Neigungsposition oder die Trimmklappen gemäß den Anweisungen in der Bedienungsanleitung des Motorherstellers ein.
- Wenn Sie ein Steuerungssystem austauschen, verwenden Sie dieselbe Ausführung, die vom Bootshersteller ursprünglich installiert wurde (Rotations- oder Zahnstangenlenkung). Wechseln Sie niemals von einem Doppelseilsystem zu einem Einzelseilsystem.

ACHTUNG! Beschädigungsgefahr

- Lenkgetriebe und Kabel sind bei Auslieferung vorgeschmiert und installationsbereit. Schmieren Sie diese Baugruppen nicht mit zusätzlichem Schmiermittel. Die Verwendung anderer Schmiermittel kann Schäden am Steuerkabel verursachen, was zu einem Festfressen oder zu frühem Verschleiß führen kann.
- Halten Sie Kabel und Antriebseinheit während der Installation sauber. Schmutz beschädigt das System und führt zu vorzeitigem Verschleiß. Dieser Hinweis bezieht sich nicht auf das steuerkopfseitige Kabelende am Motor.

Beachten Sie bei der Installation des Systems die folgenden Vorgaben:

- Legen Sie vor Beginn alle erforderlichen Komponenten bereit.

- Prüfen Sie das Steuerkabel auf Steifigkeit, Risse und sonstige Schäden. Wenn Probleme festgestellt werden, ersetzen Sie das Steuerkabel.
- Führen Sie nach der Installation die Systeminspektionen gemäß den Anweisungen in diesem Handbuch durch.
- Beheben Sie alle Probleme, bevor Sie das Boot an den Eigner übergeben.

HINWEIS Verwenden Sie mit diesem Lenkgetriebe nur ein Steuerkabel des Typs Dometic SSCX64 Xtreme.

5 Betrieb

GEFAHR! Gefährdung durch Kontrollverlust über die Lenkung, Kollision und/oder Herausschleudern aus dem Boot

Nichtbeachtung dieser Warnungen führt zum Tod oder schwerer Verletzung.

- Wenn sich das Steuerkabel bei der Verwendung steif anfühlt, ist der Betrieb nicht sicher. Ersetzen Sie das Kabel unverzüglich.
- Bevor Sie das Boot in Betrieb nehmen, ziehen Sie alle lockeren Befestigungsteile fest, und ersetzen Sie alle fehlenden Befestigungsteile.
- Decken Sie Risse im Steuerkabel niemals mit Klebeband oder Dichtmitteln ab. Andernfalls kann es zum unerwarteten Bruch des Kabels kommen.

WARNUNG! Gefährdung durch Kontrollverlust über die Lenkung

- Der Motor kann übertrimmt werden, sodass das Lenkmoment so stark ansteigt, dass sich das Steuerrad nicht mehr drehen lässt, selbst wenn das Drehmoment am Steuerrad nicht zu spüren ist. Dabei kann es sich anfühlen, als sei die Lenkung blockiert. Diese Situation kann eintreten, wenn der Motor mithilfe von Stützplatten am Heckspiegel angehoben wird. Die einzige Möglichkeit zur Problembehebung besteht darin, entweder die Fahrgeschwindigkeit zu verringern oder die Trimmung des Motors weniger extrem einzustellen. Bis Sie vollständig verstanden haben, wie das Boot und das elektrische Trimmen zusammenarbeiten, seien Sie bei der Anpassung der Trimmung sehr vorsichtig.

WARNUNG! Gefährdung durch unsicheren Bootsbetrieb

Nichtbeachtung dieser Warnungen kann zum Tod oder schweren Verletzungen führen.

- Verwenden Sie das Boot nicht, wenn eine Komponente nicht ordnungsgemäß funktioniert.
- Lassen Sie keine Person das Boot bedienen, die mit den Steuerelementen (z. B. Steuerung, Schaltung, Gashebel) nicht vertraut ist.

Beachten Sie folgende Punkte bei der Verwendung des Systems:

- Stellen Sie sicher, dass das Steuerrad sofort auf die Drehung reagiert.
- Achten Sie auf feststeckende, lockere, verschlissene oder beschädigte Teile. Wenn Sie welche finden, reparieren oder ersetzen Sie sie.
- Prüfen Sie das Steuerkabel auf Steifigkeit, Risse und sonstige Schäden. Wenn Probleme festgestellt werden, ersetzen Sie das Steuerkabel.

Français

1 Droits d'auteur....11
2 Documents associés....11
3 Consignes de sécurité....11
4 Installation....11
5 Utilisation.... 12

1 Droits d'auteur

© 2026 Groupe Dometic. L'aspect visuel du contenu de ce manuel est protégé par le droit d'auteur et la législation sur les dessins et modèles. La conception technique sous-jacente et les produits contenus dans ce document peuvent être protégés par des droits de dessins et modèles, des brevets ou des brevets en instance. Les marques mentionnées dans ce manuel appartiennent à Dometic Sweden AB. Tous droits réservés.

2 Documents associés

Vous trouverez le manuel d'installation et d'utilisation complet, disponible en toutes les langues, en ligne sur qr.dometic.com/bg2aCT.

3 Consignes de sécurité

Le fonctionnement sûr du produit repose sur une installation et un entretien corrects. Le fonctionnement sûr dépend également du bon sens, des connaissances et des compétences de l'utilisateur du bateau.

- Connaître et respecter toutes les lois et réglementations fédérales, nationales et municipales applicables qui régissent la navigation de plaisance dans votre région.
- Suivez un cours de sécurité nautique.
- Ne conduisez jamais un bateau sous l'influence de drogues ou d'alcool.
- Portez un gilet de sauvetage approuvé par l'organisme compétent de votre région.
- Attachez la longe d'arrêt du moteur à votre gilet de sauvetage.

Safety Video

Regardez cette vidéo de sécurité pour apprendre à utiliser correctement le système de direction, voir qr.dometic.com/bfqlLt. Regarder la vidéo de sécurité ne remplace pas la lecture et le respect de toutes les instructions, directives et avertissements incluses dans le manuel du produit.

4 Installation

AVERTISSEMENT ! Risque de perte de contrôle de la direction

Le non-respect des avertissements suivants pourrait entraîner des dégâts matériels, des blessures graves ou la mort.

- Tous les éléments de direction doivent être compatibles avec le moteur installé sur le bateau et calibrés de façon adéquate.
- Ne remplacez aucune pièce du système sans l'autorisation écrite du fabricant.
- N'utilisez pas de commutateur « trim » monté sur le volant avec un cordon en spirale. Le cordon pourrait s'enrouler autour de l'arbre du volant et empêcher la direction.
- Ne connectez aucun fil de masse à la barre. Cela pourrait provoquer une réaction électrolytique dans le système de direction, ce qui pourrait entraîner une défaillance du système ou réduire considérablement sa durée de vie.
- Ne démontez jamais la barre pour quelque raison que ce soit.

AVERTISSEMENT ! Risque de fonctionnement dangereux du bateau

Le non-respect de l'avertissement suivant peut affecter les performances du bateau et son utilisation en toute sécurité et entraîner des dommages matériels, des blessures graves ou mortelles.

- Pour éviter de lourdes charges de direction et obtenir les meilleures performances de direction, réglez le moteur hors-bord, la position d'inclinaison ou les compensateurs comme indiqué dans le manuel d'utilisation du fabricant du moteur.
- Lors du remplacement d'un système de direction, respectez le type (rotatif ou à crémaillère) installé à l'origine par le fabricant du bateau. Ne changez jamais votre direction d'un système à câble double à un système à câble simple.

AVIS ! Risque d'endommagement

- La barre et les ensembles de câbles sont pré-lubrifiés et prêts à être installés. N'ajoutez pas de lubrifiant supplémentaire à ces ensembles. L'utilisation d'autres lubrifiants peut endommager le câble de direction et le gripper ou l'user trop tôt.
- Maintenez le câble et l'ensemble d'entraînement propres pendant l'installation. La saleté endommagera le système et provoquera une usure prématurée. Cet avertissement ne concerne pas l'extrémité du câble du vérin de sortie du moteur.

Tenez compte de ces consignes lors de l'installation du système :

- Assurez-vous que tous les composants nécessaires sont prêts avant de commencer.
- Vérifiez que le câble de direction n'est pas rigide, fissuré ou endommagé. En cas de problème, remplacez le câble de direction.
- Une fois l'installation terminée, effectuez les contrôles d'inspection du système comme expliqué dans ce manuel.
- Corrigez tout problème avant de remettre le bateau au propriétaire.

REMARQUE Utilisez uniquement le câble de direction Dometic SSCX64 Xtreme avec cette barre.

5 Utilisation

DANGER ! Perte de contrôle de la direction, collision et/ou éjection du bateau

Le non-respect de cette mise en garde entraînera des blessures graves, voire mortelles.

> Si le câble de direction semble rigide lors de l'utilisation, il n'est pas sûr de l'utiliser. Remplacez le câble immédiatement.

> Resserrez ou remplacez les fixations desserrées ou manquantes avant d'utiliser le bateau.

> Ne couvrez pas les fissures du câble de direction avec du ruban adhésif ou d'autres produits d'étanchéité. Cela pourrait entraîner une défaillance soudaine et sans avertissement du câble.

AVERTISSEMENT ! Risque de perte de contrôle de la direction

> Le réglage du trim du moteur est peut-être trop fort, entraînant une augmentation du couple de direction telle que le volant devient impossible à tourner, même si vous ne sentez pas le couple au volant. La direction peut alors sembler verrouillée. Cette situation peut se produire lorsque des chaises moteur sont utilisées pour relever le moteur sur l'arcasse. La seule façon de résoudre ce problème est de réduire la vitesse du bateau ou de régler le trim du moteur à une position moins extrême. Jusqu'à ce que vous compreniez parfaitement comment le bateau et le trim moteur fonctionnent ensemble, soyez très prudent lorsque vous effectuez les réglages du trim.

AVERTISSEMENT ! Risque de fonctionnement dangereux du bateau

Le non-respect des avertissements suivants peut entraîner des blessures graves, voire mortelles.

> N'utilisez pas le bateau si une pièce ne fonctionne pas correctement.

> Ne laissez personne qui ne connaît pas les commandes (comme la direction, le changement de vitesse, l'accélérateur, etc.) utiliser le bateau.

Tenez compte des consignes suivantes lors de l'utilisation du système :

- Assurez-vous que le volant réagit immédiatement lorsqu'il est tourné.
- Recherchez toute pièce coincée, desserrée, usée ou endommagée. Si vous en trouvez, réparez-les ou remplacez-les.
- Vérifiez que le câble de direction n'est pas rigide, fissuré ou endommagé. En cas de problème, remplacez le câble de direction.

Español

1 Derechos de autor....13
2 Documentación relacionada....13
3 Indicaciones de seguridad....13
4 Instalación....13
5 Funcionamiento....14

1 Derechos de autor

© 2026 Dometic Group. La apariencia visual del contenido de este manual está protegida por las leyes de derechos de autor y de diseño. El diseño técnico subyacente y los productos incluidos en este documento pueden estar protegidos por derechos de diseño, patentes o patentes en trámite. Las marcas comerciales mencionadas en este manual pertenecen a Dometic Sweden AB. Todos los derechos reservados.

2 Documentación relacionada

Las instrucciones de montaje y de uso completas están disponibles en línea en todos los idiomas en qr.dometic.com/bg2aCT.

3 Indicaciones de seguridad

El funcionamiento seguro del producto depende de una instalación y un mantenimiento correctos. También depende del buen juicio, conocimientos y habilidades del operario de la embarcación.

- Conozca y respete todas las leyes y normativas federales, estatales y municipales aplicables que rigen la navegación en su país.
- Realice un curso de seguridad náutica.
- Nunca maneje una embarcación bajo los efectos del alcohol o las drogas.
- Utilice un equipo individual de flotación (PFD) homologado por la autoridad competente de su país.
- Conecte el cordón de cierre del motor a su PFD.

Safety Video

Vea este vídeo sobre seguridad para conocer el uso adecuado del sistema de dirección; consulte qr.dometic.com/bfqlLt. Ver el vídeo sobre seguridad no exime de la lectura y el cumplimiento de todas las instrucciones, directrices y advertencias incluidas en el manual del producto.

4 Instalación

¡ADVERTENCIA! Peligro de pérdida de control de la dirección

El incumplimiento de las siguientes advertencias puede ocasionar daños a la propiedad, lesiones graves o la muerte.

- Todos los componentes de la dirección deben ser compatibles con el motor instalado en la embarcación.
- No sustituya ninguna pieza del sistema sin la autorización por escrito del fabricante.
- No utilice un interruptor de trimado montado en el volante con cable extraíble. El cable podría enrollarse alrededor del eje del volante y afectar a la dirección.
- No conecte ningún cable a tierra eléctrico al timón. Si lo hace, puede provocar una reacción electrolítica en el sistema de la dirección que podría ocasionar el fallo del sistema o acortar significativamente su vida útil.
- No desmonte nunca el timón bajo ningún concepto.

¡ADVERTENCIA! Peligro de funcionamiento no seguro de la embarcación

El incumplimiento de la siguiente advertencia podría afectar al rendimiento de la embarcación y a su funcionamiento seguro, lo que podría ocasionar daños a la propiedad, lesiones graves o la muerte.

- Para evitar la sobrecarga de la dirección y mejorar el rendimiento, ajuste el motor fueraborda, la posición de inclinación o las aletas de compensación según las instrucciones de uso del fabricante del motor.
- Al sustituir el sistema de la dirección, utilice el tipo (giratorio o de cremallera) instalado originalmente por el fabricante de la embarcación. Nunca cambie el sistema de la dirección de cable doble a uno de cable único.

¡AVISO! Peligro de daños

- Los conjuntos de timones y cables vienen lubricados previamente y están listos para su instalación. No añada lubricante adicional a estos conjuntos. El uso de otros lubricantes puede dañar el cable de la dirección y provocar que se atasque o se desgaste demasiado pronto.
- Mantenga el conjunto del cable y de accionamiento limpios durante la instalación. La suciedad puede dañar el sistema y provocar un desgaste prematuro. Este aviso no incluye el extremo del cilindro de salida del cable del motor.

Tenga en cuenta estas directrices al instalar el sistema:

- Asegúrese de que tiene todos los componentes necesarios listos antes de comenzar con la instalación.
- Inspeccione el cable de la dirección en busca de rigidez, grietas o cualquier otro daño. Si se detecta algún problema, sustituya el cable de la dirección.

- Una vez finalizada la instalación, lleve a cabo las comprobaciones del sistema tal como se explican en estas instrucciones.
- Solucione cualquier problema antes de entregar la embarcación al propietario.

NOTA Con este timón, utilice solo el cable de la dirección Dometic SSCX64 Xtreme.

5 Funcionamiento

¡PELIGRO! Peligro de pérdida de control de la dirección, colisión o caída de la embarcación

El incumplimiento de estas advertencias puede acarrear la muerte o lesiones graves.

› Si el cable de la dirección está rígido al utilizarlo, no es seguro. Sustitúyalo inmediatamente.

› Apriete o sustituya cualquier dispositivo de fijación que falte o que esté suelto antes de utilizar la embarcación.

› No cubra ninguna grieta en el cable de la dirección con cinta u otros selladores. Si lo hace, el cable podría fallar de forma repentina y sin previo aviso.

¡ADVERTENCIA! Peligro de pérdida de control de la dirección

› El motor se puede trimar en exceso, lo que provoca un aumento del par de la dirección tan grande que es imposible girar el volante, incluso si no se percibe el par en el volante. Esto puede hacer que la dirección se note bloqueada. Esta situación puede ocurrir cuando se utilizan placas de montaje para elevar el motor en la popa. La única forma de solucionar esto es reduciendo la velocidad de la embarcación o ajustando el trimado del motor a una posición menos extrema. Hasta que comprenda completamente cómo funcionan la embarcación y el trimado, tenga mucho cuidado al trimar el motor.

¡ADVERTENCIA! Peligro de funcionamiento no seguro de la embarcación

El incumplimiento de las siguientes advertencias puede causar la muerte o lesiones graves.

› No utilice la embarcación si alguna pieza no funciona correctamente.

› No deje que nadie que no esté familiarizado con los controles (como el volante, la palanca de cambios, el acelerador, etc.) maneje la embarcación.

Tenga en cuenta las siguientes directrices al utilizar el sistema:

- Asegúrese de que el volante responde inmediatamente al girarlo.
- Busque piezas atascadas, sueltas, desgastadas o dañadas. Si encuentra alguna, repárela o sustitúyala.
- Inspeccione el cable de la dirección en busca de rigidez, grietas o cualquier otro daño. Si se detecta algún problema, sustituya el cable de la dirección.

Italiano

1 Copyright....15
2 Documenti correlati....15
3 Istruzioni per la sicurezza....15
4 Installazione....15
5 Funzionamento....16

1 Copyright

© 2026 Dometic Group. L'aspetto visivo del contenuto di questo manuale è protetto dalla legge sul diritto d'autore e sul design. Il design tecnico sottostante e i prodotti contenuti nel presente manuale possono essere protetti da design, brevetti o essere in attesa di brevetto. I marchi citati in questo manuale appartengono a Dometic Sweden AB. Tutti i diritti sono riservati.

2 Documenti correlati

Le istruzioni di montaggio e d'uso complete sono disponibili online in tutte le lingue all'indirizzo: qr.dometic.com/bg2aCT.

3 Istruzioni per la sicurezza

Il funzionamento sicuro del prodotto si basa su una corretta installazione e manutenzione. Inoltre, dipende anche dal buon senso, dalle conoscenze e dalle capacità dell'operatore dell'imbarcazione.

- È necessario conoscere e rispettare tutte le leggi e le normative federali, statali e comunali che disciplinano la navigazione nella propria regione.
- Seguire un corso di sicurezza nautica.
- Non guidare mai un'imbarcazione sotto l'effetto di droghe o alcol.
- Indossare un dispositivo di galleggiamento personale (PFD) approvato per l'uso dall'ente competente nella propria regione.
- Collegare il laccetto di spegnimento del motore al proprio PFD.

Safety Video

Guardare questo video sulla sicurezza per conoscere l'uso corretto del sistema di sterzo; vedere qr.dometic.com/bfqlLt. La visione del video sulla sicurezza non sostituisce la lettura e il rispetto di tutte le istruzioni, le linee guida e le avvertenze contenute nel manuale del prodotto.

4 Installazione

AVVERTENZA! Pericolo di perdita di controllo dello sterzo

La mancata osservanza dei seguenti avvisi può provocare danneggiamenti alla proprietà, gravi lesioni o morte delle persone.

- Tutti i componenti del sistema di sterzo devono essere compatibili e omologati per il motore installato sull'imbarcazione.
- Non è consentita la sostituzione di alcuna parte del sistema senza un'autorizzazione scritta dal fabbricante.
- Non utilizzare interruttori trim montati sul timone con cavo spiralato poiché quest'ultimo potrebbe avvolgersi attorno all'albero del timone e compromettere il corretto funzionamento dello sterzo.
- Non collegare alcun cavo elettrico di messa a terra al timone. Ciò potrebbe causare una reazione elettrolitica nel sistema di sterzo, con il rischio di guasto o di una significativa riduzione della sua durata operativa.
- Non smontare mai i timoni per nessun motivo;

AVVERTENZA! Pericolo di utilizzo di imbarcazioni non sicure

Il mancato rispetto delle seguenti istruzioni può compromettere le prestazioni dell'imbarcazione e la sicurezza della navigazione, con il rischio di danni materiali, lesioni gravi o morte.

- Per evitare carichi eccessivi sul sistema di sterzo e garantire prestazioni ottimali, è necessario regolare il motore fuoribordo, l'inclinazione e i flap di assetto secondo quanto indicato nel manuale d'uso del fabbricante del motore.
- In caso di sostituzione del sistema di sterzo, è necessario installare lo stesso tipo di timone (sistema rotativo o a cremagliera) che il fabbricante dell'imbarcazione aveva originariamente montato. Non cambiare mai lo sterzo da un sistema a doppio cavo a uno a cavo singolo.

AVVISO! Rischio di danni

- Il meccanismo di sterzo e i gruppi di cavi vengono forniti pre-lubrificati e sono pronti per l'installazione. Non aggiungere altro lubrificante. L'uso di lubrificanti può danneggiare il cavo di sterzo, causando il grippaggio o un'usura prematura.
- Durante l'installazione, tenere puliti il cavo e il gruppo di trasmissione: la presenza di sporco può danneggiare il sistema e provocarne un'usura anticipata. Questo avviso non si applica all'estremità del cavo del pistone di uscita del motore.

Durante l'installazione del sistema, attenersi alle seguenti linee guida:

- Assicurarsi di avere a disposizione tutti i componenti necessari prima di iniziare.
- Controllare che il cavo dello sterzo non sia rigido, incrinato o danneggiato. In caso di problemi, sostituire il cavo dello sterzo.
- Al termine dell'installazione, eseguire i controlli di verifica del sistema come descritto nel presente manuale.
- Risolvere eventuali problemi prima di consegnare l'imbarcazione al proprietario.

NOTA Utilizzare solo il cavo dello sterzo Dometic SSCX64 Xtreme con questo timone.

5 Funzionamento

PERICOLO! Pericolo di perdita del controllo dello sterzo, collisione e/o espulsione dall'imbarcazione

La mancata osservanza di queste avvertenze può causare la morte o lesioni gravi.

> Se il cavo di sterzo risulta rigido durante l'utilizzo, non è sicuro utilizzarlo. Sostituire immediatamente il cavo.

> Serrare o sostituire eventuali dispositivi di fissaggio allentati o mancanti prima di utilizzare l'imbarcazione.

> Non coprire eventuali crepe presenti sul cavo di sterzo con nastro adesivo o altri mastici. In caso contrario, il cavo potrebbe guastarsi improvvisamente e senza preavviso.

AVVERTENZA! Pericolo di perdita di controllo dello sterzo

> Il motore può essere inclinato eccessivamente, causando un aumento della coppia di sterzo tale da rendere impossibile la rotazione del timone, anche se non si avverte la coppia al volante. Ciò potrebbe bloccare lo sterzo. Tale situazione può verificarsi quando si utilizzano jack plate per sollevare il motore sullo specchio di poppa. L'unico modo per risolvere il problema è ridurre la velocità dell'imbarcazione oppure regolare l'assetto del motore in una posizione meno estrema. Fino a quando non si ha una piena comprensione del funzionamento dell'imbarcazione e del trim elettrico, è necessario prestare la massima attenzione durante le regolazioni dell'assetto.

AVVERTENZA! Pericolo di utilizzo di imbarcazioni non sicure

L'inosservanza di queste avvertenze potrebbe causare lesioni gravi o mortali.

> Non utilizzare l'imbarcazione se una parte qualsiasi non funziona correttamente.

> Non permettere a persone non esperte nell'uso dei comandi (come volante, cambio, acceleratore, ecc.) di manovrare l'imbarcazione.

Durante l'utilizzo del sistema, tenere presenti le seguenti considerazioni:

- Assicurarsi che il timone risponda immediatamente quando viene ruotato.
- Verificare la presenza di componenti bloccati, allentati, usurati o danneggiati. In caso di problemi, riparare o sostituire i componenti.
- Controllare che il cavo dello sterzo non sia rigido, incrinato o danneggiato. In caso di problemi, sostituire il cavo dello sterzo.

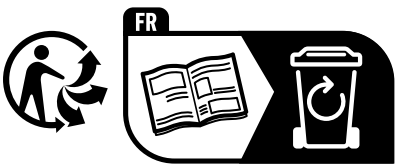

dometic.com

YOUR LOCAL DEALER

dometic.com/dealer

YOUR LOCAL SUPPORT

dometic.com/contact

YOUR LOCAL SALES OFFICE

dometic.com/sales-offices

4445104776 IS-SHX97626 Rev. 6 2026-06-15

A complete list of Dometic companies, which comprise the Dometic Group, can be found in the public filings of:
DOMETIC GROUP AB • Hemvärnsgatan 15 • SE-17154 Solna • Sweden