DOMETIC

AC AND VENTILATION

IBIS CORE 3000

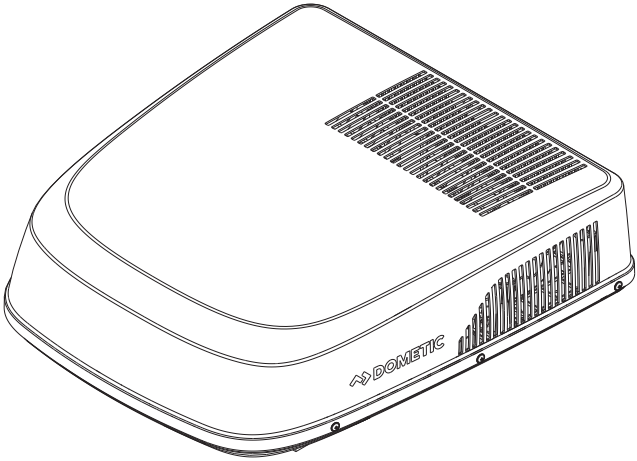

Dometic Ibis Core 3000

EN **Roof Air Conditioner**
Operating Manual..... 3

Copyright

© 2026 Dometic Group. The visual appearance of the contents of this manual is protected by copyright and design law. The underlying technical design and the products contained herein may be protected by design, patent or pending patent. The trademarks mentioned in this manual belong to Dometic Sweden AB. All rights are reserved.

English

1 Important notes....3
2 Cyber security....3
3 Related documents....3
4 Explanation of symbols....3
5 Safety instructions....4
6 Explanations of symbols on the device....5
7 Intended use....5
8 Technical description....5
9 Operation....8
10 Cleaning and maintenance....15
11 Troubleshooting....17
12 Disposal....19
13 Warranty....20
14 Technical data....20

1 Important notes

Please read these instructions carefully and follow all instructions, guidelines, and warnings included in this product manual in order to ensure that you install, use, and maintain the product properly at all times. These instructions MUST stay with this product.

By using the product, you hereby confirm that you have read all instructions, guidelines, and warnings carefully and that you understand and agree to abide by the terms and conditions as set forth herein. You agree to use this product only for the intended purpose and application and in accordance with the instructions, guidelines, and warnings as set forth in this product manual as well as in accordance with all applicable laws and regulations. A failure to read and follow the instructions and warnings set forth herein may result in an injury to yourself and others, damage to your product or damage to other property in the vicinity. This product manual, including the instructions, guidelines, and warnings, and related documentation, may be subject to changes and updates. For up-to-date product information, please visit documents.dometic.com.

2 Cyber security

We confirm that this product complies with the Cyber Security Rules 2025 (Australia). The statement of compliance is available at documents.dometic.com. To report a security incident, email productcybersecurity@dometic.com. Security updates will be provided for a minimum of five years after the manufacturing date.

3 Related documents

Find the detailed installation manual at qr.dometic.com/bggWUe.

4 Explanation of symbols

A signal word will identify safety messages and property damage messages, and also will indicate the degree or level of hazard seriousness.

WARNING!

> Indicates a hazardous situation that, if not avoided, could result in death or serious injury.

NOTICE!

> Indicates a situation that, if not avoided, could result in property damage.

NOTE Supplementary information for operating the product.

5 Safety instructions

General safety

WARNING! Failure to obey these warnings could result in death or serious injury.

- This appliance is not intended for use by persons (including children) with reduced physical, sensory or mental capabilities, or lack of experience and knowledge, unless they have been given supervision or instruction concerning use of the appliance by a person responsible for their safety.
- Children should be supervised to ensure that they do not play with the appliance.
- Cleaning shall not be performed by children without supervision.
- Do not pierce or burn the appliance.
- Do not make any alterations or conversions to the appliance.
- Do not damage the refrigerant circuit.
- If the supply cord is damaged, it must be replaced by the manufacturer, its service agent or similarly qualified personnel in order to avoid a hazard.
- Be aware that refrigerants may not contain an odor.
- Do **not** undo the upper cover of the appliance in the event of a fire. Use approved extinguishing agents. Do not use water to extinguish fires.
- In the case that the appliance contains an ionizer, consult your physician if you have a medical condition. The ionizer can produce ozone (O3) in small quantities. If you suffer from lung disease, asthma, heart disease, respiratory disease, respiratory problems, or have an ozone sensitivity, consult your physician to determine whether the use of this device is safe for you.
- Repair of the appliance may only be carried out by qualified personnel who are familiar with the risks involved and the relevant regulations. Inadequate repairs may cause serious hazards.For repair service, contact the service center in your country (see dometic.com/dealer).
- Servicing shall only be performed as recommended by the manufacturer.
- Maintenance shall only be performed as recommended by the equipment manufacturer. Maintenance and repair requiring the assistance of other qualified personnel shall be carried out under the supervision of the person competent in the use of flammable refrigerants.
- Always disconnect the power supply when working on the appliance.
- Never drive through automatic car washes when the appliance is mounted.

NOTICE! Damage hazard

- The appliance shall be stored so as to prevent mechanical damage from occurring.
- The appliance shall be stored in a room without continuously operating open flames (for example an operating gas appliance) and ignition sources (for example an operating electric heater).
- The appliance shall be stored horizontally at a dry, ventilated and covered location.

Safety when operating

WARNING! Failure to obey these warnings could result in death or serious injury.

- Only operate the appliance if you are certain that the housing and the cables are not damaged.
- Do not use the appliance near flammable fluids or in closed rooms.
- Ensure that no combustible objects are stored or installed near the air outlet. A distance of at least 50 cm must be kept.

> Do not reach into air outlets or insert any foreign objects in the appliance.
> Keep the ventilation openings clear of obstruction.

NOTICE! Damage hazard

> Do not use means to accelerate the defrosting process or to clean, other than those recommended by the manufacturer.
> If faults occur in the refrigerant circuit, the appliance must be checked and repaired by the manufacturer, its service agent or similarly qualified personnel in order to avoid a hazard.

6 Explanations of symbols on the device

A2L

Warning! Low burning velocity material.

USA/Canada only. Warning! Risk of fire / Flammable materials

Read operating manual.

Read service manual.

7 Intended use

The roof air conditioner is intended to be used for installation on the roof of a caravan or recreational vehicle to provide cooling and heating.

The roof air conditioner is **not** suitable for trains, houses, and apartments. The roof air conditioner is **not** suitable for installation in construction machines, agricultural machines, or similar equipment.

This product is only suitable for the intended purpose and application in accordance with these instructions.

This manual provides information that is necessary for proper installation and/or operation of the product. Poor installation and/or improper operation or maintenance will result in unsatisfactory performance and a possible failure.

The manufacturer accepts no liability for any injury or damage to the product resulting from:

- Incorrect installation, assembly or connection, including excess voltage
- Incorrect maintenance or use of spare parts other than original spare parts provided by the manufacturer
- Alterations to the product without express permission from the manufacturer
- Use for purposes other than those described in this manual

Dometic reserves the right to change product appearance and product specifications.

8 Technical description

The roof air conditioner is intended for vehicles with the following roof thicknesses:

- 25 mm … 60 mm for a roof cutout of 400 mm × 400 mm
- 32 mm … 60 mm for a roof cutout of 360 mm × 360 mm

The roof air conditioner will operate at ambient temperatures between – 2°C … 52°C. The roof air conditioner is designed to be installed within ± 10 ° of the horizontal plane.

8.1 Remote control

1

Control and display elements Fig. 1 on page 6:

Button	**Description**
—	**Display** Displays the following: • Time • Selected room temperature (target value) in °C • Actual room temperature • Air conditioning mode • Fan speed • Symbols for active additional functions • Battery status
⏻	Switches the roof air conditioner on or to stand-by mode.
+	Increases the currently displayed value.
−	Reduces the currently displayed value.

Button	Description
	Selects the fan speed (Setting the fan speed manually on page 9).
MODE	Selects the air conditioning mode (only for models with automatic mode). The corresponding symbol is displayed.
	Activates the sleep function (only for models with sleep mode). The ☾ symbol is displayed.
SET	Confirms and saves settings.
	Sets the timer and the clock.
	Switches the ambient lights in the air distribution box on or off.
	Press once to display the current interior temperature. The symbol is displayed. Press twice to display the set temperature.
	Activates the I feel function. The symbol is displayed. Every 10 min the I feel function adjusts the target temperature to the actual temperature measured by the remote control.
	Displays that the remote control's batteries are empty. Replace the batteries (Replacing the remote control batteries on page 11).
	Displays that the remote control is transmitting values to the roof air conditioner.

8.2 Air conditioning modes

Air conditioning mode	Displayed symbol	Description
Automatic	A	You specify the temperature, and the roof air conditioner brings the interior to this temperature by heating or cooling and by controlling the necessary fan speed.
Cooling		You specify the temperature and fan settings, and the roof air conditioner cools the interior to this temperature.
Heating		You specify the temperature and fan settings, and the roof air conditioner heats the interior to this temperature. The fan will only start after 2 min (on low speed) and then after around 5 min will go to the set fan speed (after the evaporator reaches temperature).
Circulation		You specify the fan settings, and the roof air conditioner circulates air without heating or cooling.
Dehumidifying		The roof air conditioner removes moisture from the air without heating or cooling the interior thus decreasing the relative air humidity.
Air purifier		The roof air conditioner ionizes the air, thus collecting dust and particles including viruses and bacteria from the air. This mode is available via upgrade kit.

8.3 Additional functions

Additional function	Display message	Description
Timer	ON 88:88	The roof air conditioner is switched on at the specified time.
	88:88 OFF	The roof air conditioner is switched off at the specified time.
	ON 88:88 88:88 OFF	The roof air conditioner is switched on and off at the specified times.
Sleep	☾	The sleep function reduces the fan speed and the compressor speed to reduce the noise levels for comfortable sleeping.
I Feel		The remote control measures the room temperature and transmits this measurement to the roof air conditioner every 10 min. The roof air conditioner adapts the target value to this measurement.
Soft start		The peak current that the compressor start produces is reduced by the soft start function. If a generator is used as power supply, the generator will not be overloaded.

9 Operation

9.1 Before initial use

Inspection before starting up

Before switching on the roof air conditioner, observe the following:

> Check whether the supply voltage and frequency correspond to the values specified in Technical data on page 20.

> Ensure that both the air intake openings and the air louvres are free. All ventilation grilles must always be kept free to ensure that the roof air conditioner is able to operate at maximum capacity.

Preparing the remote control

> Insert the batteries (Replacing the remote control batteries on page 11).

Setting the time

> Set the current time (Setting the current time on page 10).

9.2 Tips for enhanced performance

To optimize the performance of the roof air conditioner, observe the following tips:

- Improve the heat insulation of your vehicle by sealing gaps and hanging reflective blinds or curtains on your windows.
- Select an appropriate temperature and fan speed.
- Align the air nozzles sensibly.
- Ensure that the air nozzles and air intake openings are not covered by cloths, paper, or other objects.
- If the vehicle has been under direct sunlight for a long time, operate the roof air conditioner in the circulation( ) mode with the windows open for a while before switching to the Cooling (❄) mode.
- Avoid opening doors and windows for as long as possible in the Cooling (❄) mode.

9.3 Basic notes on operation

The roof air conditioner has two operating modes:

Operating mode	Description
Standby	The roof air conditioner is ready for operation and can be switched on with the remote control.
On	The roof air conditioner is in operation.

Use the remote control to perform the following operations:
- Switch between standby mode and on mode.
- Adjust various settings.
- Select additional functions.

9.4 Tips for using the remote control

Observe the following tips when using the remote control:
- Point the remote control directly at the IR receiver located on the ADB of the roof air conditioner.
- Upon pressing a button on the remote control, the corresponding settings and values are instantaneously transmitted to the roof air conditioner.
- The roof air conditioner confirms the receipt of data with a beep sound.
- To quickly increase or decrease values (e.g., temperature, fan speed), press and hold the "+" or "-" buttons.

9.5 Switching the roof air conditioner on and to standby

NOTE
- When the roof air conditioner is switched on, it resumes operation with the previously set values.
- The roof air conditioner can be switched off only by cutting the power supply.

> Press the ⏻ button on the remote control to switch the roof air conditioner between on and standby modes.

9.6 Selecting the air conditioning mode

> Select the desired air conditioning mode using the **MODE** button (see Air conditioning modes on page 7).
✓ The roof air conditioner confirms the receipt of the values with a beep sound. The roof air conditioner is switched to the selected air conditioning mode.

9.7 Setting the fan speed manually

In all modes, except for the Automatic (**A**) and Dehumidifying (💧) modes, the fan speed can be selected manually.

Display message	Description
	Low fan level
	Medium fan level
	High fan level.
	Turbo fan level.
A	Automatic mode (the fan speed is adjusted based on the ambient temperature).

> Press the button of the remote control to select the desired fan speed.
v The roof air conditioner confirms the receipt of the values with a beep sound.

The new fan speed is set.

9.8 Setting the temperature

> Use the + or – button on the remote control to adjust the desired temperature.
v The roof air conditioner confirms the receipt of the values with a beep sound.

The temperature is set on the roof air conditioner.

9.9 Setting the current time

The remote control needs the current time in order to program the timer. The time is shown on the remote control display.

1. Press and hold the button in order to get into the mode for setting the time.
v The time flashes on the remote control display.
2. Use the **+** or **–** button to set the current time. Press and hold the **+** or **–** button longer than 2 s to increase or decrease the time quicker.
3. Press the button to confirm the time.

9.10 Setting the timer

The timer function allows you to set a specific time period for air conditioning. You can specify the switch-on time, the switch-to-standby time, or both values.

The timer function is set via remote control.

NOTE The remote control will return to its initial mode if no button is pressed on the remote control for 15 s during timer setup.

Setting the switch-on timer

1. Select the desired air conditioning mode and set all required values (e.g., temperature).
2. If necessary, switch the roof air conditioner to standby.

   The switch-on timer can only be set when the roof air conditioner is in **standby** mode.
3. Press the button once.
v The ON 88:88 symbol flashes on the remote control display.
4. Use the + or – button to set the time when the roof air conditioner shall be switched on.
5. Press the button.

   The switch-on timer is set. The roof air conditioner will be switched on with the selected settings at the specified time.

Setting the switch-to-standby timer

1. If necessary, switch the roof air conditioner on.

   The switch-to-standby timer can only be set when the roof air conditioner is switched **on**.
2. Press the button twice.
v The 88:88 OFF symbol flashes on the remote control display.
3. Use the + or – button to set the time when the roof air conditioner shall be switched to standby.
4. Press the button.

   The switch-to-standby timer is set. The roof air conditioner will be switched to standby at the specified time.

Setting the switch-on timer and the switch-to-standby timer

1. Select the desired air conditioning mode and all required values (for example the temperature).
2. Press the button three times.
   - The ON 28:88 28:88 OFF symbol is shown on the remote control display. The ON symbol flashes.
3. Use the + or – button to set the time when the roof air conditioner shall be switched on.
4. Press the button.
   - The **OFF** symbol flashes.
5. Use the + or – button to set the time when the roof air conditioner shall be switched to standby.
6. Press the button.
   - The switch-on and switch-to-standby timers are set. The roof air conditioner will be operating for the specified time period.

Cancelling the timer

> To **cancel** preset timer, press the button once.
- The ON 28:88 28:88 OFF symbols disappear. Preset values are discarded.

9.11 Setting the sleep function

The sleep function is only available in Cooling (❄) or Heating (☼) modes.

The sleep function limits the fan speed to a lower level to reduce the noise levels for easier sleeping.

The sleep function additionally limits the compressor speed.

> To activate the sleep function proceed as follows:
  a) Set the required temperature (Setting the temperature on page 10).
  b) Press the button on the remote control.
- The symbol ☾ appears in the remote control display. The sleep function is activated.
> To deactivate the sleep function, press the or the MODE button on the remote control.
- The symbol ☾ disappears in the remote control display. The sleep function is deactivated.

9.12 Activating the I feel function

When this function is active, the remote control measures the room temperature and transmits this measurement to the roof air conditioner every 10 min. The roof air conditioner adapts the target value to this measurement. The I feel function is only active when the temperature range is between 18°C … 29°C.

The remote control should not be kept in a part of the room that is considerably warmer or colder than the average room temperature. For example, don`t leave the remote control in the sun or in front of the roof air conditioner.

When the temperature rises above 29°C or falls below 18°C , the I feel function is deactivated. The symbol flashes three times in the display and then turns off.

1. Press the button.
   - The I feel function is activated.
     The symbol appears in the display.
2. Position the remote control so that it points at the IR receiver on the ADB. Otherwise, the values cannot be transmitted to the roof air conditioner.

9.13 Replacing the remote control batteries

NOTE The remote control display may still be bright even if the batteries are running low. Replace the batteries when the remote control indicates low batteries.

> Replace the batteries.

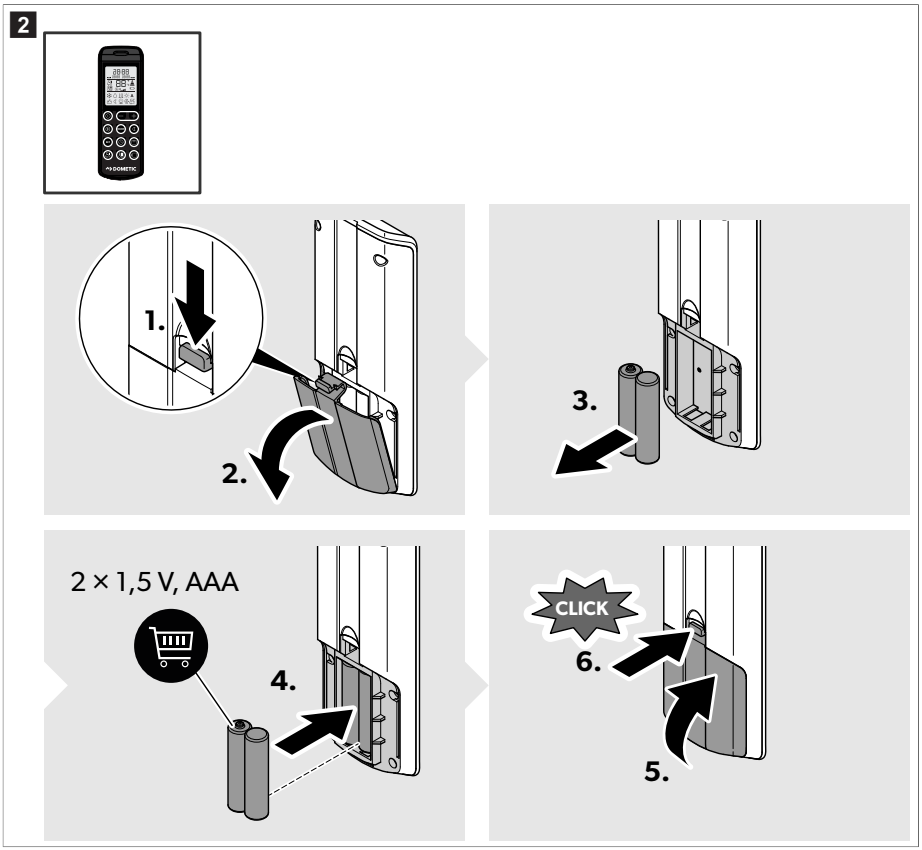

✓ The display shows all symbols for 5 s.

Protect the environment! Do not dispose of any batteries with general household waste. Return defective or used batteries to your retailer or dispose of them at collection points.

9.14 Regulating air supply within the vehicle

The air flow can be adjusted along the ceiling or towards the floor.

> Turn the slats in the air louvres independently in the required directions.

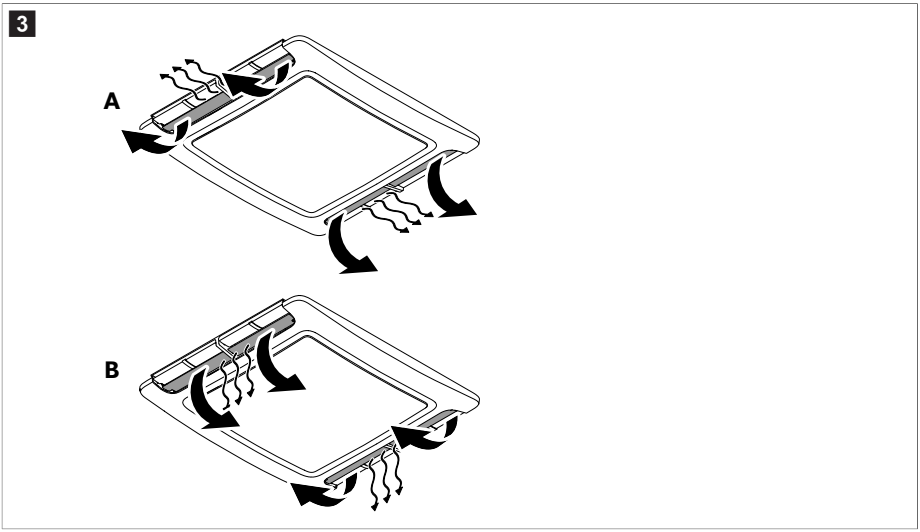

9.15 Using the Dometic Power App

The Dometic Power App can be used to control the roof air conditioner via the mobile phone or to update the software of the air conditioner.

NOTE Depending on the screen in the Dometic Power App a **<** button is displayed which allows to switch to the previously displayed screen.

Pairing the roof air conditioner and the Dometic Power App

NOTE Once the roof air conditioner is paired with the Dometic Power App, the pairing is always activated automatically as soon as the roof air conditioner, the Bluetooth of the mobile phone and the Dometic Power App are switched on again after being switched off.

1. Download the Dometic Power App.

   Scan the QR code or follow the link:qr.dometic.com/bdkpkV

2. Ensure the roof air conditioner is switched on (Switching the roof air conditioner on and to standby on page 9).
3. Activate Bluetooth on the mobile phone.

4. Open the Dometic Power App.
   - Settings for permissions appears.
5. Allow or deny the permissions by tapping the corresponding answers.
   - The welcome screen appears.
6. Click the **Add new device** button.
7. Select the roof air conditioner.
8. Press and hold the ⊙ button for 3 s.

NOTE Remove the center cover on the ADB to access the button.

- The ADB will beep 3 times to confirm it is in pairing mode. The ADB will then continue to beep intermittently for 60 s.
  The app will now search for your roof air conditioner.
  - When the pairing is successful, your roof air conditioner will appear in the app. The ADB will have a long beep before exiting pairing mode.
  - When the paring is unsuccessful within 60 s, the ADB will have two long beeps before exiting pairing mode.

9. Tap the **Next** button.
   - A confirmation appears that the air conditioner has been selected and connected.
10. Tap the **OK** button.
11. If available, enter the login data and tap the **Login** button.
12. If necessary, tap the **Sign up** button to create an account.
13. Fill in the fields.
14. Tap the **Sign up** button to sign up or tap the **Already have an account?** button to return to the **Log in** screen.

Updating the roof air conditioner software

1. Ensure that the roof air conditioner and the Dometic Power App are paired.
2. Ensure to be logged in to the Dometic Power App.
3. Tap the ☰ button in the Dometic Power App.
   - A selection of settings appears.
4. Tap **Devices** to display the paired devices.
5. Select the roof air conditioner.
   - Information about the roof air conditioner is displayed.
6. Tap **Check Updates** to check for software updates for the roof air conditioner.
   - The Dometic Power App show the current update, if applicable.
7. If availabe, tap **Download**.
   - The update download has been finished when **Update** is displayed.
8. Tap **Update**.
   - The update status is displayed in percent. When the update is completed in the Dometic Power App, the Dometic Power App automatically connects the mobile phone to the roof air conditioner via Wi-Fi and transmits the update to the roof air conditioner. The Dometic Power App indicates when the software has been updated and disconnects the Wi-Fi connection.

10 Cleaning and maintenance

10.1 Cleaning

NOTICE! Damage hazard

> Do not use means to accelerate the defrosting process or to clean, other than those recommended by the manufacturer.

> Do not clean the roof air conditioner with a high-pressure cleaner. Exposure to high-pressure water may damage the roof air conditioner.

> Do not use sharp or hard objects or cleaning agents for cleaning as these may damage the roof air conditioner.

> Do not use petrol, diesel, or solvents.

1. Regularly remove leaves and other dirt from the air intake and the ventilation grilles of the roof air conditioner. Do not damage the ventilation grilles in the process.

2. Occasionally clean the housings of the rooftop unit and the air distribution box with a damp cloth. Use only water with a gentle cleaning agent.
3. Occasionally clean the remote control with a slightly damp cloth. Clean the display with a cleaning cloth for glasses.

10.2 Maintenance

WARNING! Risk of injury

> Any other maintenance work in addition to the described subjects here may only be carried out by qualified personnel who are familiar with the risks involved when handling refrigerant and air conditioning systems as well as the relevant regulations.

Interval	Inspection/maintenance
Regularly	Check whether the condensation water drainage channels (**1**) at the sides of the roof air conditioner are clear and the condensation water is able to escape. 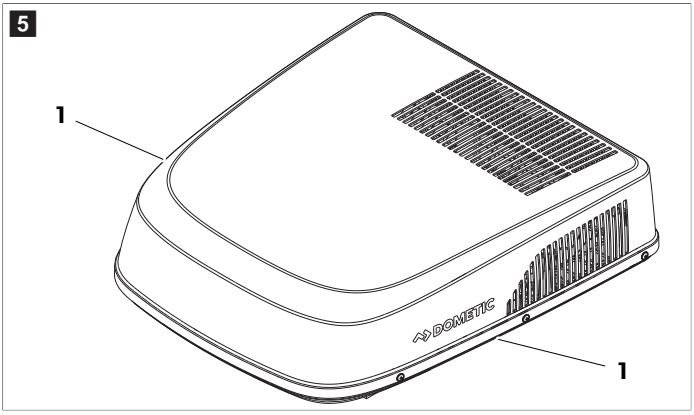
Regularly	Clean the filter of the air distribution box. 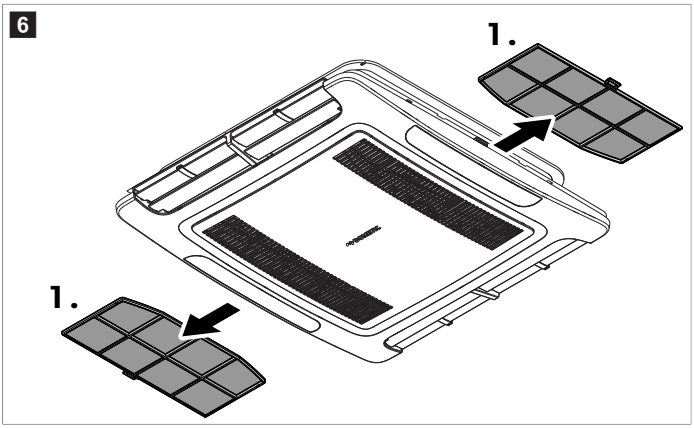 1. Insert a flat screwdriver into the handle to pull the filters slightly out. 2. Remove the filters by hand. 3. Clean the filters with a detergent solution and let them dry. 4. Slide the dry filters back.
Once per year	• Have the evaporator and condenser of the roof air conditioner cleaned by a professional. • Check the seals between the roof air conditioner and the vehicle roof for cracks and other damage. • Check whether the fastening bolts are tightened to the correct torque (2.5 N·m ± 0.3 N·m) and adjust if necessary.

11 Troubleshooting

Problem	Possible cause	Suggested remedy
Not cooling well	The roof air conditioner is not set to cooling.	Set the roof air conditioner to cooling.
	The ambient temperature is above 52°C.	The roof air conditioner is only designed for ambient temperatures of up to 52°C.
	The temperature set is higher than the room temperature.	Select a lower temperature.
	The ambient temperature is below 16°C.	The roof air conditioner is designed for cooling only at ambient temperatures above 16°C.
	One of the temperature sensors is defective.	Contact an authorized Dometic service agent.
	The evaporator fan is damaged.	Contact an authorized Dometic service agent.
	The condenser fan is damaged.	Contact an authorized Dometic service agent.
Not heating well	The roof air conditioner is not set to heating.	Set the roof air conditioner to heating.
	The ambient temperature is below – 2°C.	The roof air conditioner is designed for ambient temperatures above – 2°C.
	The temperature set is lower than the room temperature.	Select a higher temperature.
	One of the temperature sensors is defective.	Contact an authorized Dometic service agent.
	The evaporator fan is damaged.	Contact an authorized Dometic service agent.
Low air output	The air intake openings are blocked or obstructed.	Remove any leaves and other dirt from the ventilation grilles of the roof air conditioner.
	The fan is defective.	Contact an authorized Dometic service agent.
Water enters the vehicle.	The condensation water drainage openings are clogged up.	Clean the water drainage openings from condensation water.
	The seals are damaged.	Contact an authorized Dometic service agent.

Problem	Possible cause	Suggested remedy
The roof air conditioner does not switch on.	No power supply connected.	Check the power supply.
	The voltage is too low (< 200 V).	The power supply at the camping site is not sufficient.
	The voltage converter is defective.	Contact an authorized Dometic service agent.
	One of the temperature sensors is defective.	Contact an authorized Dometic service agent.
	The electrical fuse of the power supply is too low.	> The power supply at the camping site is overloaded. Check the power supply at the camping site. > If applicable, unwind the power cable drum. > Reduce the active electrical appliances in the vehicle. > The electrical protection at the camping site is not sufficient. Check electrical protection at the campsite with campsite operator.
The roof air conditioner does not switch off.	One of the temperature sensors is defective.	Contact an authorized Dometic service agent.
	The electrical fuse of the power supply is too low.	Contact an authorized Dometic service agent.
The roof air conditioner constantly switches itself off.	The icing sensor has tripped.	The outer temperature is too low or all air louvres are closed.
The display shows: P0	Over temperature or over current on IPM module	Contact an authorized Dometic service agent.
The display shows: P1	Under voltage protection	Check with the campsite management if the voltage at the campsite is sufficient.
The display shows: P2	Unit AC over-current protection	Contact an authorized Dometic service agent.
The display shows: P3	Overvoltage protection	Check with the campsite management if the voltage at the campsite is appropriate.
The display shows: P4	Discharge tube overheat protection	Contact an authorized Dometic service agent.
The display shows: P5	Evaporator coil protection (cooling mode)	Contact an authorized Dometic service agent.

Problem	Possible cause	Suggested remedy
The display shows: P6	Condenser coil protection (cooling mode)	Contact an authorized Dometic service agent.
The display shows: P7	Evaporator coil protection (heating mode)	Contact an authorized Dometic service agent.
The display shows: P9	Compressor drive abnormal or compressor does not start	Contact an authorized Dometic service agent.
The display shows: E0	Communication failure	Contact an authorized Dometic service agent.
The display shows: E1	Room temperature sensor fault	Contact an authorized Dometic service agent.
The display shows: E2	Evaporator coil temperature sensor fault	Contact an authorized Dometic service agent.
The display shows: E3	Condenser coil temperature sensor fault	Contact an authorized Dometic service agent.
The display shows: E7	Outdoor temperature sensor failure	Contact an authorized Dometic service agent.
The display shows: E8	Discharge tube temperature sensor failure	Contact an authorized Dometic service agent.
The display shows: E9	Compressor drive or IPM module fault	Check with the campsite management if the voltage at the campsite is sufficient. Contact an authorized Dometic service agent.
The display shows: EA	Current sensor fault	Contact an authorized Dometic service agent.
The display shows: EE	Outdoor EEPROM fault	Contact an authorized Dometic service agent.
The display shows: EL	LIN-BUS/CI-BUS communication failure	Contact an authorized Dometic service agent.

12 Disposal

Place the packaging material in the appropriate recycling waste bins, wherever possible. Consult a local recycling center or specialist dealer for details about how to dispose of the product in accordance with the applicable disposal regulations.

Protect the environment! Do not dispose of any batteries with general household waste. Return defective or used batteries to your retailer or dispose of them at collection points.

13 Warranty

If the product does not work as it should, please contact your retailer or the manufacturer's branch in your country (see dometic.com/dealer). The warranty applicable to your product is 3 year(s).

For repair and warranty processing, please include the following documents when you send in the device:

- A copy of the receipt with purchasing date
- A reason for the claim or description of the fault

Note that self-repair or nonprofessional repair can have safety consequences and might void the warranty.

Australia only

Our goods come with guarantees that cannot be excluded under the Australian Consumer Law. You are entitled to a replacement or refund for a major failure and for compensation for any other reasonably foreseeable loss or damage. You are also entitled to have the goods repaired or replaced if the goods fail to be of acceptable quality and the failure does not amount to a major failure. The benefits provided to you as the consumer by this warranty are in addition to other rights and remedies available to you under the law.

New Zealand only

This warranty policy is subject to the conditions and guarantees which are mandatory as implied by the Consumer Guarantees Act 1993(NZ).

14 Technical data

This product contains fluorinated greenhouse gases.

The cooling unit is hermetically sealed.

7 (Unit: mm)

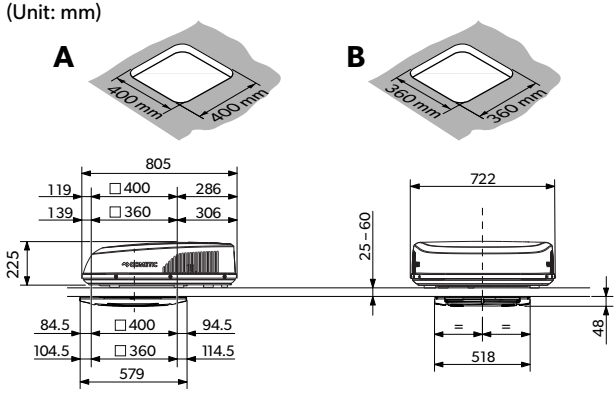

	ICX7435IHP
Cooling capacity	3000 W
Heating capacity	2200 W
AC input voltage	220 V … 240 V~ / 50 Hz … 60 Hz
Rated cooling current	< 6.8 A
Maximum cooling current	< 7.5 A
Rated heating current	< 5.1 A

	ICX7435IHP
Maximum heating current	< 7.5 A
Required fuse	10 A
Operating temperature range	– 2°C … 52°C
Refrigerant	R32
Refrigerant quantity	420 g
CO_2 equivalent	0.284 t
Global warming potential (GWP)	675
Protection class (rooftop unit)	IPX5
Dimensions	Fig. 7 on page 20
Net weight (rooftop unit + ADB)	< 35 kg
Inspection/certification	

DOMETIC

dometic.com

YOUR LOCAL DEALER	YOUR LOCAL SUPPORT	YOUR LOCAL SALES OFFICE
dometic.com/dealer	**dometic.com/contact**	**dometic.com/sales-offices**

A complete list of Dometic companies, which comprise the Dometic Group, can be found in the public filings of:
DOMETIC GROUP AB • Hemvärnsgatan 15 • SE-17154 Solna • Sweden

4445105234 4472010088 54-A2220-01-MAW40B01 2026-05-25