DOMETIC

AC AND VENTILATION
IBIS CORE 3000

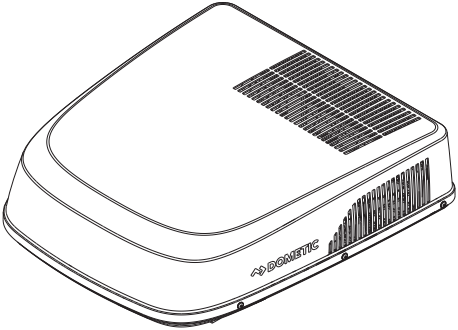

Dometic Ibis Core 3000

EN **Roof Air Conditioner**
Installation Manual.....3

Copyright

© 2026 Dometic Group. The visual appearance of the contents of this manual is protected by copyright and design law. The underlying technical design and the products contained herein may be protected by design, patent or pending patent. The trademarks mentioned in this manual belong to Dometic Sweden AB. All rights are reserved.

English

1 Important notes....3
2 Related documents....3
3 Explanation of symbols....3
4 Safety instructions....4
5 Explanations of symbols on the device....6
6 Scope of delivery....6
7 Accessories....7
8 Target groups....8
9 Intended use....8
10 Technical description....8
11 Installation....8
12 Wiring diagrams....24
13 Technical data....25

1 Important notes

Please read these instructions carefully and follow all instructions, guidelines, and warnings included in this product manual in order to ensure that you install, use, and maintain the product properly at all times. These instructions MUST stay with this product.

By using the product, you hereby confirm that you have read all instructions, guidelines, and warnings carefully and that you understand and agree to abide by the terms and conditions as set forth herein. You agree to use this product only for the intended purpose and application and in accordance with the instructions, guidelines, and warnings as set forth in this product manual as well as in accordance with all applicable laws and regulations. A failure to read and follow the instructions and warnings set forth herein may result in an injury to yourself and others, damage to your product or damage to other property in the vicinity. This product manual, including the instructions, guidelines, and warnings, and related documentation, may be subject to changes and updates. For up-to-date product information, please visit documents.dometic.com.

2 Related documents

Find the detailed operating manual at qr.dometic.com/bggWWk.

3 Explanation of symbols

A signal word will identify safety messages and property damage messages, and also will indicate the degree or level of hazard seriousness.

DANGER!

> Indicates a hazardous situation that, if not avoided, will result in death or serious injury.

WARNING!

> Indicates a hazardous situation that, if not avoided, could result in death or serious injury.

CAUTION!

> Indicates a hazardous situation that, if not avoided, could result in minor or moderate injury.

NOTICE!

> Indicates a situation that, if not avoided, could result in property damage.

NOTE Supplementary information for operating the product.

4 Safety instructions

General safety

WARNING! Failure to obey these warnings could result in death or serious injury.

> This appliance is not intended for use by persons (including children) with reduced physical, sensory or mental capabilities, or lack of experience and knowledge, unless they have been given supervision or instruction concerning use of the appliance by a person responsible for their safety.

> Children should be supervised to ensure that they do not play with the appliance.

> Cleaning shall not be performed by children without supervision.

> Do not pierce or burn the appliance.

> Do not make any alterations or conversions to the appliance.

> Do not damage the refrigerant circuit.

> If the supply cord is damaged, it must be replaced by the manufacturer, its service agent or similarly qualified personnel in order to avoid a hazard.

> Be aware that refrigerants may not contain an odor.

> Do **not** undo the upper cover of the appliance in the event of a fire. Use approved extinguishing agents. Do not use water to extinguish fires.

> In the case that the appliance contains an ionizer, consult your physician if you have a medical condition. The ionizer can produce ozone (O3) in small quantities. If you suffer from lung disease, asthma, heart disease, respiratory disease, respiratory problems, or have an ozone sensitivity, consult your physician to determine whether the use of this device is safe for you.

> Repair of the appliance may only be carried out by qualified personnel who are familiar with the risks involved and the relevant regulations. Inadequate repairs may cause serious hazards.For repair service, contact the service center in your country (see dometic.com/dealer).

> Servicing shall only be performed as recommended by the manufacturer.

> Maintenance shall only be performed as recommended by the equipment manufacturer. Maintenance and repair requiring the assistance of other qualified personnel shall be carried out under the supervision of the person competent in the use of flammable refrigerants.

> Always disconnect the power supply when working on the appliance.

> Never drive through automatic car washes when the appliance is mounted.

NOTICE! Damage hazard

> The appliance shall be stored so as to prevent mechanical damage from occurring.

> The appliance shall be stored in a room without continuously operating open flames (for example an operating gas appliance) and ignition sources (for example an operating electric heater).

> The appliance shall be stored horizontally at a dry, ventilated and covered location.

Safety when installing

WARNING! Failure to obey these warnings could result in death or serious injury.

> The appliance shall be installed in accordance with national electrical and mechanical installation regulations.

> Ensure that the working area is in the open or that it is adequately ventilated before breaking into the system or conducting any hot work. A degree of ventilation shall continue during the period that the work is carried out. The ventilation should safely disperse any released refrigerant and preferably expel it externally into the atmosphere.

> Under no circumstances shall potential source of ignition be used in the searching for or detection of refrigerant leaks. A halide torch or any other detector using naked flame shall not be used. Electronic leak detector or leak detection fluids (eg. Bubble method, fluorescent method agents) can be used to detect refrigerant leaks. If a leak is suspected, all naked flames shall be removed/extinguished. If a leakage of refrigerant is found which requires brazing, all of the refrigerant shall be recovered from the system or isolated in a part of the system remote from the leak.

> The roof air conditioner shall be installed in a vehicle with a floor area larger than 4 m^2.

> Ensure that there are no objects within the vehicle which could obstruct the attachment of the air distribution box or the cooled air from flowing through the swiveling air distribution nozzles.

CAUTION! Failure to obey these cautions could result in minor or moderate injury.

> Only operate the appliance if you are certain that the housing and the cables are not damaged.

> Do not use the appliance near flammable fluids or in closed rooms.

> Ensure that no combustible objects are stored or installed near the air outlet. A distance of at least 50 cm must be kept.

> Do not reach into air outlets or insert any foreign objects in the appliance.

> Always wear protective goggles and gloves.

NOTICE! Damage hazard

> Select a flat and sufficiently level area at the center of the vehicle roof between two longitudinal sections for installation.

> The roof inclination of the installation surface may not exceed 10 °.

> Before installation, check whether any vehicle components could be damaged by the installation of the appliance (such as lamps, cupboards, doors). The vehicle manufacturer may have already provided points where the opening for the installation of the appliance can be made without any risk of weakening the construction or cutting power cables.

> Before installation, consult the vehicle manufacturer whether the construction is designed for the static weight and the loads of the roof air conditioner when the vehicle is in motion.

> Ask the vehicle manufacturer if the height entered in your vehicle documents needs to be altered due to the installation of the roof air conditioner.

> If faults occur in the refrigerant circuit, the system must be checked by a specialist company and repaired properly.

> The refrigerant must not be released into the air.

> When breaking into the refrigerant circuit to make repairs or for any other purpose eg. Remove refrigerant or open the circuit by cutting or brazing, follow the working procedure as indicated in service manual.

> If charging refrigerant is needed, follow the charging procedure as indicated in service manual.

> When removing the refrigerant from system, follow the recovery procedure as indicated in service manual.

> Any person who is involved with working on or breaking into a refrigerant circuit should hold a current valid certificate from an industry-accredited assessment authority, which authorizes their competence to handle refrigerants safely in accordance with an industry recognized assessment specification.

5 Explanations of symbols on the device

Warning! Low burning velocity material.

USA/Canada only. Warning! Risk of fire / Flammable materials

Read operating manual.

Read service manual.

6 Scope of delivery

The roof air conditioner consists of the rooftop unit and the air distribution box (ADB).

Rooftop unit

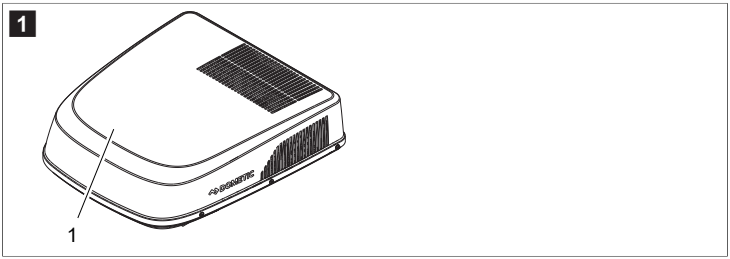

No. in Fig. 1 on page 6	Quantity	Description
1	1	Rooftop unit

ADB

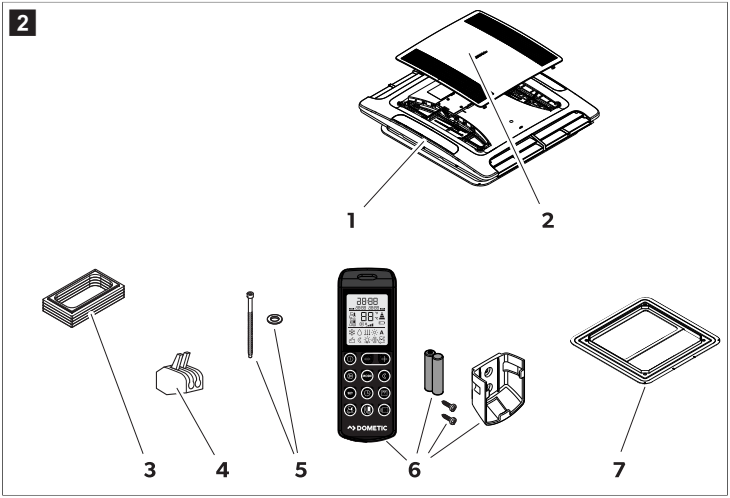

No. in Fig. 2 on page 7	Quantity	Description
1	1	ADB
2	1	ADB center cover
3	4	Duct section
4	4	Cable connector
5	4	Fastening bolt
6	1	Remote control
	2	Batteries
	2	Fastening screws for the mounting bracket
	1	Mounting bracket for the remote control
7	1	Roof frame

7 Accessories

Available as accessories (not included in the scope of delivery):

Description	Ref. No.
Extension duct kit (including 4 duct sections; for 60 … 100 mm roof thicknesses)	4450035514

Description	Ref. No.
Bolt kit M6 x 160 mm (for 60 … 100 mm roof thicknesses)	4450035513
ADB filter	4450036682

8 Target groups

The mechanical installation must be executed by a qualified person who is familiar with the construction and operation of the equipment and the hazards involved.

The electrical installation and setup of the device must be performed by qualified personnel who has demonstrated skill and knowledge related to the construction and operation of electrical equipment and installations, and who is familiar with the applicable regulations of the country in which the equipment is to be installed and/or used, and has received safety training to identify and avoid the hazards involved.
All other actions are intended also for non-professional users.

9 Intended use

The roof air conditioner is intended to be used for installation on the roof of a caravan or recreational vehicle to provide cooling and heating.

The roof air conditioner is **not** suitable for trains, houses, and apartments. The roof air conditioner is **not** suitable for installation in construction machines, agricultural machines, or similar equipment.

This product is only suitable for the intended purpose and application in accordance with these instructions.

This manual provides information that is necessary for proper installation and/or operation of the product. Poor installation and/or improper operation or maintenance will result in unsatisfactory performance and a possible failure.

The manufacturer accepts no liability for any injury or damage to the product resulting from:

- Incorrect installation, assembly or connection, including excess voltage
- Incorrect maintenance or use of spare parts other than original spare parts provided by the manufacturer
- Alterations to the product without express permission from the manufacturer
- Use for purposes other than those described in this manual

Dometic reserves the right to change product appearance and product specifications.

10 Technical description

The roof air conditioner is intended for vehicles with the following roof thicknesses:

- 25 mm … 60 mm for a roof cutout of 400 mm × 400 mm
- 32 mm … 60 mm for a roof cutout of 360 mm × 360 mm

The roof air conditioner will operate at ambient temperatures between – 2°C … 52°C. The roof air conditioner is designed to be installed within ± 10 ° of the horizontal plane.

11 Installation

DANGER! Electrocution hazard

> The electrical power supply in the RV must be connected by a qualified electrician who has demonstrated skill and knowledge related to the construction and operation of electrical equipment and installations and has received safety training to identify and avoid the hazards involved.

> Disconnect all power supplies including inverters when working on the roof air conditioner.
> Ensure that the appliance power supply cannot be reconnected during installation or maintenance.

WARNING! Electrocution hazard

> The appliance shall be installed in accordance with national wiring regulations.
> If the appliance replaces a window or hatch with a safety relevant forced venting function, an additional safety venting device (e.g. a mushroom fan or similar) needs to be added. In doubt consult the vehicle manufacturer.
> After the installation of the roof air conditioner, ensure a minimum clearance of 300 mm from the roof exhaust flue terminal, in accordance with AS/NZS 5601.1:2022.

CAUTION! Beware of injury

> Improper installation of the roof air conditioner can result in irreparable damage to the appliance and put the safety of the user at risk.
> Always have someone to help you when carrying or lifting the roof air conditioner.
> Before installation, check the location of existing wiring harnesses, wires, and other components within the installation area, in particular those which are not visible when installing the appliance (when drilling or screwing etc.).
> Attach and lay the cables so that they cannot be tripped over or damaged.
> Always wear the protective goggles and gloves.

NOTICE! Damage hazard

> The appliance is a sealed system with a closed refrigerant circuit. Do not open or manipulate, unless you are an appropriately qualified technician.
> Use cable ducts to lay cables through walls with sharp edges.
> Do not lay loose or bent cables next to electrically conductive materials (metal).
> Do not pull on the cables.
> Check that cabling will not be subject to wear, corrosion, excessive pressure, vibration, sharp edges or any other adverse environmental effects. The check shall also take into account the effects of aging or continual vibration from sources such as compressors or fans.
> Observe the structural strength of the roof of the vehicle. The roof of the vehicle must be able to bear the weight of the roof air conditioner without being indented or deformed. In doubt consult the vehicle manufacturer.

11.1 Determining your cooling needs

This roof air conditioner is designed to be installed on the roof of a RV. When determining cooling needs, consider the following factors:

- The size of the RV.
- The RV window area (which could increase heat gain).
- The amount of insulation in the walls and the roof.
- The geographical location where the RV will be used.
- The personal comfort level required.

11.2 Installation location

Standard Location

The roof air conditioner is mounted on the existing roof vents.

Other locations

When there is no existing cutout or you want to install the AC in another location, the following locations are recommended:

- **One rooftop unit:** mount the rooftop unit slightly forward of the RV's center (front to back) and centered from side to side. (**A** in Fig. 3 on page 10)
- **Two rooftop units:** measuring from the front of the RV and centering from side to side, mount the first rooftop unit at 1/3 the length (**L**) of the RV and the second rooftop unit at 2/3 the length of the RV. (**B** in Fig. 3 on page 10)

NOTICE! Device damage

> Make sure that the power supply (from both mains and RV sources) can support the operation of two roof air conditioners simultaneously where required.

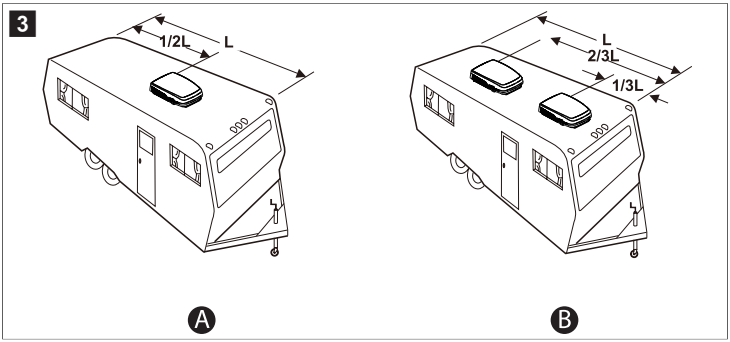

NOTE Install the rooftop unit on a flat and level roof section (a left-right tilt less than 10 ° is acceptable). Make all measurements while the RV is parked on a level surface.

11.3 Inspection before the installation

- Verify that the area around the installation location is clear of obstacles and that the distance allows for adequate ventilation on the roof.
- Ensure the roof of the RV is designed to support a dynamic load of all items on the roof.
- Check inside the vehicle to see if there are any obstructions (such as door openings, compartment racks, curtains, roof clamps, etc.) that would interfere with the installation and airflow of the air distribution box.

Object height < 60 mm	**Object height > 60 mm**			
All 4 sides	**Right**	**Left**[1)]	**Rear**[1)]	**Front**
50 mm	150 mm	150 mm	150 mm	150 mm

[1)] In this context "left" and "rear" means that you are looking at the unit from the front of the vehicle.

11.4 Preparing the RV roof opening

WARNING! Fire or electrical shock hazard

> Shut off the gas supply, disconnect the power from the RV, turn off or disconnect the inverter, and disconnect the terminal from the house battery before drilling or cutting into the RV.

> Make sure there are no obstacles such as wires or pipes inside the RV's roof.

> Provide grounding in compliance with all applicable electrical codes.

CAUTION! Device damage

> Maintain the structural integrity of the RV roof and never create a low spot on the RV roof.

> Otherwise the accumulated water may leak into the interior and damage the roof air conditioner and the vehicle.

11.4.1 Using an existing roof vent opening

NOTE If the roof does not have an existing cutout, skip to Making a new roof opening on page 12.

1. Remove all screws and fixtures of the existing roof hatch or air conditioner.

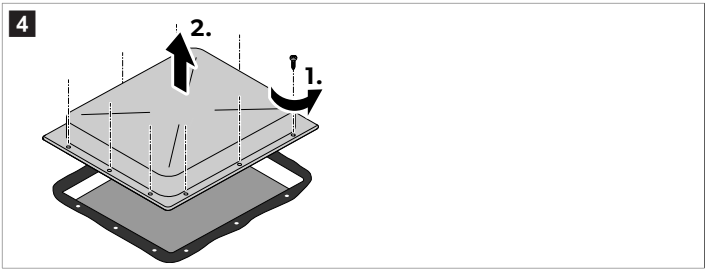

2. Take out the roof hatch or roof air conditioner.
3. Remove the sealant around the opening using a scraper or similar tool.

NOTE To ensure a proper seal for the rooftop unit, the 30 mm surface surrounding the cutout must be smooth, level, and free of debris.

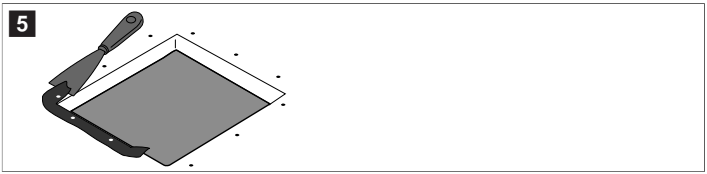

4. Measure the roof opening size.

- For roof opening **400 mm × 400 mm**:
  - If the opening exceeds 405 mm × 405 mm, reduce the size of the opening to the correct specification.
  - If the opening is less than 380 mm × 380 mm, enlarge the opening to the correct specification.
- For roof opening **360 mm × 360 mm**:
  - If the opening exceeds 365 mm × 365 mm, reduce the size of the opening to the correct specification.
  - If the opening is less than 359 mm × 359 mm, enlarge the opening to the correct specification.

11.4.2 Making a new roof opening

NOTE If the roof have an existing roof vent, see Using an existing roof vent opening on page 11.

DANGER! Fire or electrical shock hazard

> The power must be turned off before any operation since there may be electrical wiring inside the roof of the vehicle.

1. Select an area at the center on the roof between two longitudinal supports.

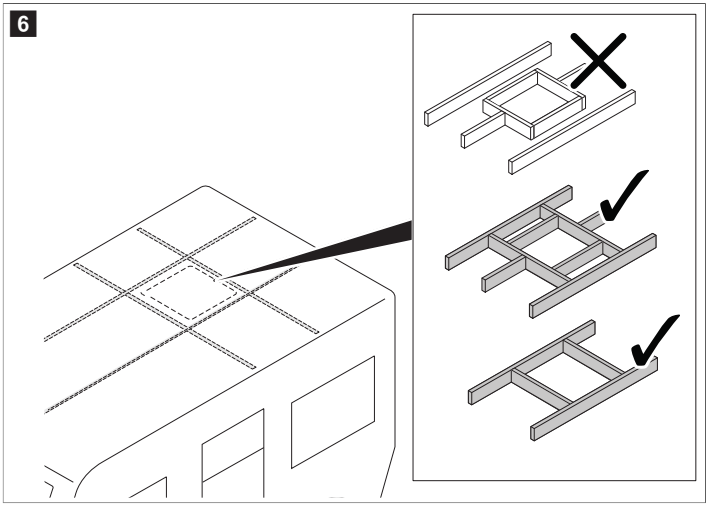

2. Mark the position and size of the opening.

NOTE To ensure a proper seal for the rooftop unit, the 30 mm surface surrounding the cutout must be smooth, level, and free of debris.

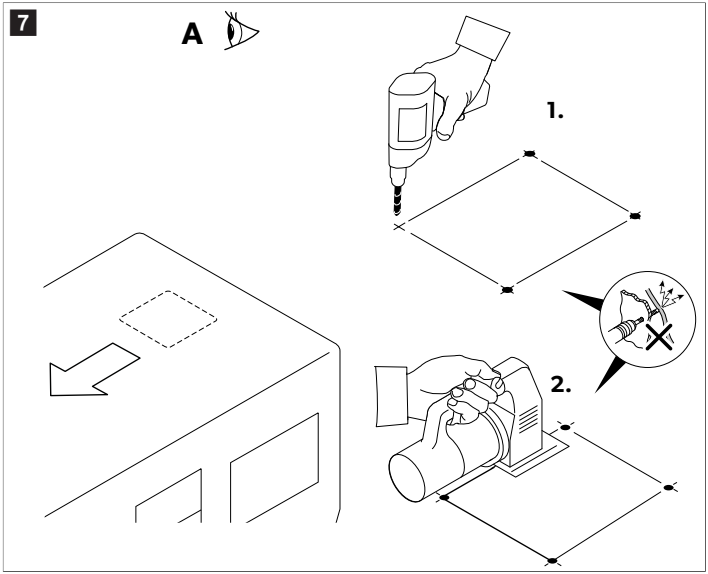

3. Drill out the corners (**A** in Fig. 8 on page 13).

NOTICE! Damage hazard

> Ensure that no electrical power cables are damaged. Check where the electrical cables are located.

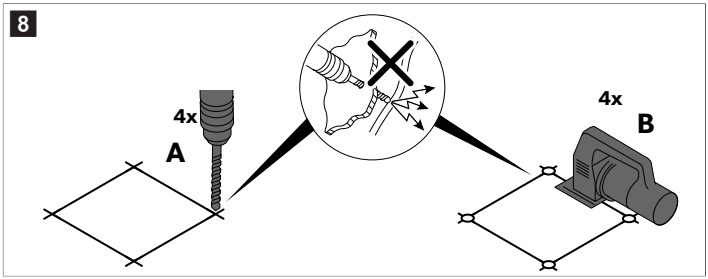

4. Carefully cut out the opening on the roof using a keyhole saw or a similar tool (**B** in Fig. 8 on page 13).
5. Check whether the roof cutout needs reinforcing.
6. If needed, remove the foam according to the width of your reinforcing rails (not in scope of delivery) (**A** in Fig. 9 on page 14).

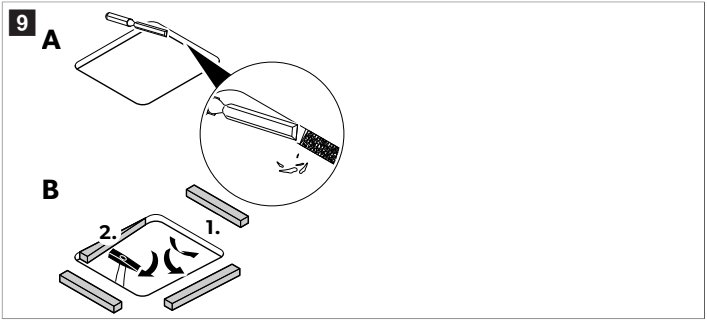

7. Fit the reinforcing rails (**B** in Fig. 9 on page 14).
8. At the front of the frame opening, leave or create an access hole to allow for the length of exposed AC voltage power supply wiring required to complete the installation.

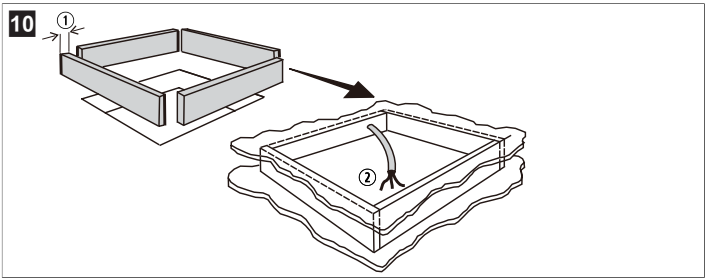

① 19 mm minimum width for the frame stock

② 380 mm exposed length of 220 V … 240 V~ power supply wiring

9. Cut a matching hole in the ceiling of the RV interior using the roof opening as a guide.

11.5 Preparing the RV roof opening

WARNING! Fire or electrical shock hazard

> Shut off the gas supply, disconnect the power from the RV, and disconnect the terminal from the supply battery before drilling or cutting into the RV.
> Make sure there are no obstacles such as wires or pipes inside the RV's roof.
> Provide grounding in compliance with all applicable electrical codes.

CAUTION! Device damage

> Maintain the structural integrity of the RV roof and never create a low spot on the RV roof.
> Otherwise the accumulated water may leak into the interior and damage the roof air conditioner and the vehicle.

11.6 Laying the connection cables

1. Ensure that the voltage specification on the roof air conditioner's rating label matches the voltage of the vehicle's power supply. The roof air conditioner must be connected to an electrical circuit which is able to supply the required current (Technical data on page 25).
2. Install an all-pole disconnect switch on the installation side. The switch must provide a contact gap of at least 3 mm to ensure safe disconnection.
3. Ensure the cable thickness complies with the maximum current rating specified on the product's rating label.
4. Make an opening on one side in order to feed through the power supply cable.

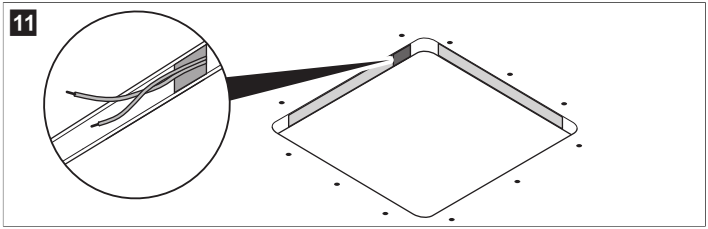

5. Feed the power supply cable through the opening into the vehicle interior.

11.7 Installing the rooftop unit

NOTICE! Device damage

> Do not drag or slide the rooftop unit along any surfaces. Doing so may damage the foam gasket on the bottom of the rooftop unit, which can lead to water leaks.

CAUTION! Lifting hazard

> Use proper lifting technique and control when lifting the rooftop unit.
> Two people are required to lift the rooftop component to the roof.

1. Apply a translucent roof-and-gutter silicone sealant around the underside of the roof frame. Observe the sealant manufacturer's instructions.

NOTE
No sealant is required on the upper section of the roof frame. This allows for easier service of the rooftop unit.

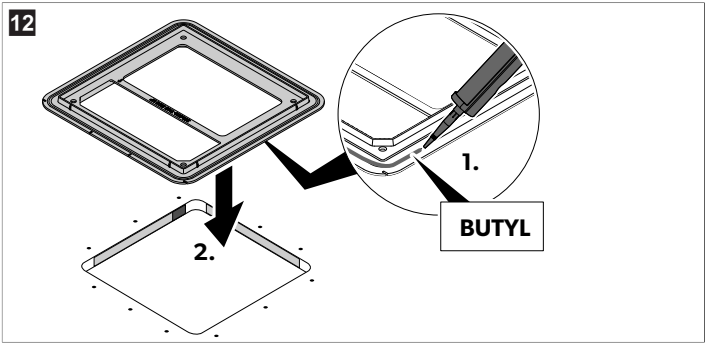

2. Orientate the roof frame based on opening size.
3. Fit the roof frame into the roof opening.

NOTE Ensure the roof frame is correctly oriented before installation. Refer to the markings on the frame to determine the correct side: one side is labeled for the 360 mm × 360 mm roof opening, and the other for the 400 mm × 400 mm roof opening. Flip the frame if necessary.

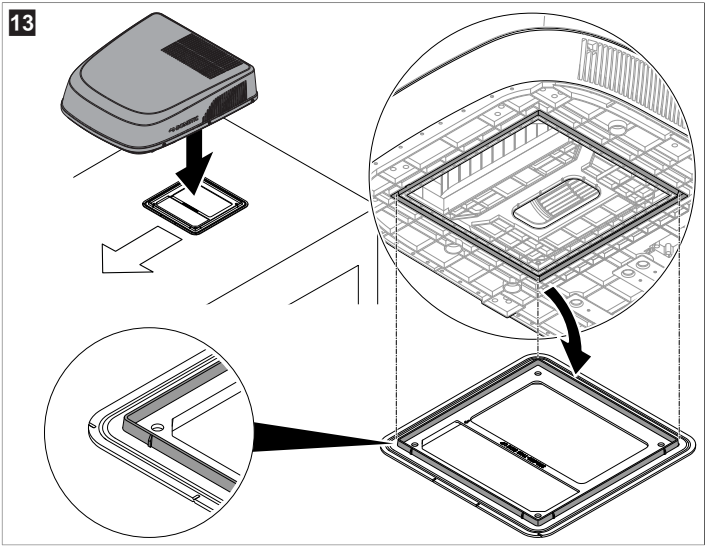

4. Lift the rooftop unit onto the roof of the vehicle. Observe the direction of travel.
5. Position the rooftop unit into the roof frame and align into the roof frame's groove. To align into the roof frame's groove, use the corners at the front of the roof frame.

NOTE The outside work is complete. Minor adjustments can be made from inside the RV if required.

11.8 Preparing to work inside the RV

1. Carry the ADB kit into the RV.

NOTE The ADB box contains all the required mounting hardware for interior installation.

2. Reach up into the return air opening of the rooftop unit and pull down the rooftop unit's electrical wiring harnesses for later connection.

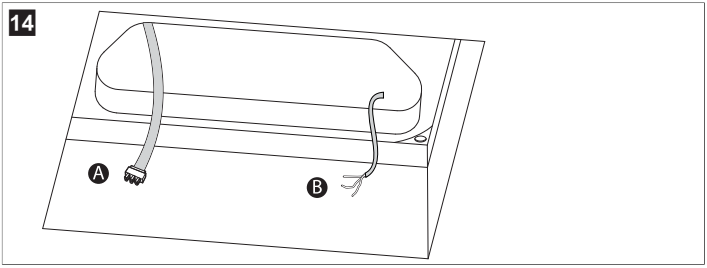

A Cable for connecting the electronic control panel

B Cable for connecting a 220 V … 240 V~ power

3. Remove the ADB and the mounting hardware from the carton.

11.9 Installing the ADB

Removing the center cover and filters

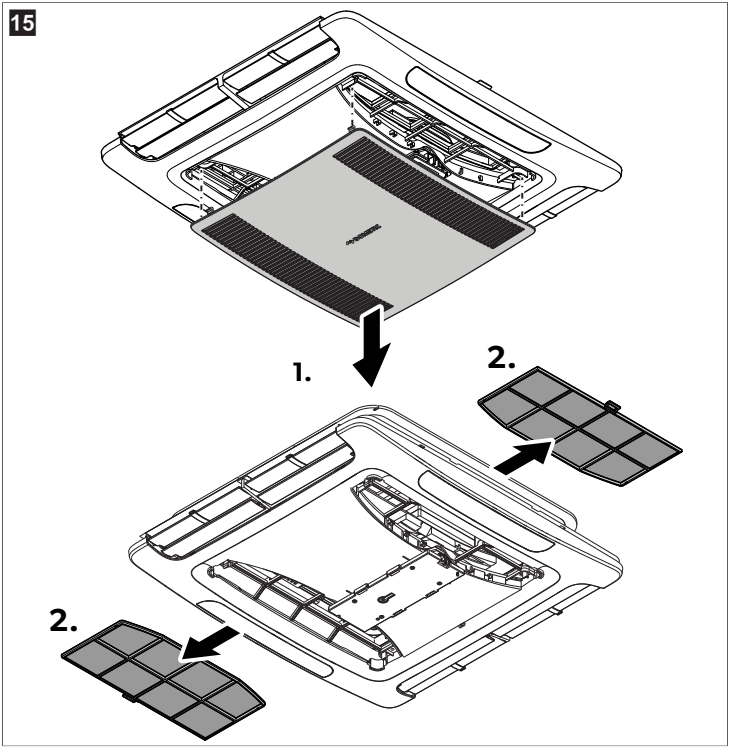

1. Remove the center cover on the air distribution box.
2. Slide out the filters.

Wiring the ADB

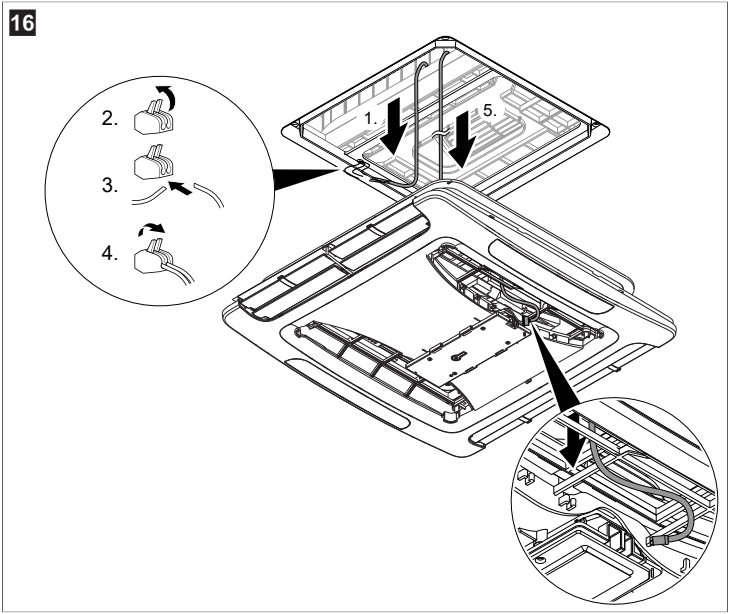

1. **Connect the power supply cable (1 in Fig. 16 on page 20)**
   a) Connect the stripped cables (**a**) to a cable connector (**b**).
   b) Connect the roof air conditioner with the power supply.
   c) Connect the grounding cable to the vehicle's grounding system.
2. **Connect the communication cable (2 in Fig. 16 on page 20).**
   a) Feed the communication cable through the gap and locate the wire in the opening.
   b) Connect the communication 4-pin plug into the socket on the side of the control board in the ADB. Ensure that the cable is located into the small opening away from the filter area.
   c) Secure excess cable into the holders.

Installing the duct sections

1. Stack the duct sections and place against the roof thickness: Ensure that the duct height matches the roof height or use the table as guide.

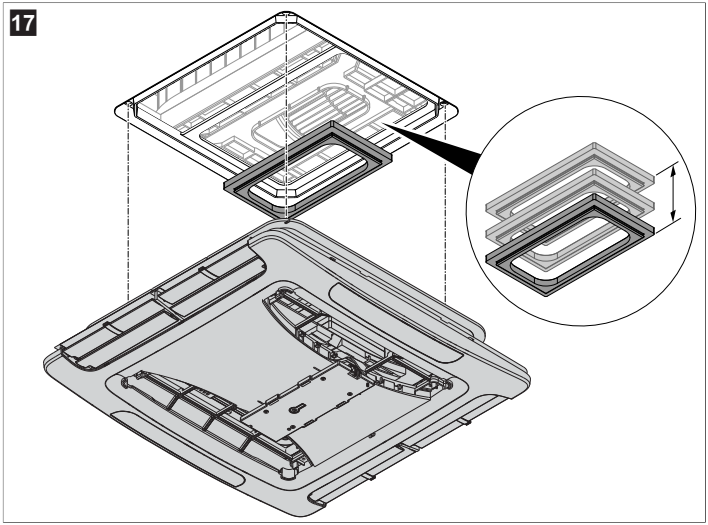

Roof thickness	Number of duct sections
25 … 35 mm	1
35 … 45 mm	2
45 … 55 mm	3
55 … 60 mm	4

NOTE Additional duct sections can be purchased for thicker roofs.

2. Attach the required number of duct sections on the ADB.

Securing the ADB

> Fasten the ADB to the ceiling through the rooftop unit with the 4 bolts supplied. Tighten the screws using a torque spanner and a fastening torque of 2.5 N·m ± 0.3 N·m.

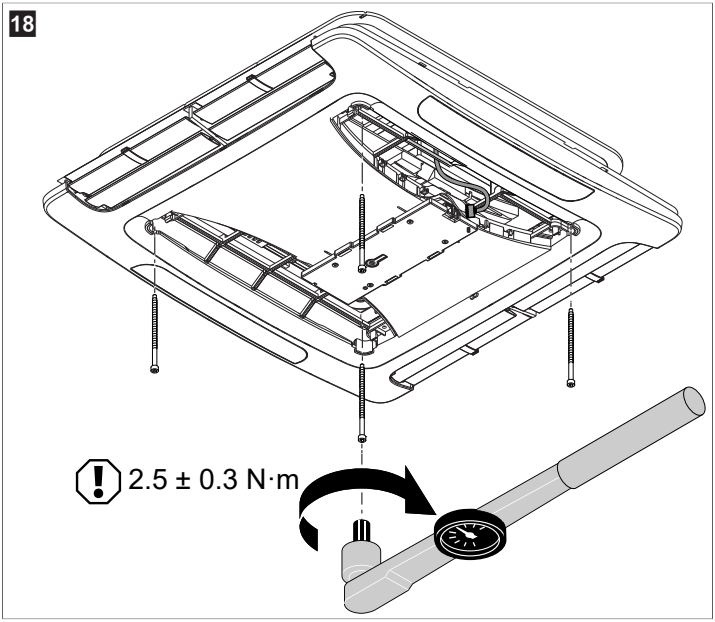

Installing the center cover and filters

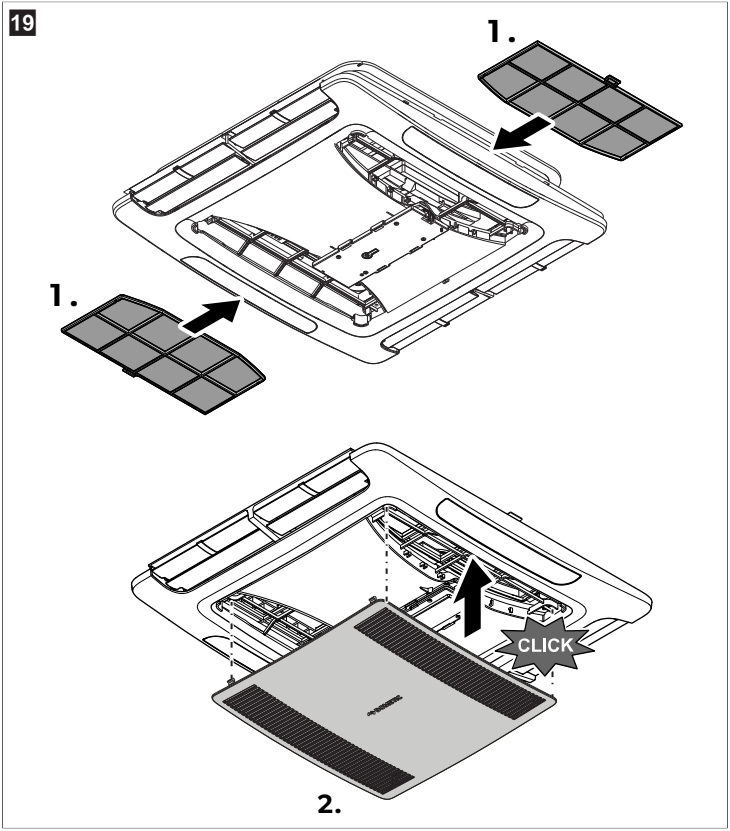

1. Reinsert the filters.
2. Clip the center cover into the ADB.

11.10 Inspection after installation

> Consult the vehicle manufacturer to determine whether a technical inspection is required after installing the roof air conditioner and whether the vehicle height listed in the official documents must be updated.

- Increased height: 225 mm

✓ The installation is now complete.

Connect the unit to the power supply and verify that the roof air conditioner operates correctly.

12 Wiring diagrams

Rooftop unit

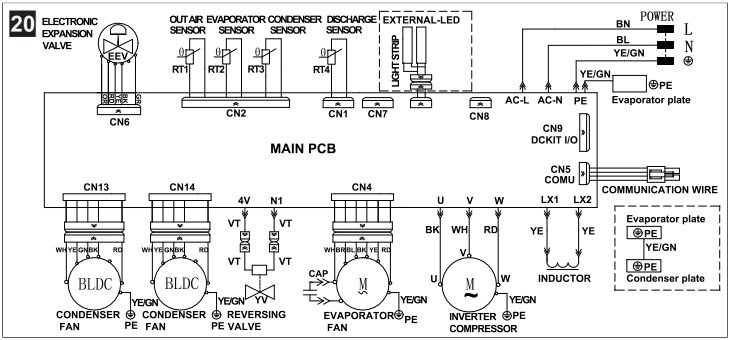

ADB

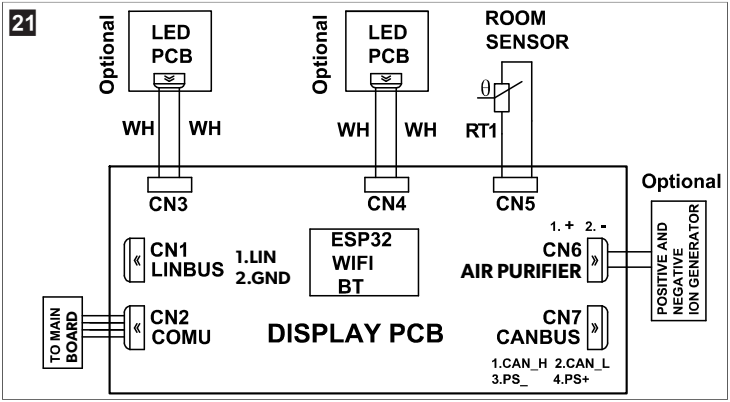

13 Technical data

This product contains fluorinated greenhouse gases.

The cooling unit is hermetically sealed.

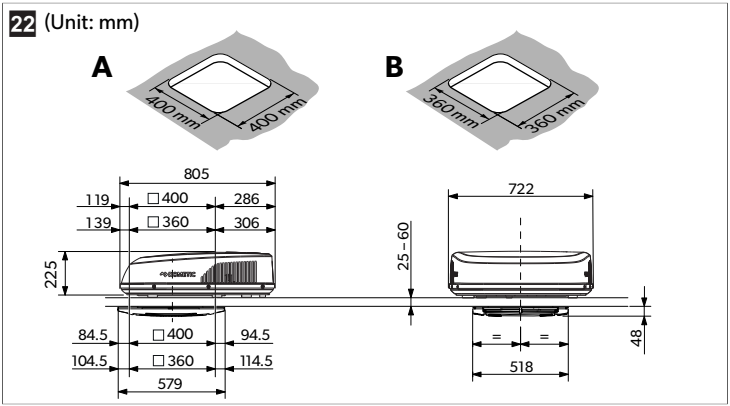

	ICX7435IHP
Cooling capacity	3000 W

	ICX7435IHP
Heating capacity	2200 W
AC input voltage	220 V … 240 V~ / 50 Hz … 60 Hz
Rated cooling current	< 6.8 A
Maximum cooling current	< 7.5 A
Rated heating current	< 5.1 A
Maximum heating current	< 7.5 A
Required fuse	10 A
Operating temperature range	–2°C … 52°C
Refrigerant	R32
Refrigerant quantity	420 g
CO_2 equivalent	0.284 t
Global warming potential (GWP)	675
Protection class (rooftop unit)	IPX5
Dimensions	Fig. 22 on page 25
Net weight (rooftop unit + ADB)	< 35 kg
Inspection/certification	

DOMETIC

4445105233 4472010087 54-A2220-01-MAW40A01 2026-05-25

dometic.com

YOUR LOCAL DEALER

dometic.com/dealer

YOUR LOCAL SUPPORT

dometic.com/contact

YOUR LOCAL SALES OFFICE

dometic.com/sales-offices

A complete list of Dometic companies, which comprise the Dometic Group, can be found in the public filings of:
DOMETIC GROUP AB • Hemvärnsgatan 15 • SE-17154 Solna • Sweden