DOMETIC

HOT AND COOKING

COOKTOPS AND COMBINATIONS

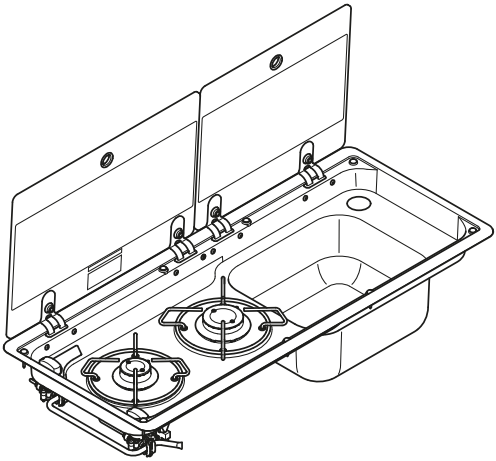

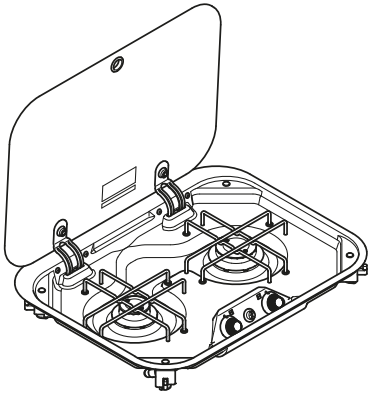

MO9722R, PI8022

EN **Cooktops and combinations**
Installation and Operating Manual..... 15

Copyright

© 2025 Dometic Group. The visual appearance of the contents of this manual is protected by copyright and design law. The underlying technical design and the products contained herein may be protected by design, patent or pending patent. The trademarks mentioned in this manual belong to Dometic Sweden AB. All rights are reserved.

1

WARNING

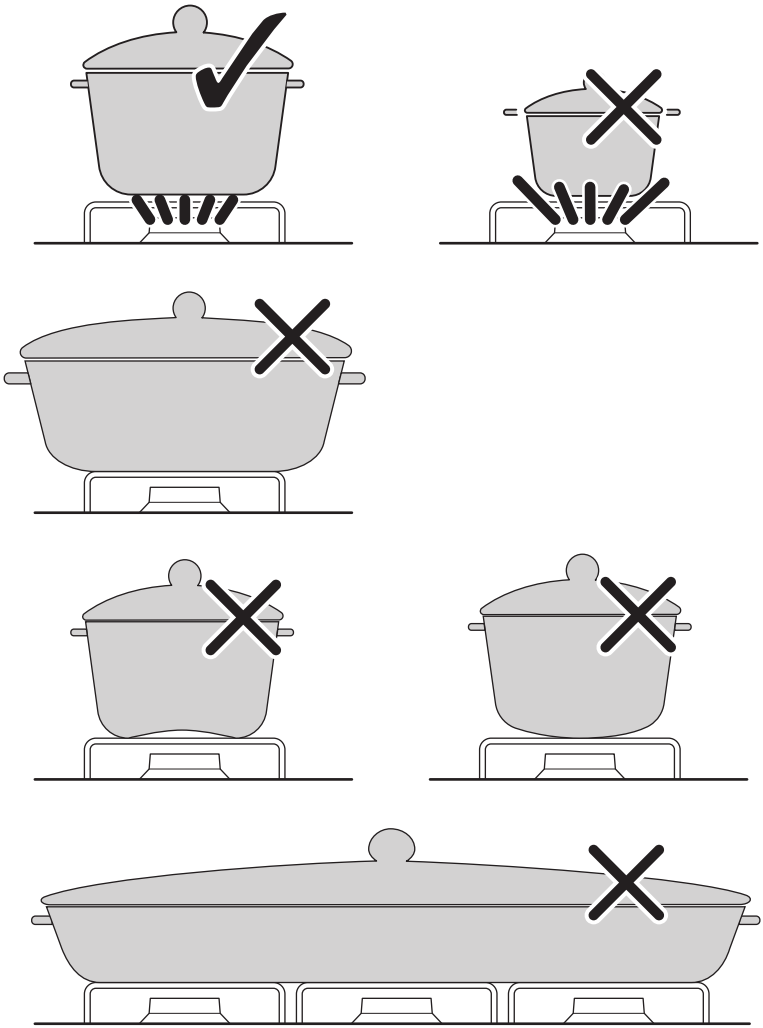

2

PI8022
Piezo

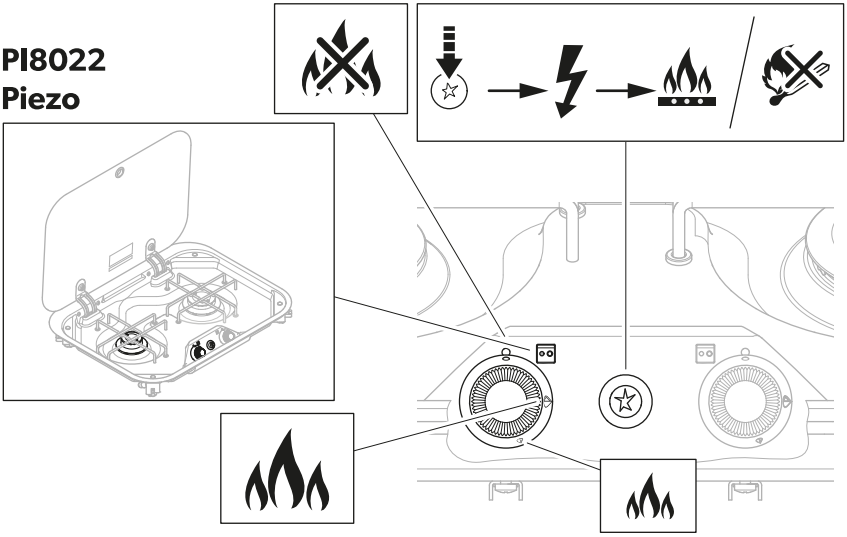

MO9722R

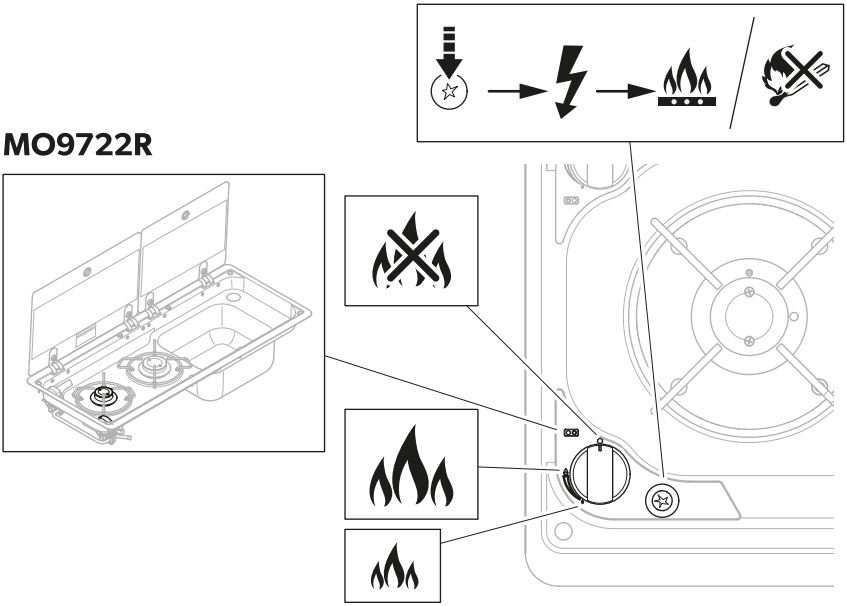

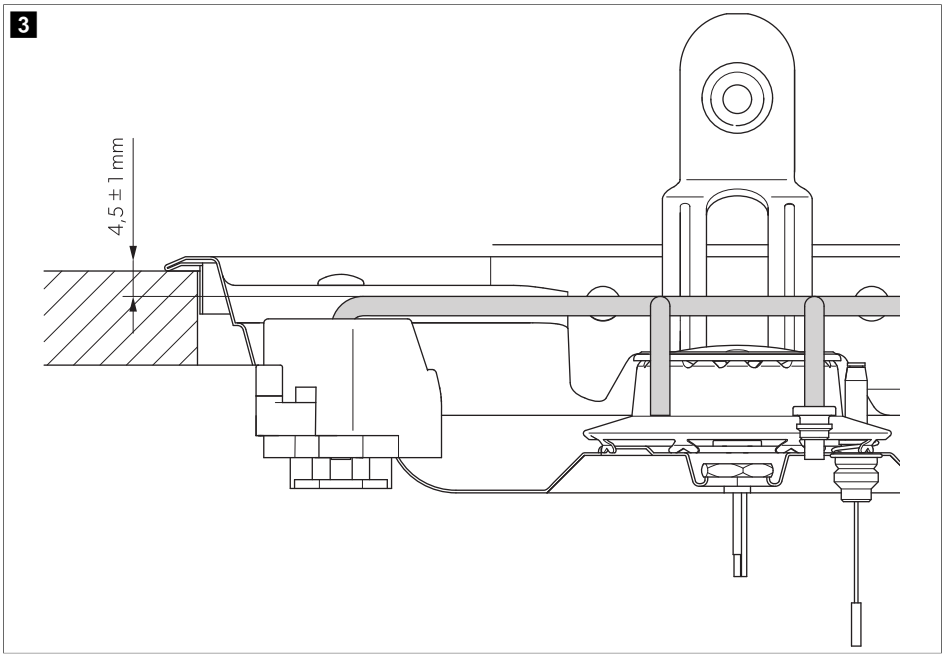
3
4,5 ± 1 mm

4

PI8022

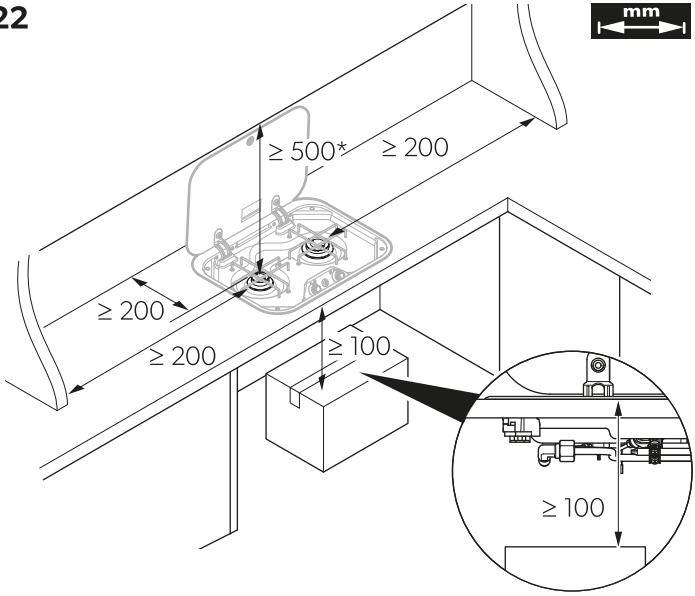

MO9722R

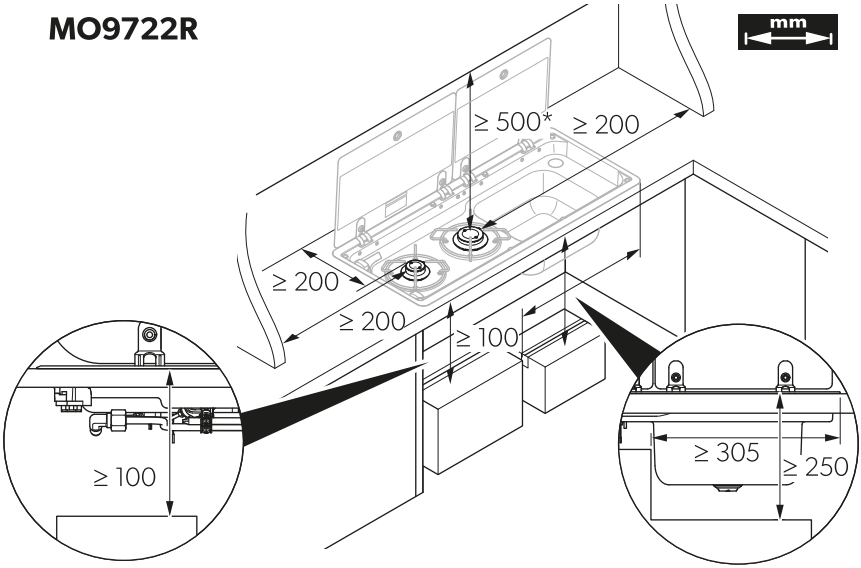

5 MO9722R

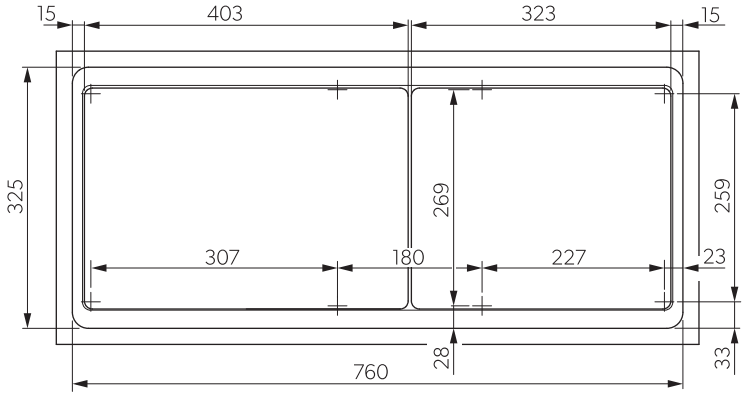

PI8022

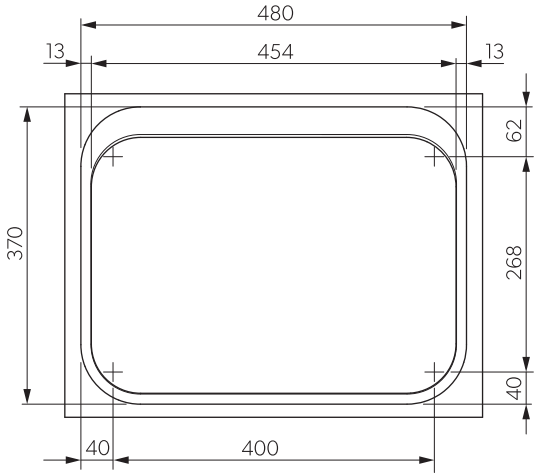

6 MO9722R

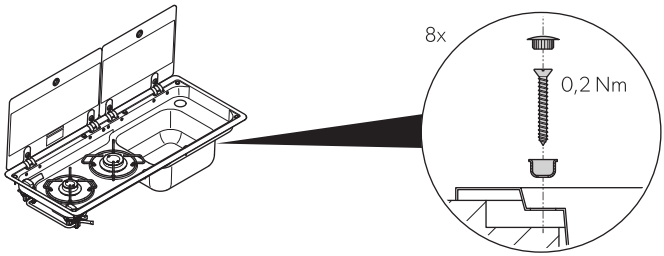

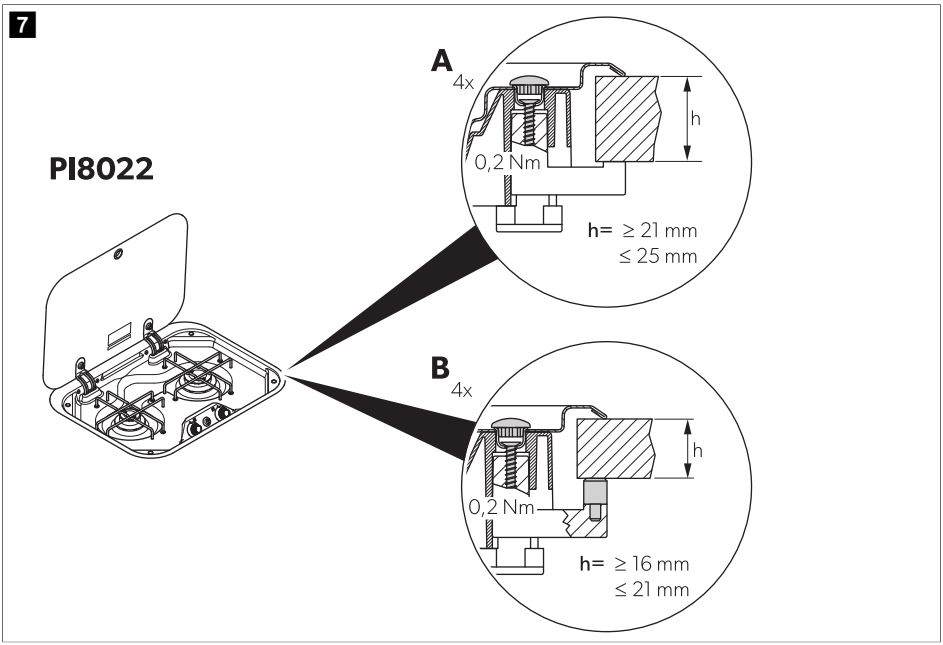
7
PI8022
A
4x
h
0,2 Nm
h= ≥ 21 mm
≤ 25 mm
B
4x
h
0,2 Nm
h= ≥ 16 mm
≤ 21 mm

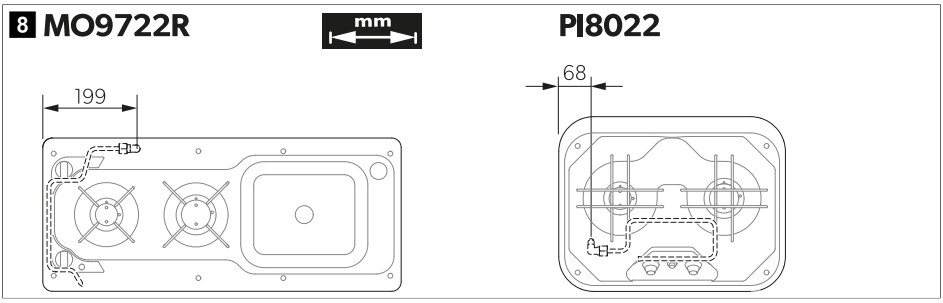
8 MO9722R
mm
PI8022
199
68

9

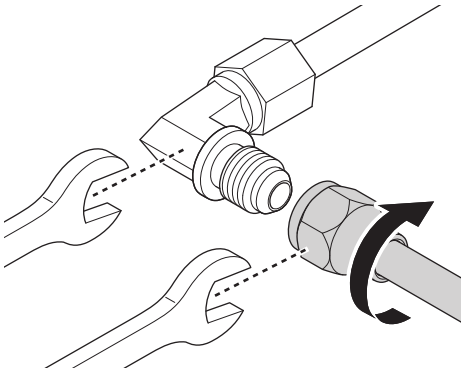

10

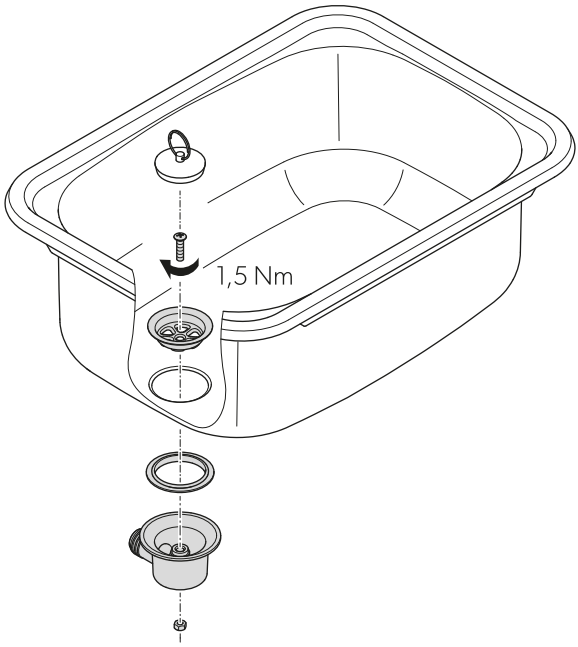

11

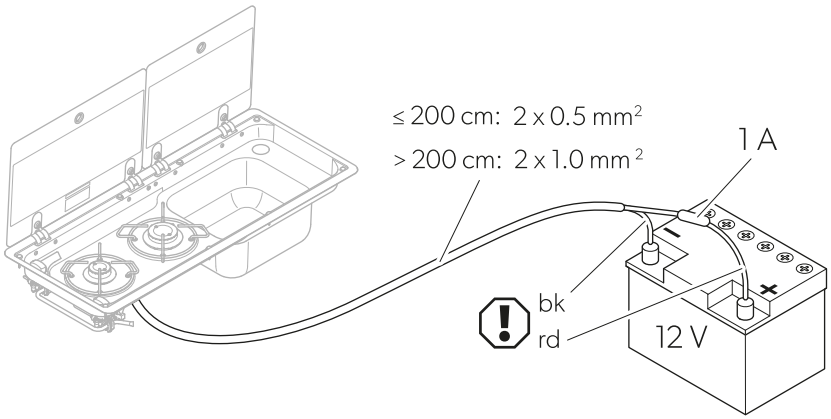

12 PI8022

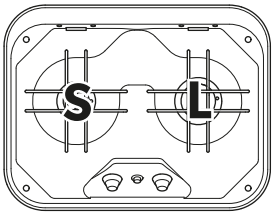

MO9722R

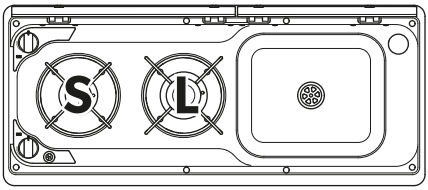

13

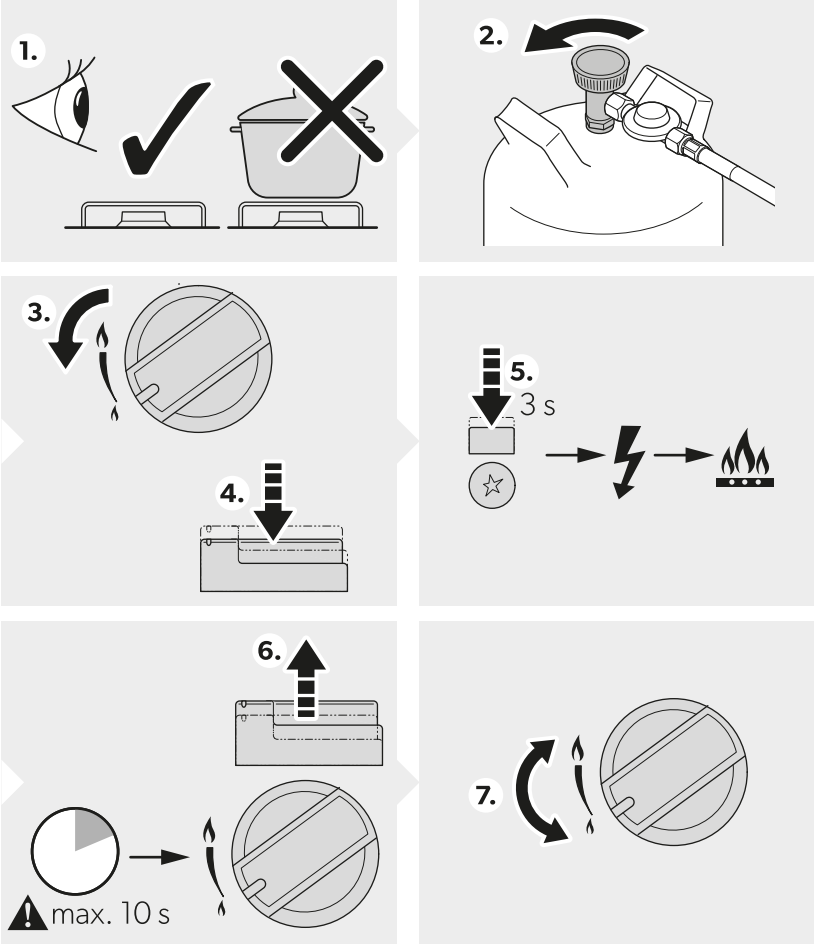

14

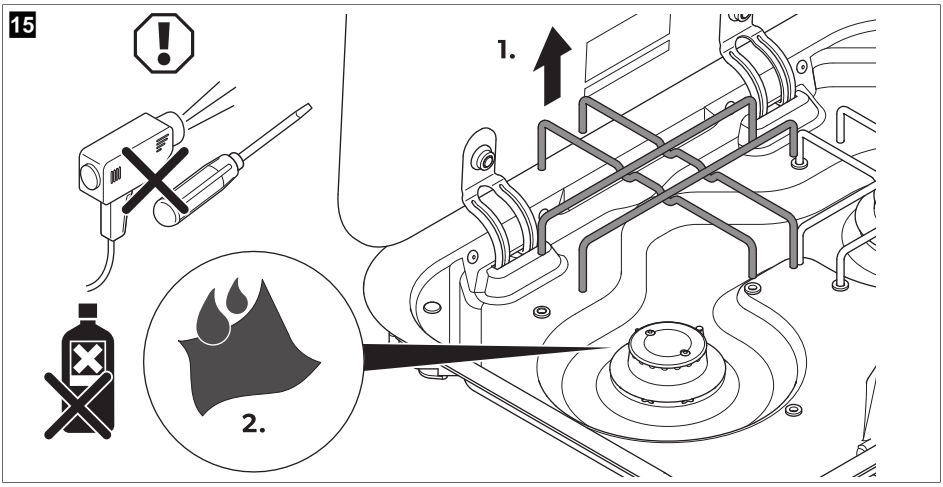
15
1.
2.

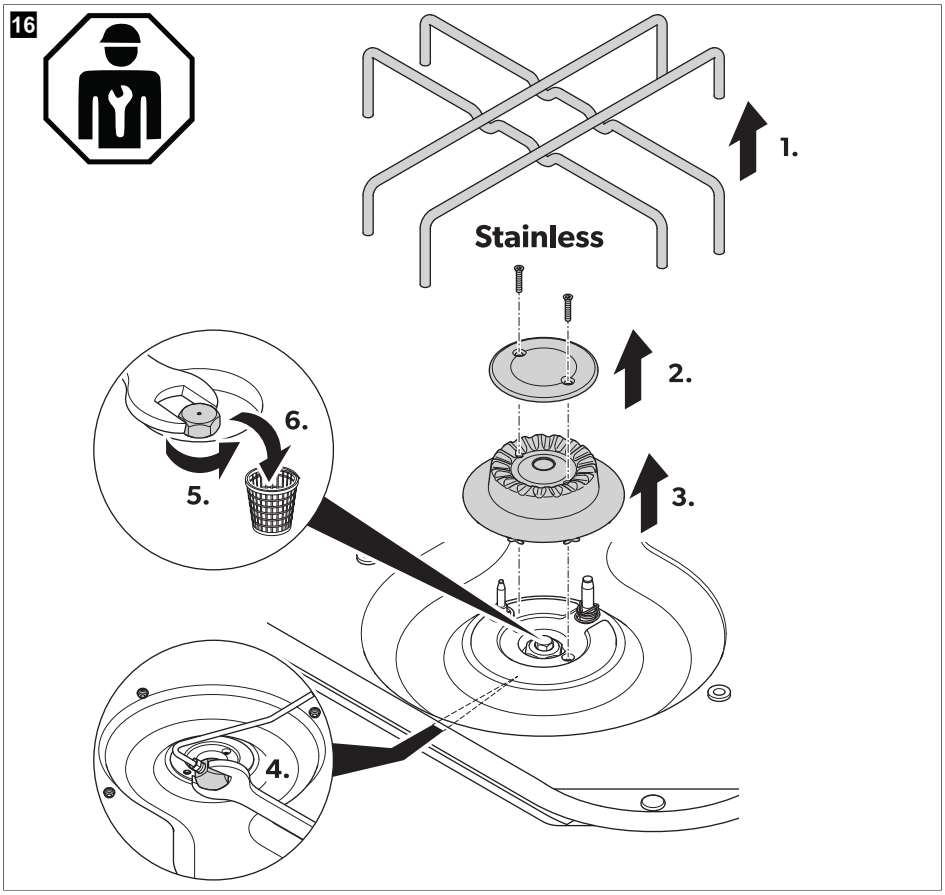
16
1.
Stainless
2.
3.
4.
5.
6.

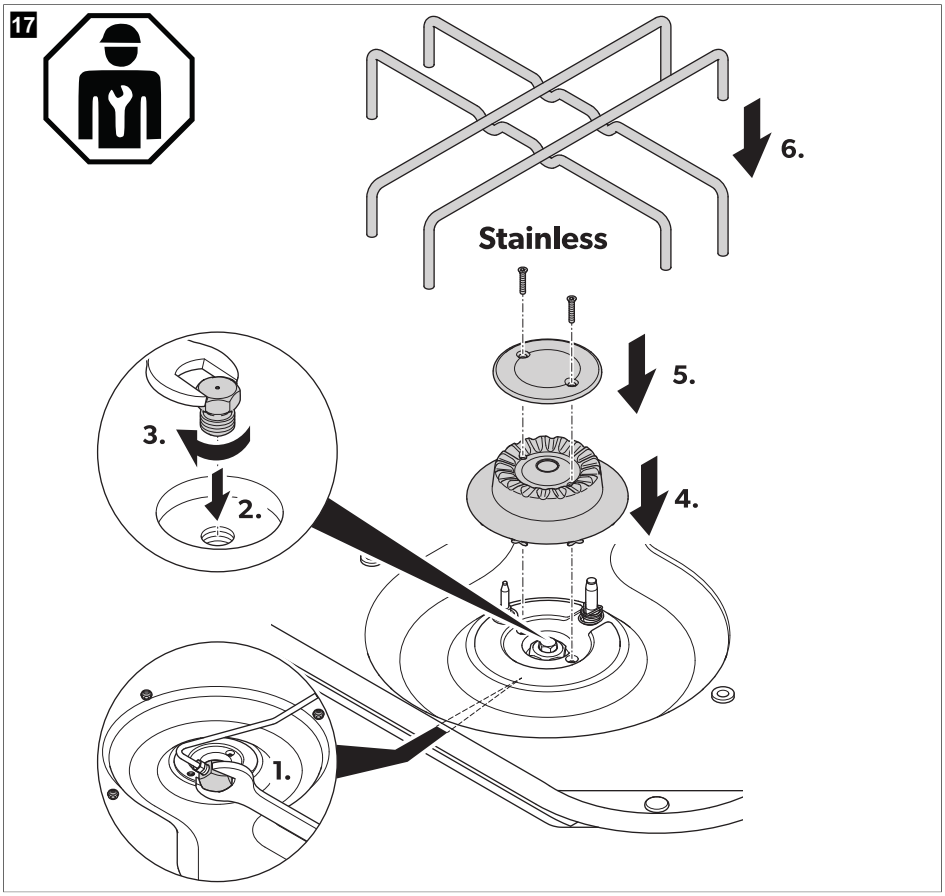
17
6.
Stainless
5.
3.
2.
4.
1.

English

1 Important notes

Please read these instructions carefully and follow all instructions, guidelines, and warnings included in this product manual in order to ensure that you install, use, and maintain the product properly at all times. These instructions MUST stay with this product.

By using the product, you hereby confirm that you have read all instructions, guidelines, and warnings carefully and that you understand and agree to abide by the terms and conditions as set forth herein. You agree to use this product only for the intended purpose and application and in accordance with the instructions, guidelines, and warnings as set forth in this product manual as well as in accordance with all applicable laws and regulations. A failure to read and follow the instructions and warnings set forth herein may result in an injury to yourself and others, damage to your product or damage to other property in the vicinity. This product manual, including the instructions, guidelines, and warnings, and related documentation, may be subject to changes and updates. For up-to-date product information, please visit documents.dometic.com.

2 Explanation of symbols

A signal word will identify safety messages and property damage messages, and also will indicate the degree or level of hazard seriousness.

DANGER!
Indicates a hazardous situation that, if not avoided, will result in death or serious injury.

WARNING!
Indicates a hazardous situation that, if not avoided, could result in death or serious injury.

CAUTION!
Indicates a hazardous situation that, if not avoided, could result in minor or moderate injury.

NOTICE!
Indicates a situation that, if not avoided, could result in property damage.

NOTE Supplementary information for operating the product.

3 Safety instructions

General safety

WARNING! Explosion hazard

- This device may only be repaired by qualified personnel. Inadequate repairs may cause serious hazards.
- This device must be installed in accordance with any national regulations in force in the country of use.
- DO NOT SPRAY AEROSOLS IN THE VICINITY OF THIS DEVICE WHILE IT IS IN OPERATION.
- DO NOT MODIFY THIS DEVICE.
- DO NOT USE AN ADAPTER AT THE CYLINDER CONNECTION.
- Do not remove or replace any components of this device.
- Do not twist, stretch, pinch, or apply any other load to the gas supply line.
- The device is not suitable for connection with a hose assembly.

WARNING! Suffocation hazard

> Operating this device in an unventilated area will reduce the amount of oxygen in this area.
> This device must only be used in a well ventilated space.
> DO NOT USE THIS DEVICE AS A SPACE HEATER.
> This device is not connected to a combustion products evacuation device. It shall be installed and connected in accordance with AS/NZS 5601.2 and all other relevant national and local regulations. Particular attention shall be given to the relevant requirements regarding ventilation.

WARNING! Fire hazard

> Do not leave this device unattended when hot or in use.
> Children must be supervised to ensure that they do not play with the device.
> Keep a suitable fire extinguisher ready. Ensure that the fire extinguisher is checked by skilled personnel in regular intervals.
> Remove all packaging materials and transport protections before installation and use.

WARNING! Burn hazard

> Keep hands, face and hair away from burners.
> Do not wear loose clothing or allow long hair to hang freely while lighting or using this device.
> Keep children and pets away.
> Carefully monitor all activity around this device to avoid burns or other injuries.

WARNING! Health hazard

This device is not intended for use by persons (including children) with reduced physical, sensory or mental capabilities, or lack of experience and knowledge, unless they have been given supervision or instruction concerning use of the device by a person responsible for their safety.

CAUTION! Risk of injury

In case of glass lid breakage:

- Shut off immediately all burners and any electrical heating element and isolate the device from the power supply.
- Do not touch the device surface.
- Do not use the device.

NOTICE! Damage hazard

> Close the glass lid before beginning a journey.
> Turn off all the burners before closing the glass lid.
> Keep heavy or sharp objects away from the surface of the glass lid.

Safety precautions when handling liquid gas

WARNING! Explosion hazard

> After use always turn off the liquid gas cylinder.
> Store liquid gas cylinders in a safe and clearly marked location in accordance with all national and local regulations.
> Store liquid gas cylinders away from heating or cooking devices and other light or heat sources in a well-ventilated area out of the reach of children.
> **Never** store liquid gas cylinders in unventilated areas or below ground level (funnel-shaped holes in the ground).
> Do not store liquid gas cylinders on their side.
> Keep liquid gas cylinders away from direct sunlight. The temperature should not exceed 50°C.

Operating the device safely

Fig. 1 on page 3

DANGER! Hazard of carbon monoxide poisoning

The process of burning liquid gas produces carbon monoxide which accumulates inside enclosed areas. Only use this device with sufficient ventilation in accordance with AS/NZS 5601.2.

DANGER! Suffocation hazard

> The use of a gas cooking appliance results in the production of heat, moisture and products of combustion in the room in which it is installed.
  - Ensure that the kitchen is well ventilated especially when the device is in use.
  - Keep natural ventilation holes open or install a mechanical ventilation device (e.g. a mechanical extractor hood).
> Prolonged intensive use of the appliance may require additional ventilation, for example the increasing of mechanical ventilation where present, additional ventilation to safely remove the products of combustion to outside air whilst also providing room air changes with additional ventilation. **Consult a professional before installation of the additional ventilation.**

WARNING! Explosion hazard

> Do not use this device if it is leaking, damaged or does not operate properly.
> Never use the device in the following situations:
  - At petrol stations
  - On ferry boats
  - While transporting the vehicle in which the device is installed with a transport vehicle or tow truck
> In case of fire shut off the gas supply.
> DO NOT PLACE CHEMICALS, FLAMMABLE MATERIALS OR SPRAY AEROSOLS NEAR THIS DEVICE.
> Never use a naked flame to check for gas leaks.
> In case there is a smell of gas:
  - Do not attempt to light this device.
  - Extinguish any naked flames.
  - Turn off the gas supply.
  - Have the gas system checked by a specialist.
> Only attach or detach the gas container away from a naked flame, pilot light or other source of ignition and only when this device is cool to touch.
> Before using the gas container, check that the seal between this device and the gas container is in place and in good condition. If the seal is damaged or worn, do not use this device.
> Turn off the gas supply at the gas container after use.

WARNING! Fire hazard

> DO NOT USE OR STORE FLAMMABLE MATERIALS IN OR NEAR THIS DEVICE (E.G. PAPER, TEXTILE).
> DO NOT PLACE ARTICLES ON OR AGAINST THIS DEVICE.
> Keep flammable objects away from the burner.
> Position cookware handles as follows:
  - Never allow cookware handles to extend beyond the edge of the device.
  - Turn cookware handles inward, but not extending over other burners.
> Do not excessively heat grease or oil.
> Only use dry pot holders to handle hot cookware.
> Turn off the device before removing the cookware.
> Only operate this device when an adult can attend to it.

WARNING! Burn hazard

Accessible parts may be very hot. Keep young children away.

CAUTION! Burn hazard

> Use protective gloves when handling hot components.
> Leave this device to cool down properly before you touch it with bare hands.
> If igniting a burner manually:
  - Use long matches or a suitable lighter.
  - Remove your hand quickly as soon as the burner ignites.
> The use of alcohol or prescription or non-prescription drugs may impair your ability to properly assemble or safely operate this device.

4 Scope of delivery

Description	PI8022	MO9722R
Cooktop	x	–
Cooktop combination	–	x
Fastening screws	x	x
Countertop seal	x	x
Siphon and rubber seal	–	x
Waste outlet	–	x
Installation and Operating Manual	x	x

5 Intended use

The gas cooktops and combinations are intended for installation in a kitchen or countertop in caravans or motor homes.

The product is suitable for:

- Cooking and frying food in suitable cookware
- Use with gas of the allowed gas category (Universal LPG)

The product is **not** suitable for:

- Use as a space heater
- Outdoor use
- Use on boats

This product is only suitable for the intended purpose and application in accordance with these instructions.

This manual provides information that is necessary for proper installation and/or operation of the product. Poor installation and/or improper operation or maintenance will result in unsatisfactory performance and a possible failure.

The manufacturer accepts no liability for any injury or damage to the product resulting from:

- Incorrect installation, assembly or connection, including excess voltage
- Incorrect maintenance or use of spare parts other than original spare parts provided by the manufacturer
- Alterations to the product without express permission from the manufacturer
- Use for purposes other than those described in this manual

Dometic reserves the right to change product appearance and product specifications.

6 Technical description

6.1 Specifications of the different models

Find the detailed specification in the following table:

Model	No. of burners	Glass lid	Sink
MO9722R	2	x	x
PI8022	2	x	–

6.2 Control panel

Fig. 2 on page 4

Icon	Explanation	Icon	Explanation
	Low flame		Flame off
	High flame		Spark ignition button

6.3 Distance between pot grid and countertop surface

Fig. 3 on page 5

6.4 Function

The device is equipped with a flame supervision device (FSD) which interrupts the gas supply approx. 30 s after the flame goes out.

Models with glass lid only: The device is additionally equipped with a safety function that instantly interrupts the gas supply when the glass lid is closed.

The glass lid is equipped with soft-close hinges.

7 Installation

7.1 Installation location

> The installation location must have air vents with a cross-section of at least 150 cm².

> Observe the minimum distances.

Fig. 4 on page 6

* The distance to an range hood must be at least 650 mm. Observe the information specified in the installation instructions for the range hood.

Models with sink only: The distance between the edge of the sink and the side wall can be reduced up to 0 mm.

> If this cooktop is installed under a closable countertop lid or cover, observe the requirements for **stowed appliances** in accordance with AS/NZS5601.2. Ensure that all minimum distances to combustible materials are maintained while the cooktop is in use.

> Ensure that there are no drafts at the installation location.

7.2 Installation steps

1. Create a cut-out in the countertop.

   Fig. 5 on page 7

2. Attach a rubber seal between the countertop and the device.

NOTE Contact the manufacturer if the device is not supplied with a rubber seal.

3. Fasten the device in the countertop.

   Fig. 6 on page 7
   Fig. 7 on page 8

4. Affix the enclosed duplicate of the data label in accordance with AS/NZS 5263.1.1-2.15.2.1 visibly and permanently on the surface of the device or to an suitable adjacent surface.

7.3 Connecting the device to the gas supply

The assembly and installation of the gas connection must be performed by a qualified person who has demonstrated skill and knowledge related to the construction, installation and operation of gas appliances and has received safety training to identify and avoid the hazards involved.

WARNING! Explosion hazard

> Only use LP gas containers with a certified pressure regulator.
> Compare the pressure information on the rating label with the pressure information on the LP gas containers.
> Avoid any stress on the gas pipe system during and after installation.

Observe the following instructions for the connection:

- Observe the national requirements.
- The device is not suitable for connection with a hose assembly.
- The entire gas line must be free of stress. Fasten the gas line to the side or rear wall of the surrounding furniture parts so that no loads are placed on the actuators.
- Support the piping with clamps made of the same material as the pipe or a material compatible with the pipe at distances no greater than those specified:
  - Vertical runs: 1250 mm
  - Horizontal runs: 600 mm

  Fasten the clamps with suitable nuts and bolts, rivets, or screws.
- Install supports at a maximum distance of 150 mm from each bend, join and tee.
- Observe the position of the gas connection point on the device.
  Fig. 8 on page 8
- The gas supply connection points shall be accessible with the device installed.

1. Connect the pipes (see chapter Connecting the pipes on page 21).
2. Attach a sign above the device with the following text:
   WARNING!

   When cooking, additional ventilation must be provided, for example, by opening windows near the device.

   The device must not be used as a space heater.
3. Open the gas supply.
4. Check all connections for leaks with soapy water.

WARNING! Explosion hazard
Never check for leaks with an open flame or near sources of ignition.

✓ There are no leaks if no bubbles form.

7.3.1 Connecting the pipes

NOTE Use a suitable SAE nut and a copper gas pipe that is flared to suit the SAE 5/16" (1/2-20UNF) connection.

Fig. 9 on page 9

1. Align the flared end of the SAE nut with the flared end of the gas pipe.

2. Tighten the SAE nut by hand until you feel resistance.
3. Hold the fitting body in place with one open-end wrench and tighten the SAE nut another half turn with a second open-end wrench to make the seal gas-tight.

7.3.2 Assembling the waste outlet

(Models with sink only)

> Assemble the waste outlet as shown:

Fig. 10 on page 9

7.4 Connecting the device to the DC power supply

NOTE The flame supervision device and the safety function for the glass lid only works if the DC power supply is connected with correct polarity.

1. Connect the device as shown.

Fig. 11 on page 10

bk	black	**rd**	red

2. Add a 1 A fuse to the positive cable near the battery.

7.5 Testing the device

1. Ignite all burners both individually and concurrently to ensure correct operation of gas valves, burners and ignition.
2. Turn gas taps to low flame position and observe the stability of the flame for each burner individually and concurrently.

v Depending on the type of gas used, the appearance of the flame is as follows:

- Propane: Flame with blue center and well-defined contour
- Butane: Flame with light yellow tips when igniting the burner, gradually intensifying as the burner heats

3. Ensure correct operation of the flame failure protection.

CAUTION! Health hazard
In case the device fails to operate correctly after all checks have been carried out, shut off the gas supply at the main gas tap and contact an authorized service agent in your area. When satisfied with the device, instruct the user on the correct method of operation.

7.5.1 Performing a gas pressure test

NOTICE! Damage hazard
The burner and its bottom are made of aluminum. The fixing screws are made of stainless steel. Do **not** loosen the screws in hot conditions as you may damage the screw hole of the aluminum components.

Use the test point adapter to test the gas pressure at the test point of the cooktop.

The test point adapter is supplied separately with the device.

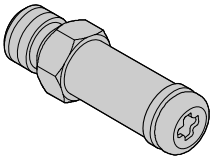

1. Remove one burner head and its injector.
2. Screw in the test point fitting.
3. Measure the pressure with the corresponding burner gas valve on high flame and with an inlet pressure of 2.75 kPa .

8 Using the cooktop/cooktop combination

WARNING! Burn hazard

> All parts of the device except the control panel become very hot while cooking. Do not touch the hot parts of the device during and after use. Leave the device to cool down properly.
> Do not use the sink during cooking. Leave the device to cool down properly before using the sink.
> If the device has glass lids and the glass lid of the sink is closed while cooking keep a minimum distance of 10 mm between the cookware and the glass lid of the sink.

CAUTION! Burn hazard
Remove any plastic accessories from the sink before cooking.

CAUTION! Burn hazard
Do not shut the glass lid when a burner is alight.

8.1 Switching on

DANGER! Hazard of carbon monoxide poisoning

> Before switching on the device, ensure that the area is sufficiently ventilated.
> Follow clause 7 of AS/NZS 5601.2 for ventilation requirements.

WARNING! Explosion hazard/Fire hazard
Only use gas of the allowed gas category (Universal LPG). Do not use any other fuels.

1. Choose suitable cookware for the selected burners according to the following table:

Fig. 12 on page 10

Burner (Burner sizes)	Cookware diameter	
S	10 … 16 cm	

Burner (Burner sizes)	Cookware diameter	
L	16 … 22 cm	

2. Switch the cooktop on as shown.

   Fig. 13 on page 11

3. Verify the correct function of the burner by visually inspecting the flame.

   Depending on the type of gas used, the flame should appear as follows:

   - Propane: Flame with a blue internal pin point and a clear outline.
   - Butane: Flame with a slightly yellow tip when turning on the burner. The yellow tip intensifies as the burner heats up.

4. If the flame does not look as described, switch the cooktop off (see chapter Switching off on page 24), wait until the gas has completely escaped, and proceed as follows:

   - Check the burner for soiling and clean the burner if necessary.
   - Check the quality of the gas and replace the gas container if necessary (see chapter Replacing the gas container on page 24).

8.2 Switching off

CAUTION! Risk of injury
Do not switch off the device by closing the glass lid.

> Switch the cooktop off as shown.

Fig. 14 on page 11

8.3 Replacing the gas container

WARNING! Explosion hazard

> Only replace the gas container in places with good ventilation.
> Ensure that there is no source of ignition nearby.
> Only change the gas container when the device is not in use and the gas supply to the device is switched off.

1. Switch the device off by turning the knob to the zero position.
2. Close the valve on the gas container.
3. Replace the gas cylinder according to the instructions from the gas fitting manufacturer.

9 Cleaning and maintenance

CAUTION! Burn hazard
Leave the device to cool down properly before cleaning, checking or maintaining the device.

9.1 Cleaning the device

Fig. 15 on page 12

1. Remove the pan support (Fig. 15, **1.**).
2. Clean the device with a soft, damp cloth (Fig. 15, **2.**).

Find additional care instructions for stainless steel and glass surfaces online on qr.dometic.com/beVsW0.

9.2 Annual safety check

The assembly and installation of the gas connection must be performed by a qualified person who has demonstrated skill and knowledge related to the construction, installation and operation of gas appliances and has received safety training to identify and avoid the hazards involved.

> For safety reasons, have the device checked by a qualified person every year for proper function. Any defects must be repaired.

9.3 Replacing the injectors

The assembly and installation of the gas connection must be performed by a qualified person who has demonstrated skill and knowledge related to the construction, installation and operation of gas appliances and has received safety training to identify and avoid the hazards involved.

> Let a qualified person replace the injectors as shown.

a) Removing the injectors:

Fig. 16 on page 13

b) Inserting the injectors:

Fig. 17 on page 14

10 Troubleshooting

WARNING! Risk of injury

> The service of the device must be performed by a qualified person.
> Do not modify the device.
> Disconnect the device from the power supply before carrying out any maintenance or servicing work.

Contact an authorized service agent if you observe one of the following abnormal conditions:

- Excessively yellow or sooting flame type
- Flame lifting off the burner ports
- Flame lighting back into the burner (normally associated with a popping sound)
- Objectionable odor of the flames combustion products

If a malfunction of the cooktop occurs that is not described above, first refer to the following table for possible causes and remedies before contacting an authorized service agent.

Problem	Possible cause	Suggested remedy
No spark when spark ignition button is pressed.	Spark ignition is defective	> Ignite the burner manually. > Contact an authorized service agent for repair.
Burner does not ignite. Spark ignition is working.	Gas supply valve is closed.	> Open the gas supply valve.
	Control button is set to (**Flame off**).	> Turn the control knob to the desired position between **Low flame** and **High flame**.
	Wrong control knob is turned.	> Ensure the control knob that is turned corresponds to the burner to be light.
	Burner ports are blocked.	> Remove, clean and reinsert the burner.
Burner goes out when the control knob is released	Control knob is not set between the position **Low flame** and **High flame**.	> Turn the control knob to the desired position between **Low flame** and **High flame**.
	Control knob not held down long enough for flame safeguard to engage.	> Press and hold the control knob for 5 s so that the flame safeguard can be activated.
	Faulty connection or defective flame safeguard.	> Contact an authorized service agent for repair.
Uneven flame pattern or slight flame lifting	Burner ports are blocked.	> Remove, clean and reinsert the burner.
At minimum flame setting, the flame is too high.	Incorrect setting of the regulator. Gas supply pressure too high. Wrong injection valve installed.	> Contact an authorized service agent for repair.
At maximum flame setting, the flame is too low.	Incorrect setting of the regulator. Gas supply pressure too low. Wrong injection valve installed. Injector or gas supply tube obstructed.	> Contact an authorized service agent for repair.
Low heat, slow cooking	Unsuitable cookware is used for the selected burners	> Use suitable cookware (see table in chapter Switching on on page 23).
Countertop surface or control knobs are overheating	Unsuitable cookware is used for the selected burners	> Use suitable cookware (see table in chapter Switching on on page 23).
	Cookware is not properly located on burner.	> Ensure the cookware is centered on the burner.

11 Disposal

Place the packaging material in the appropriate recycling waste bins, wherever possible. Consult a local recycling center or specialist dealer for details about how to dispose of the product in accordance with the applicable disposal regulations.

12 Warranty

If the product does not work as it should, please contact your retailer or the manufacturer's branch in your country (see dometic.com/dealer). The warranty applicable to your product is 3 year(s).

For repair and warranty processing, please include the following documents when you send in the device:

- A copy of the receipt with purchasing date
- A reason for the claim or description of the fault

Note that self-repair or nonprofessional repair can have safety consequences and might void the warranty.

Australia only
Our goods come with guarantees that cannot be excluded under the Australian Consumer Law. You are entitled to a replacement or refund for a major failure and for compensation for any other reasonably foreseeable loss or damage. You are also entitled to have the goods repaired or replaced if the goods fail to be of acceptable quality and the failure does not amount to a major failure. The benefits provided to you as the consumer by this warranty are in addition to other rights and remedies available to you under the law.

New Zealand only
This warranty policy is subject to the conditions and guarantees which are mandatory as implied by the Consumer Guarantees Act 1993(NZ).

Local support
Please find local support at the following link address: dometic.com/dealer

13 Technical data

Applied standards: GB 16410-2020

Gas category	Universal LPG
Gas connection pressure	2.75 kPa
Connection voltage	12 V ⎓ (1 A fuse)
Inspection/certification	

Fig. 12 on page 10

Model	**Burner S**		**Burner L**	
	Injector	Power	Injector	Power
MO9722R	0.57 mm	4 MJ/h	0.72 mm	6.2 MJ/h
PI8022	0.57 mm	4 MJ/h	0.72 mm	6.2 MJ/h

DOMETIC

dometic.com

YOUR LOCAL DEALER	YOUR LOCAL SUPPORT	YOUR LOCAL SALES OFFICE
dometic.com/dealer	**dometic.com/contact**	**dometic.com/sales-offices**

4445104957 2025-11-26

A complete list of Dometic companies, which comprise the Dometic Group, can be found in the public filings of:
DOMETIC GROUP AB • Hemvärnsgatan 15 • SE-17154 Solna • Sweden