DOMETIC

# CLIMATE CONTROL

# FJX

## Dometic FreshJet 7 Series Lite 48 V

EN **Roof Air Conditioner**
Installation Manual..... 3

# Copyright

© 2025 Dometic Group. The visual appearance of the contents of this manual is protected by copyright and design law. The underlying technical design and the products contained herein may be protected by design, patent or pending patent. The trademarks mentioned in this manual belong to Dometic Sweden AB. All rights are reserved.

# English


1 Important notes....3
2 Target groups....3
3 Explanation of symbols....3
4 Safety instructions....4
5 Scope of delivery....5
6 Accessories....6
7 Intended use....6
8 List of models....6
9 Explanations of symbols on the appliance....7
10 Technical limits and conditions....7
11 Installation....7
12 Wiring diagrams....17
13 Disposal....17
14 Technical data....17


## 1 Important notes

Please read these instructions carefully and follow all instructions, guidelines, and warnings included in this product manual in order to ensure that you install, use, and maintain the product properly at all times. These instructions MUST stay with this product.

By using the product, you hereby confirm that you have read all instructions, guidelines, and warnings carefully and that you understand and agree to abide by the terms and conditions as set forth herein. You agree to use this product only for the intended purpose and application and in accordance with the instructions, guidelines, and warnings as set forth in this product manual as well as in accordance with all applicable laws and regulations. A failure to read and follow the instructions and warnings set forth herein may result in an injury to yourself and others, damage to your product or damage to other property in the vicinity. This product manual, including the instructions, guidelines, and warnings, and related documentation, may be subject to changes and updates. For up-to-date product information, please visit documents.dometic.com.

## 2 Target groups

The mechanical installation must be executed by a qualified person who is familiar with the construction and operation of the equipment and the hazards involved.

The electrical power supply must be connected by a qualified electrician who has demonstrated skill and knowledge related to the construction and operation of electrical equipment and installations and has received safety training to identify and avoid the hazards involved.

## 3 Explanation of symbols

A signal word will identify safety messages and property damage messages, and also will indicate the degree or level of hazard seriousness.

**DANGER!**
Indicates a hazardous situation that, if not avoided, will result in death or serious injury.

**WARNING!**
Indicates a hazardous situation that, if not avoided, could result in death or serious injury.

**CAUTION!**
Indicates a hazardous situation that, if not avoided, could result in minor or moderate injury.

**NOTICE!**
Indicates a situation that, if not avoided, can result in property damage.

**NOTE** Supplementary information for operating the product.

# 4 Safety instructions

**WARNING! Failure to obey these warnings could result in death or serious injury.**

- Repair of the appliance may only be carried out by qualified personnel who are familiar with the risks involved and the relevant regulations. Inadequate repairs may cause serious hazards. For repair service, contact the service center in your country (see dometic.com/dealer).
- Servicing shall only be performed as recommended by the manufacturer.
- The appliance shall be installed in accordance with national electrical and mechanical installation regulations.
- **Electrical appliances are not toys.** Keep electrical appliances out of reach of children or infirm persons. Do not allow them to use electrical appliances without supervision.
- Persons whose physical, sensory or mental capabilities or whose lack of experience and knowledge prevent them from using the appliance safely should not use it without supervision or instruction by a responsible person.
- Do **not** undo the upper cover of the appliance in the event of a fire. Use approved extinguishing agents. Do not use water to extinguish fires.
- The appliance shall be stored in a room without continuously operating open flames (for example an operating gas appliance) and ignition sources (for example an operating electric heater).
- The appliance shall be stored horizontally at a dry, ventilated and covered location.
- Ensure that the working area is in the open or that it is adequately ventilated before breaking into the system or conducting any hot work. A degree of ventilation shall continue during the period that the work is carried out. The ventilation should safely disperse any released refrigerant and preferably expel it externally into the atmosphere.
- Under no circumstances shall potential source of ignition be used in the searching for or detection of refrigerant leaks. A halide torch or any other detector using naked flame shall not be used. Electronic leak detector or leak detection fluids (eg. Bubble method, fluorescent method agents) can be used to detect refrigerant leaks. If a leak is suspected, all naked flames shall be removed/extinguished. If a leakage of refrigerant is found which requires brazing, all of the refrigerant shall be recovered from the system or isolated in a part of the system remote from the leak.
- Do not pierce or burn the appliance.
- Be aware that refrigerants may not contain an odor.
- The roof air conditioner shall be installed in a vehicle with a floor area larger than $4\ m^2$ .
- Ensure that there are no objects within the vehicle which could obstruct the attachment of the air distribution box or the cooled air from flowing through the swiveling air distribution nozzles.

**CAUTION! Failure to obey these cautions could result in minor or moderate injury.**

- Only operate the appliance if you are certain that the housing and the cables are not damaged.
- Do not use the appliance near flammable fluids or in closed rooms.
- Ensure that no combustible objects are stored or installed near the air outlet. A distance of at least 50 cm must be kept.

> Do not reach into air outlets or insert any foreign objects in the appliance.
> Always wear protective goggles and gloves.

**NOTICE! Damage hazard**

> The appliance shall be stored so as to prevent mechanical damage from occurring.
> Before installation, check whether any vehicle components could be damaged by the installation of the appliance (such as lamps, cupboards, doors). The vehicle manufacturer may have already provided points where the opening for the installation of the appliance can be made without any risk of weakening the construction or cutting power cables.
> Before installation, consult the vehicle manufacturer whether the construction is designed for the static weight and the loads of the roof air conditioner when the vehicle is in motion.
> Select a flat and sufficiently level area at the center of the vehicle roof between two longitudinal sections for installation.
> The roof inclination of the installation surface may not exceed 10 ° .
> Do not make any alterations or conversions to the appliance.
> Never drive through automatic car washes when the appliance is mounted.
> If faults occur in the refrigerant circuit, the system must be checked by a specialist company and repaired properly.
> The refrigerant must not be released into the air.
> Ask the vehicle manufacturer if the height entered in your vehicle documents needs to be altered due to the installation of the roof air conditioner.
> When breaking into the refrigerant circuit to make repairs or for any other purpose eg. Remove refrigerant or open the circuit by cutting or brazing, follow the working procedure as indicated in service manual.
> If charging refrigerant is needed, follow the charging procedure as indicated in service manual.
> When removing the refrigerant from system, follow the recovery procedure as indicated in service manual.

# 5 Scope of delivery

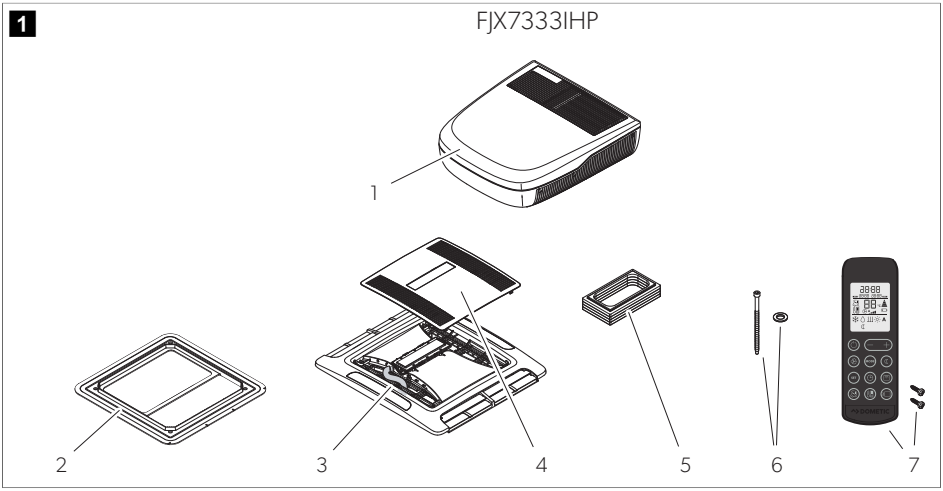

| No. in Fig. 1 on page 5 | Quantity | Description |
|---|---|---|
| 1 | 1 | Roof top unit |
| 2 | 1 | Roof frame |
| 3 | 1 | Air distribution box (ADB) |
| 4 | 1 | ADB center cover |
| 5 | 4 | Duct section |
| 6 | 4 | Fastening bolt |
| 7 | 1 | Remote control |

# 6 Accessories

Available as accessories (not included in the scope of delivery):

| Description | Ref. no. |
|---|---|
| Extension duct kit (includes 4 duct sections) | 4450035514 |
| Bolt kit M6 x 160 mm (for 60 … 100 mm roof thicknesses) | 4450035513 |
| Filters for FreshJet FJX7333IHP | 4450025683 |

# 7 Intended use

The roof air conditioner is only designed for installation on the roof of a caravan or recreational vehicle to provide cooling and heating.

The roof air conditioner is **not** suitable for trains, houses, and apartments. The roof air conditioner is **not** suitable for installation in construction machines, agricultural machines, or similar equipment.

This product is only suitable for the intended purpose and application in accordance with these instructions.

This manual provides information that is necessary for proper installation and/or operation of the product. Poor installation and/or improper operation or maintenance will result in unsatisfactory performance and a possible failure.

The manufacturer accepts no liability for any injury or damage to the product resulting from:

- Incorrect installation, assembly or connection, including excess voltage
- Incorrect maintenance or use of spare parts other than original spare parts provided by the manufacturer
- Alterations to the product without express permission from the manufacturer
- Use for purposes other than those described in this manual

Dometic reserves the right to change product appearance and product specifications.

# 8 List of models

The following table shows which function applies to a specific model:

● Feature is available

○ Feature is upgradable

| | FJX7333IHP |
|---|---|
| Automatic | ● |
| Cooling | ● |
| Heating | ● |
| Ventilation | ● |
| Dehumification | ● |
| Air purifier | ● |
| ADB light | ● |
| External light | ○ |
| Timer | ● |
| Sleep | ● |
| Inverter | ● |

# 9 Explanations of symbols on the appliance

Warning! Low burning velocity material.

Read operating manual.

Read service manual.

# 10 Technical limits and conditions

The roof air conditioner is intended for vehicles with the following roof thicknesses:

- 25 mm … 60 mm for a roof cutout of 400 mm × 400 mm
- 32 mm … 60 mm for a roof cutout of 360 mm × 360 mm

The roof top air conditioner will operate at ambient temperatures between – 2°C … 52°C. The roof air conditioner is designed to be installed within ± 10 ° of the horizontal plane.

# 11 Installation

**DANGER! Electrocution hazard**

> The electrical power supply in the RV must be connected by a qualified electrician who has demonstrated skill and knowledge related to the construction and operation of electrical equipment and installations and has received safety training to identify and avoid the hazards involved.

> Disconnect all power supplies including inverters when working on the roof air conditioner.

> Ensure that the appliance power supply cannot be reconnected during installation or maintenance.

**WARNING! Electrocution hazard**

> The appliance shall be installed in accordance with national wiring regulations.
> If the appliance replaces a window or hatch with a safety relevant forced venting function, an additional safety venting device (e.g. a mushroom fan or similar) needs to be added. In doubt consult the vehicle manufacturer.
> After the installation of the roof air conditioner, an exhaust chimney in proximity to the roof air conditioner has to rise at least 10 cm above it. If necessary, prolong the exhaust chimney. Observe the instructions of the heating manufacturer.

**CAUTION! Beware of injury**

> Improper installation of the roof air conditioner can result in irreparable damage to the appliance and put the safety of the user at risk.
> Always have someone to help you when carrying or lifting the roof air conditioner.
> Before installation, check the location of existing wiring harnesses, wires, and other components within the installation area, in particular those which are not visible when installing the appliance (when drilling or screwing etc.).
> Attach and lay the cables so that they cannot be tripped over or damaged.
> Always wear the protective goggles and gloves.

**NOTICE! Damage hazard**

> The appliance is a sealed system with a closed refrigerant circuit. Do not open or manipulate, unless you are an appropriately qualified technician.
> Use cable ducts to lay cables through walls with sharp edges.
> Do not lay loose or bent cables next to electrically conductive materials (metal).
> Do not pull on the cables.
> Check that cabling will not be subject to wear, corrosion, excessive pressure, vibration, sharp edges or any other adverse environmental effects. The check shall also take into account the effects of aging or continual vibration from sources such as compressors or fans.
> Observe the structural strength of the roof of the vehicle. The roof of the vehicle must be able to bear the weight of the roof air conditioner without being indented or deformed. In doubt consult the vehicle manufacturer.

**NOTE**

- You find the appliance's specifications in the Technical data on page 17 and on the following data plates:
- Roof top unit data plate Fig. 2 on page 9
- ADB data plate Fig. 3 on page 9

Find more information on roof air conditioners in the operating manual, such as the technical description or the controls, see qr.dometic.com/besLup.

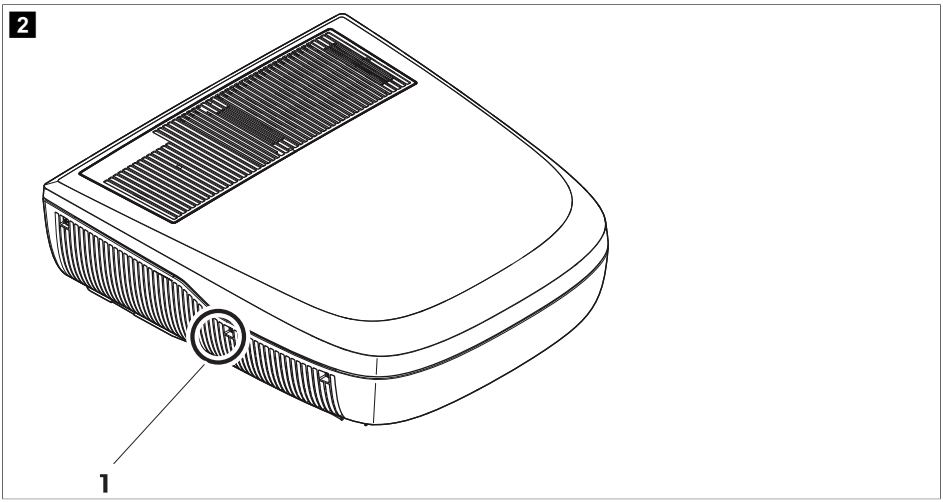


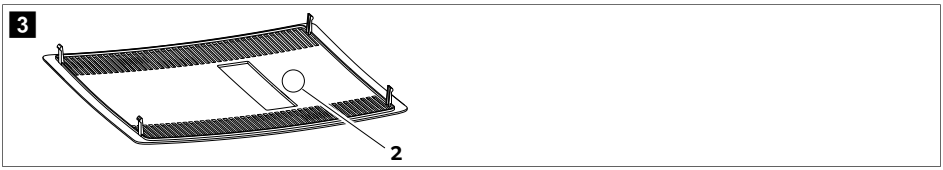


1. Choose your way of installing the roof air conditioner:
   - Make a new opening. In this case the opening must be reinforced by an appropriate frame.
   - Use an existing opening in the vehicle such as a roof hatch or replacing an old roof air conditioner.
   - Ensure that you keep the following clearances:

| **Model** | **Object height < 60 mm** | **Object height > 60 mm** | | | |
|---|---|---|---|---|---|
| | **All 4 sides** | **Right** | **Left*** | **Rear*** | **Front** |
| FJX7333IHP | 50 mm | 150 mm | 150 mm | 150 mm | 150 mm |

* In this context "left" and "rear" means that you are looking at the unit from the front of the vehicle.

**Making a new opening**

2. Select an area at the center on the roof between two longitudinal supports.

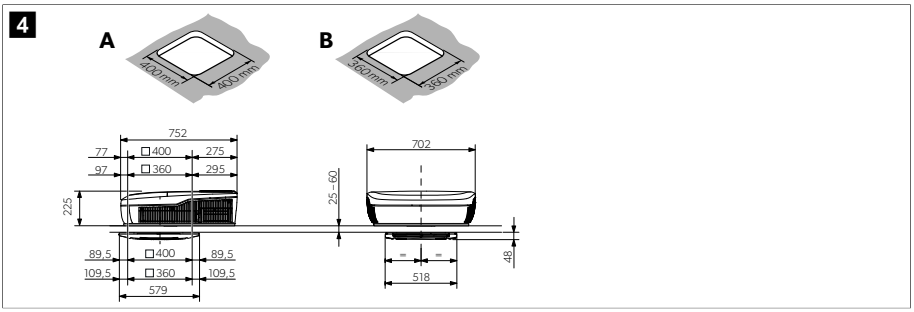


3. Mark the position and size of the opening (400 × 400 mm).

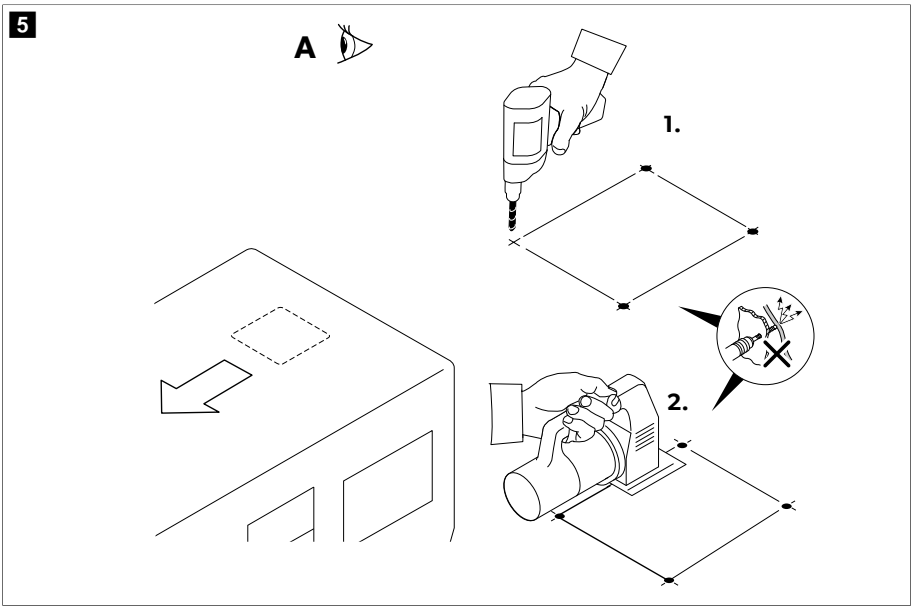


4. Drill out the corners (**A**).

**NOTICE! Damage hazard**
Ensure that no electrical power cables are damaged. Check where the electrical cables are located.

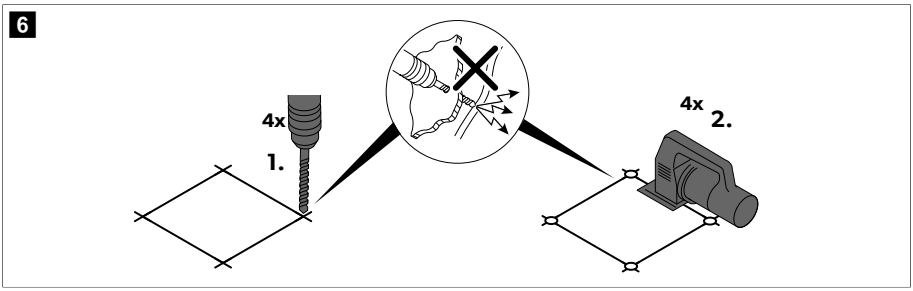


5. Carefully cut out the opening on the roof using a keyhole saw or a similar tool (**B**).
6. Check whether the roof hole needs reinforcing.
7. If needed, remove the foam according to the width of your reinforcing rails (not in scope of delivery) (**A**).

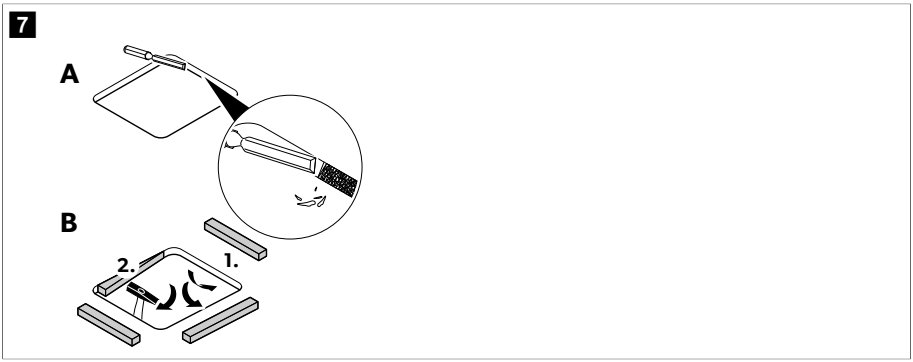


8. Fit the reinforcing rails (**B**).

**Installing in an existing opening**

9. Remove all screws and fixtures of the existing roof hatch or air conditioner.

10. Take out the roof hatch or roof air conditioner.
11. Remove the sealant around the opening using a scraper or similar tool.

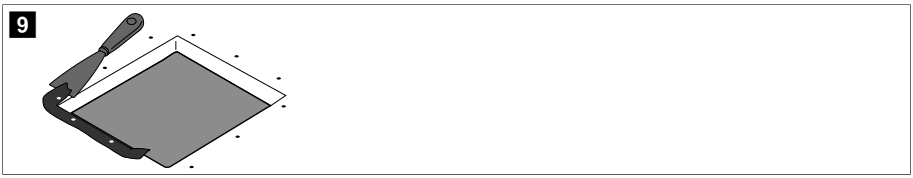


**Laying the connecting cables**

12. Check that the voltage specification on the roof air conditioner data plate is the same as that of the power supply. The roof air conditioner must be connected to an electric circuit which is able to supply the required current (Technical data on page 17).
13. Ensure that the power supply has a residual current circuit breaker. If missing, install the residual current circuit breaker.
14. Install an all-pole switch.
15. Ensure the correct cable thickness to carry the maximum electrical current as specified in product data plate.
16. Make an opening on one side in order to feed through the power supply cable.

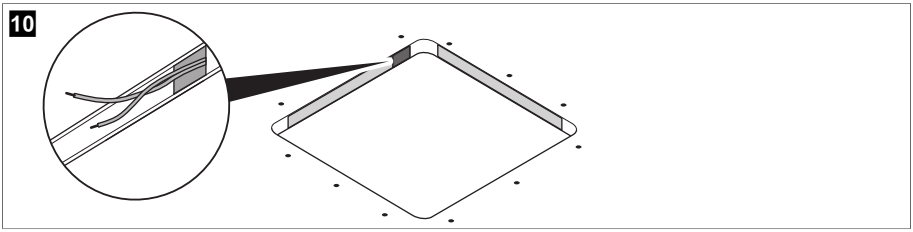


17. Feed the power supply cable through the opening into the vehicle interior.

**Installing the roof top unit**

18. Seal around the under side of the roof frame with flexible non-hardening butyl sealing compound (e.g. SikaLastomer-710, Selleys Butyl Mastic, Bostik ezycaulk butyl sealant, or similar products). Observe the sealant manufacturer's instructions.

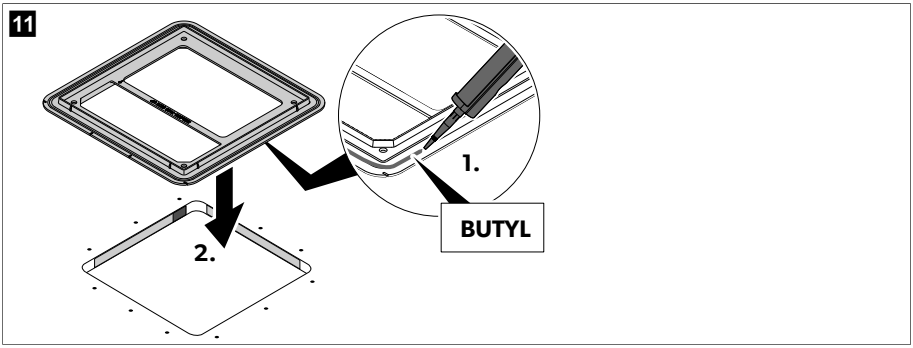


19. Orientate the roof frame based on opening size.
20. Fit the roof frame into the roof opening.

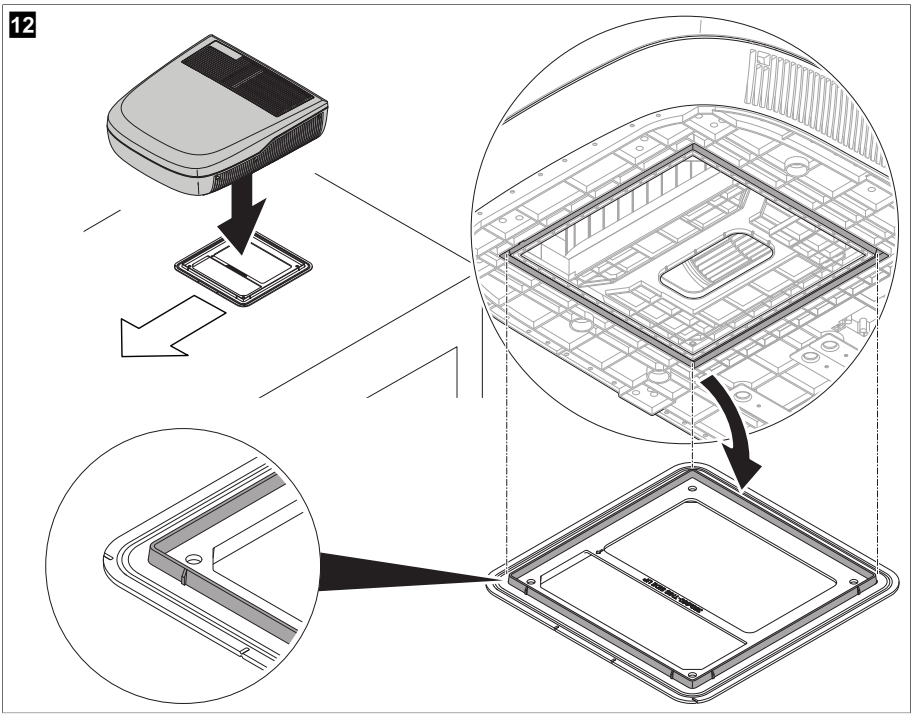


21. Lift the roof top unit onto the roof of the vehicle. Observe the direction of travel.
22. Position the roof top unit into the roof frame and align into the roof frame's groove. To align into the roof frame's groove use the corners at the front of the roof frame.

**Electrical connection**

23. Connect the power supply cable.

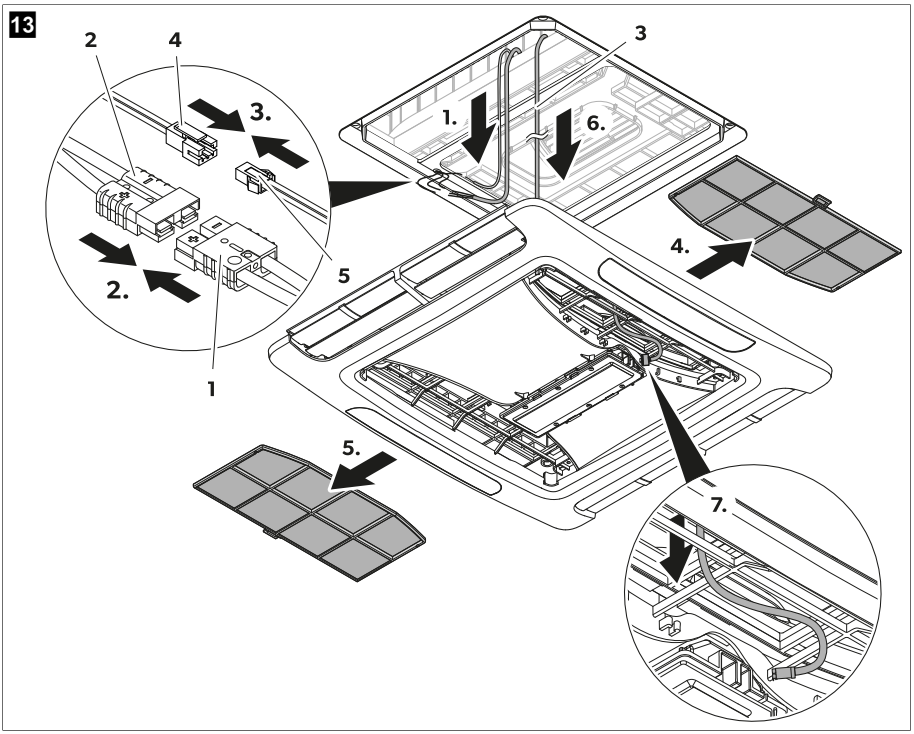


a) Connect the 2 connecting cables (**1** and **2**).

Wire gauge: UL1015 AWG8

Connector model: Plastic part: 992-BK, Connector part: 5952-BK

b) Connect the 2 sensing cables (**4** and **5**).

Wire gauge: UL2517 AWG22/2C

Connector model: Plastic part: SMP-02V-NC, Connector part: SHF-001T-0.8BS

c) Connect the power cable and sensing cable to the power supply.

24. Connect the communication cable.

a) Pull out the filter slightly to create a gap for the communication cable (**3**).

b) Feed the communication cable through the gap and locate the wire in the opening.

c) Connect the communication 4-pin plug into the socket on the side of the display in the ADB. Ensure that the cable is located into the small opening away from the filter area.

d) Secure excess cable into the holders.

**Installing the ADB**

25. Stack the duct sections and place against the roof thickness: Ensure that the duct height matches the roof height or use the table as guide.

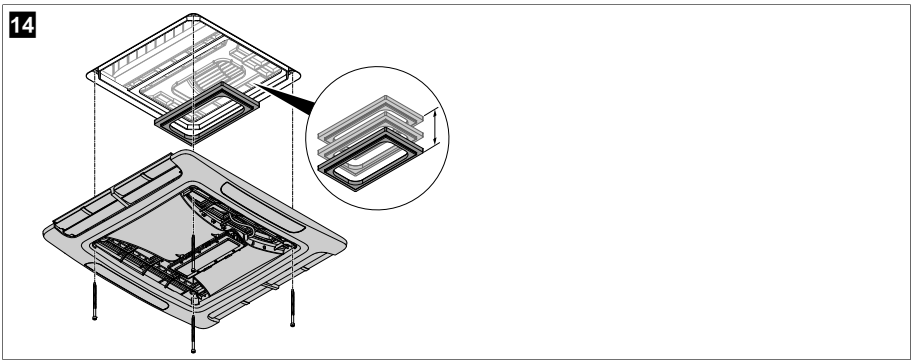


| Roof thickness | Number of duct sections |
|---|---|
| 25 … 35 mm | 1 |
| 35 … 45 mm | 2 |
| 45 … 55 mm | 3 |
| 55 … 60 mm | 4 |

**NOTE** Additional duct sections can be purchased for thicker roofs.

26. Attach the required number of duct sections on the ADB.
27. Fasten the ADB to the ceiling through the roof top unit with the 4 bolts supplied. Tighten the screws using a torque spanner and a fastening torque of 2.5 Nm ± 0.3 Nm.

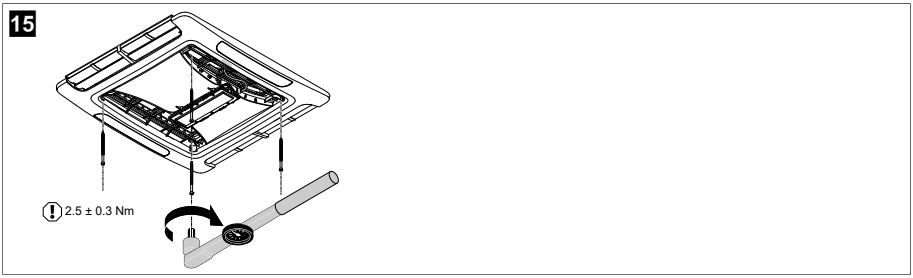


28. Push the filter back fully ( Fig. 16 on page 16).If the filter is bent, press the front of the filter upwards while sliding it back into place ( Fig. 17 on page 16).

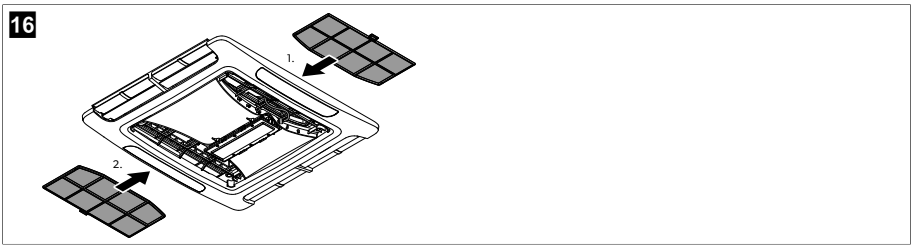


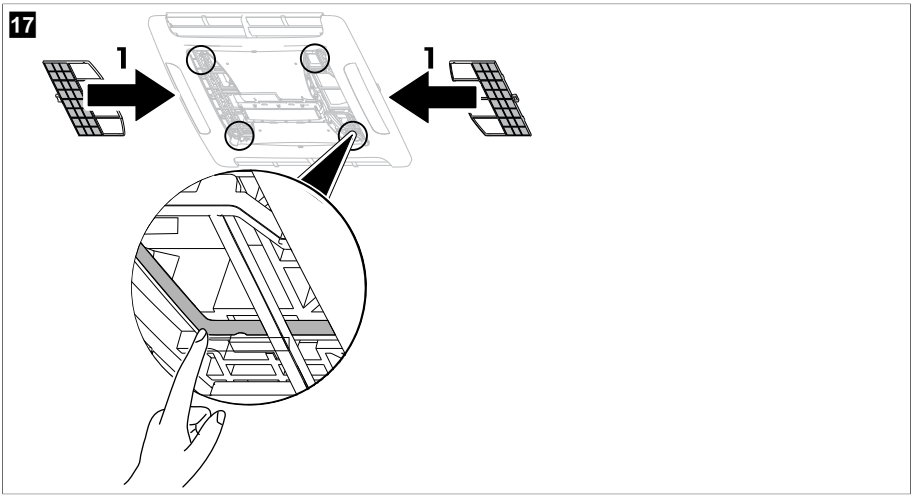


29. Clip the center cover to the ADB.

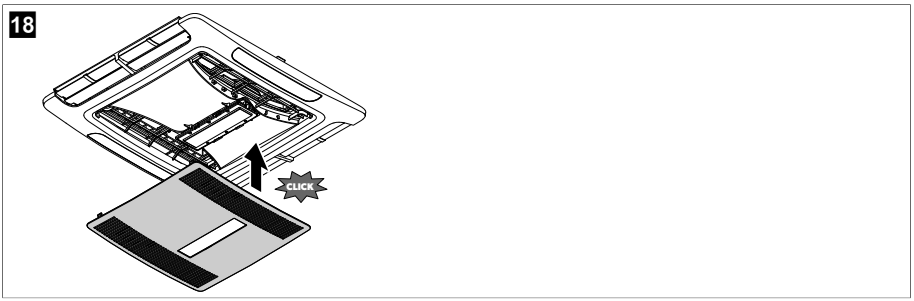


30. Ask the vehicle manufacturer if a technical inspection is required after fitting an roof air conditioner and whether the height entered in the vehicle documents needs to be altered:
    - FreshJet FJX7333: Increased height 225 mm

v The installation is now completed.

Connect to the power supply and test if the roof air conditioner works.

# 12 Wiring diagrams

**FJX7333IHP**

19

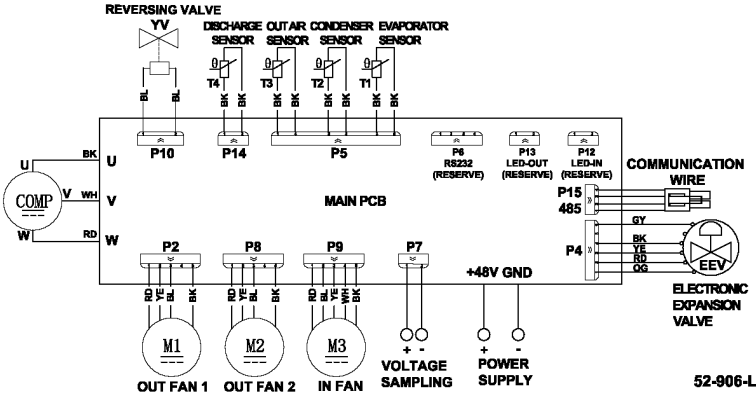


# 13 Disposal

Place the packaging material in the appropriate recycling waste bins, wherever possible. Consult a local recycling center or specialist dealer for details about how to dispose of the product in accordance with the applicable disposal regulations.

Protect the environment! Do not dispose of any batteries with general household waste. Return defective or used batteries to your retailer or dispose of them at collection points.

# 14 Technical data

20

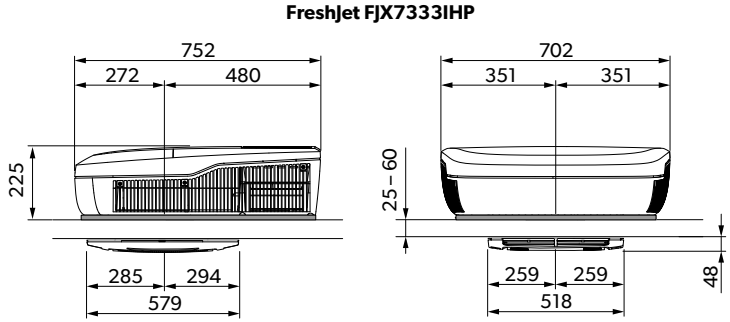


This product contains fluorinated greenhouse gases.

The cooling unit is hermetically sealed.

| | FreshJet FJX7333IHP |
|---|---|
| Cooling capacity based on ISO 5151 | 2523 W |
| Heating capacity based on ISO 5151 | 2218 W |
| Rated DC input voltage | 48 V |
| DC voltage range | 45 … 51 V |
| Rated cooling current | < 28.6 A |
| Rated heating current | < 20.3 A |
| Required fuse | 50 A |
| Operating temperature range | –2°C … 52°C |
| Refrigerant | R32 |
| Refrigerant quantity | 420 g |
| $CO_2$ equivalent | 0.284 t |
| Global warming potential (GWP) | 675 |
| Protection class (roof top unit) | IPX4 |
| Noise level (highest fan setting) | < 60 dB(A) |
| Dimensions L x W x H | Fig. 20 on page 17 |
| Weight (roof top unit with air distribution box) | < 35 kg |

DOMETIC

**dometic.com**

## YOUR LOCAL DEALER

**dometic.com/dealer**

## YOUR LOCAL SUPPORT

**dometic.com/contact**

## YOUR LOCAL SALES OFFICE

**dometic.com/sales-offices**

A complete list of Dometic companies, which comprise the Dometic Group, can be found in the public filings of:
**DOMETIC GROUP AB** • Hemvärnsgatan 15 • SE-17154 Solna • Sweden

4445104417 4450035354 54-906-MAM01V 2025-03-10