DOMETIC

CLIMATE CONTROL

FJX

Dometic FreshJet 7 Series Lite 48 V

EN **Roof Air Conditioner**

Operating Manual.....3

Copyright

© 2025 Dometic Group. The visual appearance of the contents of this manual is protected by copyright and design law. The underlying technical design and the products contained herein may be protected by design, patent or pending patent. The trademarks mentioned in this manual belong to Dometic Sweden AB. All rights are reserved.

English

1 Important notes....3
2 Explanation of symbols....3
3 Safety instructions....4
4 Intended use....5
5 Explanations of symbols on the appliance....5
6 Technical limits and conditions....5
7 Technical description....5
8 Before initial use....10
9 Operation....10
10 Cleaning the roof air conditioner....16
11 Maintenance....17
12 Troubleshooting....20
13 Disposal....22
14 Warranty....23
15 Technical data....23

1 Important notes

Please read these instructions carefully and follow all instructions, guidelines, and warnings included in this product manual in order to ensure that you install, use, and maintain the product properly at all times. These instructions MUST stay with this product.

By using the product, you hereby confirm that you have read all instructions, guidelines, and warnings carefully and that you understand and agree to abide by the terms and conditions as set forth herein. You agree to use this product only for the intended purpose and application and in accordance with the instructions, guidelines, and warnings as set forth in this product manual as well as in accordance with all applicable laws and regulations. A failure to read and follow the instructions and warnings set forth herein may result in an injury to yourself and others, damage to your product or damage to other property in the vicinity. This product manual, including the instructions, guidelines, and warnings, and related documentation, may be subject to changes and updates. For up-to-date product information, please visit documents.dometic.com.

2 Explanation of symbols

A signal word will identify safety messages and property damage messages, and also will indicate the degree or level of hazard seriousness.

DANGER!
Indicates a hazardous situation that, if not avoided, will result in death or serious injury.

WARNING!
Indicates a hazardous situation that, if not avoided, could result in death or serious injury.

CAUTION!
Indicates a hazardous situation that, if not avoided, could result in minor or moderate injury.

NOTICE!
Indicates a situation that, if not avoided, can result in property damage.

NOTE Supplementary information for operating the product.

3 Safety instructions

WARNING! Failure to obey these warnings could result in death or serious injury.

- **Electrical appliances are not toys.** The appliance is not to be used by persons (including children) with reduced physical, sensory or mental capabilities, or lack of experience and knowledge, unless they are under supervision or have been given instruction.
- Children should be supervised to ensure that they do not play with the appliance.
- Cleaning shall not be performed by children without supervision.
- Any person who is involved with working on or breaking into a refrigerant circuit should hold a current valid certificate from an industry-accredited assessment authority, which authorizes their competence to handle refrigerants safely in accordance with an industry recognized assessment specification.
- Maintenance shall only be performed as recommended by the equipment manufacturer. Maintenance and repair requiring the assistance of other qualified personnel shall be carried out under the supervision of the person competent in the use of flammable refrigerants.
- Repair of the appliance may only be carried out by qualified personnel who are familiar with the risks involved and the relevant regulations. Inadequate repairs may cause serious hazards. For repair service, contact the service center in your country (see dometic.com/dealer).
- Always disconnect the power supply when working on the appliance.
- The appliance shall be stored in a room without continuously operating ignition sources such as open flames, an operating gas appliance or an operating electric heater.
- Do not pierce or burn the appliance.
- Be aware that refrigerants may not contain an odor.
- Do not use the appliance near flammable fluids or in closed rooms.
- Ensure that no combustible objects are stored or installed near the air outlet. A distance of at least 50 cm must be kept.
- Keep the ventilation openings clear of obstruction.
- Do not damage the refrigerant circuit.
- Under no circumstances shall potential sources of ignition be used in the searching for or detection of refrigerant leaks. A halide torch (or any other detector using a naked flame) shall not be used.
- The roof air conditioner shall be installed in a vehicle with a floor area larger than 4 m^2 .

CAUTION! Failure to obey these cautions could result in minor or moderate injury.

- Do not reach into air outlets or insert any foreign objects in the appliance.
- Do not undo the upper cover of the appliance in the event of a fire. Use approved extinguishing agents. Do not use water to extinguish fires.
- In the case that the appliance contains an ionizer, consult your physician if you have a medical condition. The ionizer can produce ozone (O3) in small quantities. If you suffer from lung disease, asthma, heart disease, respiratory disease, respiratory problems, or have an ozone sensitivity, consult your physician to determine whether the use of this device is safe for you.

NOTICE! Damage hazard

- Do not use means to accelerate the defrosting process or to clean, other than those recommended by the manufacturer.
- The appliance shall be stored so as to prevent mechanical damage from occurring.
- Do not make any alterations or conversions to the appliance.
- Never drive through automatic car washes when the appliance is mounted.
- If faults occur in the refrigerant circuit, the appliance must be checked and repaired by the manufacturer, its service agent or similarly qualified personnel in order to avoid a hazard.

4 Intended use

The roof air conditioner is only designed for installation on the roof of a caravan or recreational vehicle to provide cooling and heating.

The roof air conditioner is **not** suitable for trains, houses, and apartments. The roof air conditioner is **not** suitable for installation in construction machines, agricultural machines, or similar equipment.

This product is only suitable for the intended purpose and application in accordance with these instructions.

This manual provides information that is necessary for proper installation and/or operation of the product. Poor installation and/or improper operation or maintenance will result in unsatisfactory performance and a possible failure.

The manufacturer accepts no liability for any injury or damage to the product resulting from:

- Incorrect installation, assembly or connection, including excess voltage
- Incorrect maintenance or use of spare parts other than original spare parts provided by the manufacturer
- Alterations to the product without express permission from the manufacturer
- Use for purposes other than those described in this manual

Dometic reserves the right to change product appearance and product specifications.

5 Explanations of symbols on the appliance

Warning! Low burning velocity material.

Read operating manual.

Read service manual.

6 Technical limits and conditions

The roof air conditioner is intended for vehicles with the following roof thicknesses:

- 25 mm … 60 mm for a roof cutout of 400 mm × 400 mm
- 32 mm … 60 mm for a roof cutout of 360 mm × 360 mm

The roof top air conditioner will operate at ambient temperatures between – 2°C … 52°C. The roof air conditioner is designed to be installed within ± 10 ° of the horizontal plane.

7 Technical description

The roof air conditioner supplies the vehicle's interior with cool or warm air which is without dust and dirt and can be dehumidified.

The roof air conditioner can lower the temperature within the vehicle to a certain level that depends on the type of vehicle, the ambient temperature and the cooling capacity of the roof air conditioner. Below an outer temperature of 16°C the roof air conditioner does not cool anymore.

The roof air conditioner is operated with the following operating elements:

- Control panel
- Remote control (only some models, see List of models on page 6)

1

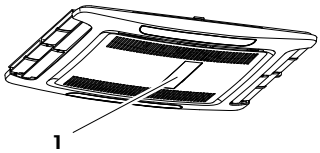

7.1 List of models

The following table shows which function applies to a specific model:

● Feature is available

○ Feature is upgradable

	FJX7333IHP
Automatic	●
Cooling	●
Heating	●
Ventilation	●
Dehumification	●
Air purifier	●
ADB light	●
External light	○
Timer	●
Sleep	●
Inverter	●

7.2 Control panel

2

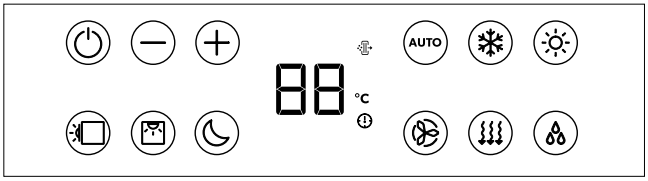

Symbol	Description
⏻	Switches the roof air conditioner on or to standby mode.

Symbol	Description
	Increases the currently displayed value.
	Reduces the currently displayed value.
	Pairs with bluetooth/WLAN when both buttons are pressed simultaneously.
	Switches the ambient lights in the roof top unit on or off.
	Switches the ambient lights in the air distribution box on or off.
	Activates the sleep function (only for models with sleep function).
	Displays the set temperature and indicates fan level when fan is adjusted.
	Indicates the Air Purifier mode is active.
°C	Indicates the temperature is displayed in degrees Celsius.
	Indicates the timer is set.
AUTO	Enables/disables the automatic mode (only for models with automatic mode).
	Enables/disables the cooling mode (only for models with cooling mode).
	Enables/disables the heating mode (only for models with heating mode).
	Adjusts the fan speed between Low, Med, High, Turbo or Auto (shown as 1, 2, 3, 4 or AA on the air distribution box display for a short time when changed).
	Enables/disables ventilation mode (only for models with ventilation mode). Circulates air without heating or cooling.
	Enables/disables dehumidification mode (only for models with dehumidification mode).

7.3 Remote control

3

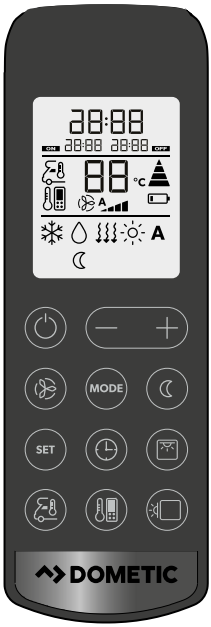

Control and display elements Fig. 3 on page 8:

Button	Description
—	**Display** Displays the following: • Time • Selected room temperature (target value) in °C • Actual room temperature • Air conditioning mode • Fan speed • Symbols for active additional functions • Battery status
⏻	Switches the roof air conditioner on or to stand-by mode.
+	Increases the currently displayed value.
−	Reduces the currently displayed value.
	Selects the fan speed (Selecting the fan speed manually on page 11).

Button	Description
MODE	Selects the air conditioning mode (only for models with automatic mode). The corresponding symbol is displayed.
	Activates the sleep function (only for models with sleep mode). The ☾ symbol is displayed.
SET	Confirms and saves settings.
	Sets the timer and the clock.
	Switches the ambient lights in the air distribution box on or off.
	Press once to display the current interior temperature. The symbol is displayed. Press twice to display the set temperature.
	Activates the I feel function. The symbol is displayed. Every 10 min the I feel function adjusts the target temperature to the actual temperature measured by the remote control.
	Switches the ambient lights in the roof top unit on or off.
	Displays that the remote control's batteries are empty. Replace the batteries (Replacing the remote control batteries on page 14).
	Displays that the remote control is transmitting values to the roof air conditioner.

7.4 Air conditioning modes

Air conditioning mode	Displayed symbol	Description
Automatic	A	You specify the temperature, and the roof air conditioner brings the interior to this temperature by heating or cooling and by controlling the necessary fan speed.
Cooling		You specify the temperature and fan settings, and the roof air conditioner cools the interior to this temperature.
Heating		You specify the temperature and fan settings, and the roof air conditioner heats the interior to this temperature. The fan will only start after 2 min (on Low speed) and then after around 5 min will go to the set fan speed (after the evaporator reaches temperature).
Ventilation		You specify the fan settings, and the roof air conditioner circulates air without heating or cooling.
Dehumidifying		The roof air conditioner removes moisture from the air without heating or cooling the interior thus decreasing the relative air humidity.

Air conditioning mode	Displayed symbol	Description
Air purifier		The roof air conditioner ionizes the air, thus collecting dust and particles including to viruses and bacteria out of the air.

7.5 Additional functions

Additional function	Display message	Description
Timer	ON 88:88	The roof air conditioner is switched on at the specified time.
	88:88 OFF	The roof air conditioner is switched off at the specified time.
	ON 88:88 88:88 OFF	The roof air conditioner is switched on and off at the specified times.
Sleep		The sleep function reduces the fan speed and the compressor speed to reduce the noise levels for comfortable sleeping.
I Feel		The remote control measures the room temperature and transmits this measurement to the roof air conditioner every 10 min . The roof air conditioner adapts the target value to this measurement.

8 Before initial use

Inspection before starting up

Before switching on the roof air conditioner, observe the following:

> Check whether the supply voltage corresponds to the values specified in Technical data on page 23.

> Ensure that both the air intake openings and the air nozzles are free. All ventilation grilles must always be kept free to ensure that the roof air conditioner is able to operate at maximum capacity.

Prepare the remote control

> Insert the batteries (Replacing the remote control batteries on page 14).

Set the time

> Set the current time (Setting the current time on page 12).

9 Operation

9.1 Tips for enhanced performance

To optimize the performance of the roof air conditioner, observe the following tips:

- Improve the heat insulation of your vehicle by sealing gaps and hanging reflective blinds or curtains on your windows.
- Select an appropriate temperature and fan speed.
- Align the air nozzles sensibly.
- Ensure that the air nozzles and air intake openings are not covered by cloths, paper, or other objects.

9.2 Basic notes on operation

The fixed-speed and inverter models have two operating modes:

Operating mode	Description
Standby	The roof air conditioner is ready for operation and can be switched on with the remote control. The ambient lights are available. The remote control is also in standby, but you can switch the remote control on independently from the roof air conditioner.
On	The roof air conditioner is conditioning the air in the interior.

9.3 Using the remote control

Consider the following hints when using the remote control:

- Point the remote control at the IR receiver of the control panel.
- The corresponding settings and values are directly transmitted to the roof air conditioner when you press a button.
- The roof air conditioner confirms the receipt of data with a beep sound.
- Values increase or decrease faster when you press and hold the + or – button.
- In the standby mode, the remote control display is inactive too. You can switch the remote control on to standby independently from the roof air conditioner.

> To switch only the remote control to or from standby, press the button while not pointing to the control panel's IR receiver.

9.4 Switching the roof air conditioner on and to standby

NOTE

- When the roof air conditioner is switched on, it resumes operation with the previously set values.
- The roof air conditioner can be switched off only by cutting the power supply.

> Press the button on the remote control or the button on the control panel to switch the roof air conditioner between on and standby modes.

9.5 Selecting the air conditioning mode

> Select the desired air conditioning mode using the MODE button (see Air conditioning modes on page 9).

✓ The roof air conditioner confirms the receipt of the values with a beep sound. The roof air conditioner is switched to the selected air conditioning mode.

9.6 Selecting the fan speed manually

In all modes, except for the Automatic (A) and Dehumidifying ( ) modes, the fan speed can be selected manually.

Display message	Description
	Low fan level
	Medium fan level
	High fan level.

Display message	Description
	Turbo fan level.
A	Automatic mode (the fan speed is adjusted based on the ambient temperature).

> Press the button of the remote control or the button of the control panel to select the desired fan speed.
v The roof air conditioner confirms the receipt of the values with a beep sound.

The new fan speed is set.

9.7 Setting the temperature

In the Automatic (A), Cooling ( ), Heating ( ), and Dehumidifying ( ) modes, you can specify a temperature between 16°C and 31°C.

> Use the + or – button on the remote control to set the desired temperature.
v The roof air conditioner confirms the receipt of the values with a high note. The temperature is set on the roof air conditioner.

9.8 Setting the current time

The remote control needs the current time in order to program the timer. The time is shown on the remote control display.

1. Press and hold the button in order to get into the mode for setting the time.
v The time flashes on the remote control display.
2. Use the **+** or **–** button to set the current time. Press and hold the **+** or **–** button longer than 2 s to increase or decrease the time quicker.
3. Press the **SET** button to confirm the time.

9.9 Setting the timer

The timer function allows you to set a specific time period for air conditioning. You can specify the switch-on time, the switch-to-standby time, or both values.

The timer function is set via remote control.

NOTE The remote control will return to its initial mode if no button is pressed on the remote control for 15 s during timer setup.

Setting the switch-on timer

1. Select the desired air conditioning mode and set all required values (e.g., temperature).
2. If necessary, switch the roof air conditioner to standby.

   The switch-on timer can only be set when the roof air conditioner is in **standby** mode.
3. Press the button once.
v The ON 88:88 symbol flashes on the remote control display.
4. Use the + or – button to set the time when the roof air conditioner shall be switched on.
5. Press the button.

The switch-on timer is set. The roof air conditioner will be switched on with the selected settings at the specified time.

Setting the switch-to-standby timer

1. If necessary, switch the roof air conditioner on.

   The switch-to-standby timer can only be set when the roof air conditioner is switched **on**.
2. Press the button twice.
- The 28:88 OFF symbol flashes on the remote control display.
3. Use the + or – button to set the time when the roof air conditioner shall be switched to standby.
4. Press the SET button.

   The switch-to-standby timer is set. The roof air conditioner will be switched to standby at the specified time.

Setting the switch-on timer and the switch-to-standby timer

1. Select the desired air conditioning mode and all required values (for example the temperature).
2. Press the button three times.
- The ON 28:88 28:88 OFF symbol is shown on the remote control display. The ON symbol flashes.
3. Use the + or – button to set the time when the roof air conditioner shall be switched on.
4. Press the button.
- The **OFF** symbol flashes.
5. Use the + or – button to set the time when the roof air conditioner shall be switched to standby.
6. Press the SET button.
- The switch-on and switch-to-standby timers are set. The roof air conditioner will be operating for the specified time period.

Cancelling the timer

> To **cancel** preset timer, press the button once.
- The ON 28:88 28:88 OFF symbols disappear. Preset values are discarded.

9.10 Setting the sleep function

The sleep function is only available in Cooling (❄) or Heating (☼) modes.

The sleep function limits the fan speed to a lower level to reduce the noise levels for easier sleeping.

Only for inverter models: The sleep function additionally limits the compressor speed.

> To activate the sleep function proceed as follows:

a) Set the required temperature (Setting the temperature on page 12).

b) Press the button on the remote control or the button on the control panel.

- The symbol ☾ appears in the remote control display. The sleep function is activated.

> To deactivate the sleep function, press the or the MODE button on the remote control or the button on the control panel.

- The symbol ☾ disappears in the remote control display. The sleep function is deactivated.

9.11 Activating the I feel function

When this function is active, the remote control measures the room temperature and transmits this measurement to the roof air conditioner every 10 minutes. The roof air conditioner adapts the target value to this measurement. The I feel function is only active when the temperature range is between +18 °C and +29 °C.

The remote control should not be kept in a part of the room that is considerably warmer or colder than the average room temperature. For example, don`t leave the remote control in the sun or in front of the roof air conditioner.

When the temperature rises above +29 °C or falls below +18 °C, the I feel function is deactivated. The symbol flashes three times in the display and then turns off.

1. Press the button.
   ✓ The I feel function is activated.

   The symbol appears in the display.
2. Position the remote control so that it points at the IR receiver on the control panel. Otherwise, the values cannot be transmitted to the roof air conditioner.

9.12 Operating the ambient lights

WARNING! Risk of injury
By law it is forbidden to use the external lights when driving the vehicle.

The button on the remote control is active even if the remote control is switched off.

Only for models with ADB light:

> To switch the internal lights on or off, press the button on the remote control or on the control panel.

✓ The symbol flashes once in the display of the remote control when the internal lights are switched **on**.

> To dim the internal lights, proceed as follows:

a) Press the button on the remote control or on the control panel for 3 s .

b) When pressing the button on the remote control, press the button to dim the internal light between 50 % and 100 % .

c) When pressing the button on the control panel, the internal light's brightness cycles between 50 % and 100 % . Release the button when the the desired brightness is reached.

Only for inverter models:

> To switch the external lights on or off, press the button on the control panel.

9.13 Replacing the remote control batteries

NOTE The remote control display may still be bright even if the batteries are running low. Replace the batteries when the remote control indicates low batteries.

> Replace the batteries as shown.

v The display shows all symbols for 5 s .

Protect the environment! Do not dispose of any batteries with general household waste. Return defective or used batteries to your retailer or dispose of them at collection points.

9.14 Regulating air supply within the vehicle

The air flow can be adjusted along the ceiling or towards the floor.

> Turn the slats in the air nozzles independently in the required directions.

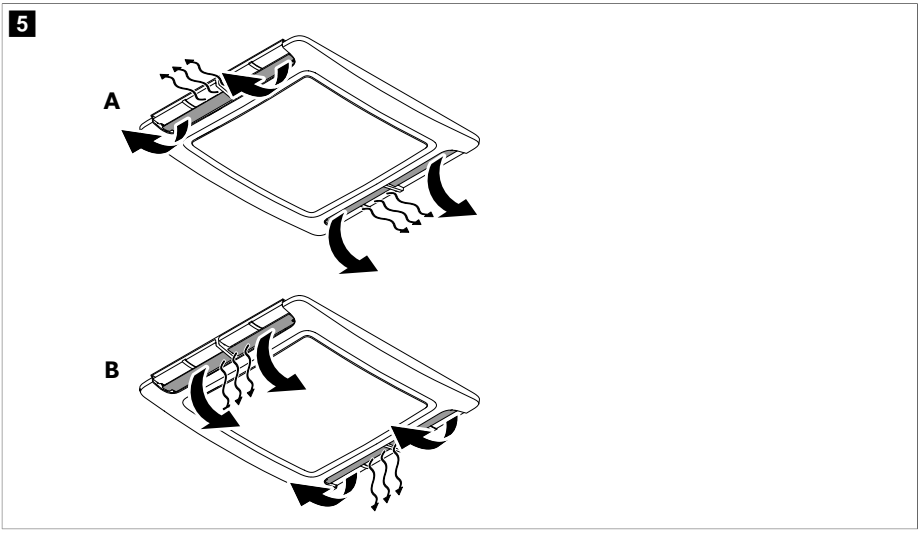

10 Cleaning the roof air conditioner

NOTICE! Damage hazard

> Do not use means to accelerate the defrosting process or to clean, other than those recommended by the manufacturer.

> Do not clean the roof air conditioner with a high-pressure cleaner. Exposure to water can damage the roof air conditioner.

> Do not use sharp or hard objects or cleaning agents for cleaning as these may damage the roof air conditioner.

> Do not use petrol, diesel, or solvents.

1. Regularly remove leaves and other dirt from the air intake and the ventilation grilles of the roof air conditioner. Do not damage the ventilation grilles in the process.

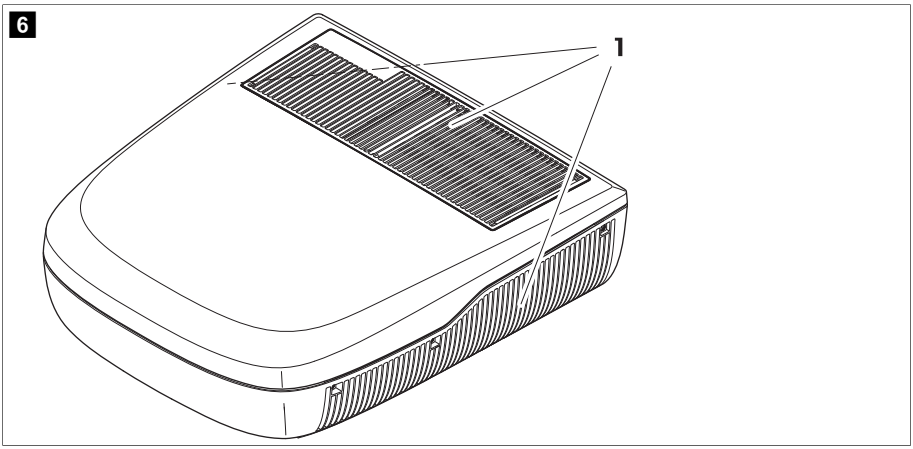

2. Occasionally clean the housings of the roof top unit and the air distribution box with a damp cloth. Use only water with a gentle cleaning agent.
3. **Only for models with remote control:** Occasionally clean the remote control with a slightly damp cloth. Clean the display with a cleaning cloth for glasses.
4. **Only for models with air distribution box:** Occasionally clean the air distribution box display with a mild solution of warm soapy water. The display screen is acrylic and can be damaged by some common household chemicals such as chemical cleaners, window cleaners, alcohol, certain tensides, organic solvents, and softeners.

11 Maintenance

WARNING! Risk of injury
Any other maintenance work in addition to the described subjects here may only be carried out by qualified personnel who are familiar with the risks involved when handling refrigerant and air conditioning systems as well as the relevant regulations.

Interval	Inspection/maintenance
Regularly	Check whether the condensation water drainage channels (**1**) at the sides of the roof air conditioner are clear and the condensation water is able to escape. 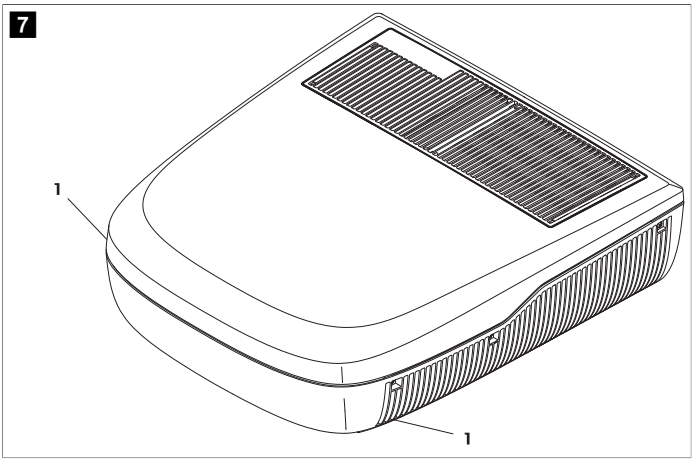

Interval	Inspection/maintenance
Regularly	Clean the filter of the air distribution box.

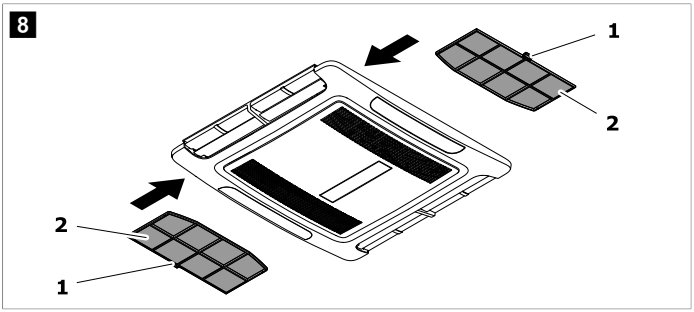

1. Insert a flat screwdriver into the handle (**1** in Fig. 8 on page 19) to pull the filters (**2** in Fig. 8 on page 19) slightly out.
2. Remove the filters by hand.
3. Clean the filters with a detergent solution and let them dry.
4. Slide the dry filters back (Fig. 8 on page 19). If the filter is bent, remove the ventilation grille (Fig. 9 on page 19) and press the front of the filter upwards while sliding it back into place (Fig. 10 on page 19).

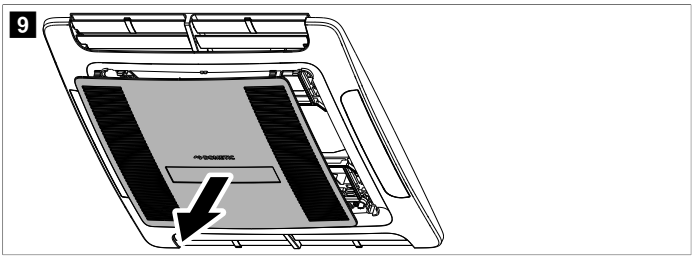

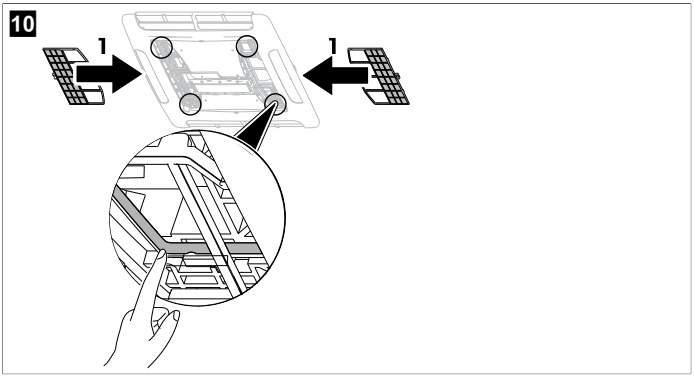

Interval	Inspection/maintenance
Once per year	• Have the heat exchanger of the roof air conditioner serviced by specialist company. • Check the seals between the roof air conditioner and the vehicle roof for cracks and other damage. • Check whether the fastening bolts are tightened to the correct torque (2.5 Nm ± 0.3 Nm) and adjust if necessary.

12 Troubleshooting

Problem	Possible cause	Suggested remedy
Not cooling well	The roof air conditioner is not set to cooling.	Set the roof air conditioner to cooling.
	The ambient temperature is above 52°C.	The roof air conditioner is only designed for ambient temperatures of up to 52°C.
	The temperature set is higher than the room temperature.	Select a lower temperature.
	The ambient temperature is below 16°C.	The roof air conditioner is designed for cooling only at ambient temperatures above 16°C.
	One of the temperature sensors is defective.	Contact an authorized service agent or Dometic.
	The evaporator fan is damaged.	Contact an authorized service agent or Dometic.
	The condenser fan is damaged.	Contact an authorized service agent or Dometic.
Only for models with heating mode: Not heating well	The roof air conditioner is not set to heating.	Set the roof air conditioner to heating.
	The ambient temperature is below – 2°C.	The roof air conditioner is designed for ambient temperatures above – 2°C.
	The temperature set is lower than the room temperature.	Select a higher temperature.
	One of the temperature sensors is defective.	Contact an authorized service agent or Dometic.
	The evaporator fan is damaged.	Contact an authorized service agent or Dometic.
Low Air output	The air intake openings are blocked or obstructed.	Remove any leaves and other dirt from the ventilation grilles of the roof air conditioner.
	The fan is defective.	Contact an authorized service agent or Dometic.
Water enters the vehicle.	The condensation water drainage openings are clogged up.	Clean the water drainage openings from condensation water.
	The seals are damaged.	Contact an authorized service agent or Dometic.

Problem	Possible cause	Suggested remedy
The roof air conditioner does not switch on.	No power supply connected.	Check the power supply.
	The voltage is too low (< 45 V).	The power supply of the battery is not sufficient.
	The voltage converter is defective.	Contact an authorized service agent or Dometic.
	One of the temperature sensors is defective.	Contact an authorized service agent or Dometic.
	The electrical fuse of the power supply is too low.	> The battery voltage is overloaded. Check the battery. > If applicable, unwind the power cable drum. > Reduce the active electrical consumers in the vehicle. > The electrical protection of the battery is not sufficient. Check the electrical protection of the vehicle.
The roof air conditioner does not switch off.	One of the temperature sensors is defective.	Contact an authorized service agent or Dometic.
	The electrical fuse of the power supply is too low.	Contact an authorized service agent or Dometic.
Only for fixed-speed and inverter models: The roof air conditioner constantly switches itself off.	The icing sensor has tripped.	The outer temperature is too low or all air nozzles are closed.
The display shows: P0	Over temperature or over current on IPM module	Contact an authorized service agent or Dometic.
The display shows: P1	Under voltage protection	Check with the campsite management if the voltage at the campsite is sufficient.
The display shows: P2	Unit DC over-current protection	Contact an authorized service agent or Dometic.
The display shows: P3	Overvoltage protection	Check with the campsite management if the voltage at the campsite is sufficient.
The display shows: P4	Discharge tube overheat protection	Contact an authorized service agent or Dometic.
The display shows: P5	Evaporator coil protection (cooling mode)	Contact an authorized service agent or Dometic.
The display shows: P6	Condenser coil protection (cooling mode)	Contact an authorized service agent or Dometic.
The display shows: P7	Evaporator coil protection (heating mode)	Contact an authorized service agent or Dometic.
The display shows: P8	Ambient outdoor temperature too high (heating mode) or too low (cooling mode) protection	Contact an authorized service agent or Dometic.

Problem	Possible cause	Suggested remedy
The display shows: P9	Compressor drive abnormal or compressor does not start	Contact an authorized service agent or Dometic.
The display shows: E0	Communication failure	Contact an authorized service agent or Dometic.
The display shows: E1	Room temperature sensor fault	Contact an authorized service agent or Dometic.
The display shows: E2	Evaporator coil temperature sensor fault	Contact an authorized service agent or Dometic.
The display shows: E3	Condenser coil temperature sensor fault	Contact an authorized service agent or Dometic.
The display shows: E6	Internal motor failure	Contact an authorized service agent or Dometic.
The display shows: E7	Outdoor temperature sensor failure	Contact an authorized service agent or Dometic.
The display shows: E8	Discharge tube temperature sensor failure	Contact an authorized service agent or Dometic.
The display shows: E9	Compressor drive or IPM module fault	Check with the campsite management if the voltage at the campsite is sufficient. Contact an authorized service agent or Dometic.
The display shows: EA	Current sensor fault	Contact an authorized service agent or Dometic.
The display shows: EC	CAN commumication failure(self inspection)	Contact an authorized service agent or Dometic.
The display shows: EE	Outdoor EEPROM fault	Contact an authorized service agent or Dometic.
The display shows: EF	External motor failure	Contact an authorized service agent or Dometic.
The display shows: EL	LIN-BUS/CI-BUS communication failure	Contact an authorized service agent or Dometic.
The display shows: EU	Voltage sensor failure	Contact an authorized service agent or Dometic.

13 Disposal

Place the packaging material in the appropriate recycling waste bins, wherever possible. Consult a local recycling center or specialist dealer for details about how to dispose of the product in accordance with the applicable disposal regulations.

Protect the environment! Do not dispose of any batteries with general household waste. Return defective or used batteries to your retailer or dispose of them at collection points.

14 Warranty

If the product does not work as it should, please contact your retailer or the manufacturer's branch in your country (see dometic.com/dealer). The warranty applicable to your product is 3 year(s).

For repair and warranty processing, please include the following documents when you send in the device:

- A copy of the receipt with purchasing date
- A reason for the claim or description of the fault

Note that self-repair or nonprofessional repair can have safety consequences and might void the warranty.

Our goods come with guarantees that cannot be excluded under the Australian Consumer Law. You are entitled to a replacement or refund for a major failure and for compensation for any other reasonably foreseeable loss or damage. You are also entitled to have the goods repaired or replaced if the goods fail to be of acceptable quality and the failure does not amount to a major failure.

This warranty policy is subject to the conditions and guarantees which are mandatory as implied by the Consumer Guarantees Act 1993(NZ).

15 Technical data

11

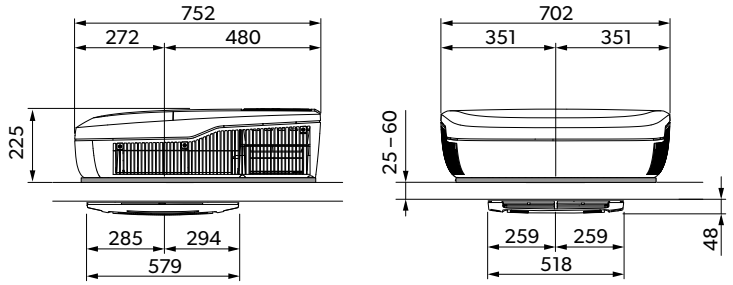

This product contains fluorinated greenhouse gases.

The cooling unit is hermetically sealed.

	FreshJet FJX7333IHP
Cooling capacity based on ISO 5151	2523 W
Heating capacity based on ISO 5151	2218 W
Rated DC input voltage	48 V
DC voltage range	45 … 51 V
Rated cooling current	< 28.6 A
Rated heating current	< 20.3 A
Required fuse	50 A
Operating temperature range	– 2°C … 52°C
Refrigerant	R32

	FreshJet FJX7333IHP
Refrigerant quantity	420 g
CO_2 equivalent	0.284 t
Global warming potential (GWP)	675
Protection class (roof top unit)	IPX4
Noise level (highest fan setting)	< 60 dB(A)
Dimensions L x W x H	Fig. 11 on page 23
Weight (roof top unit with air distribution box)	< 35 kg

DOMETIC

dometic.com

YOUR LOCAL DEALER	YOUR LOCAL SUPPORT	YOUR LOCAL SALES OFFICE
dometic.com/dealer	**dometic.com/contact**	**dometic.com/sales-offices**

A complete list of Dometic companies, which comprise the Dometic Group, can be found in the public filings of:
DOMETIC GROUP AB • Hemvärnsgatan 15 • SE-17154 Solna • Sweden

4445104418 4450035353 54-906-MAM01U 2025-03-10