Dometic

INSTALLATION & OPERATING INSTRUCTIONS

RA/RM-2D

CE

RM4601

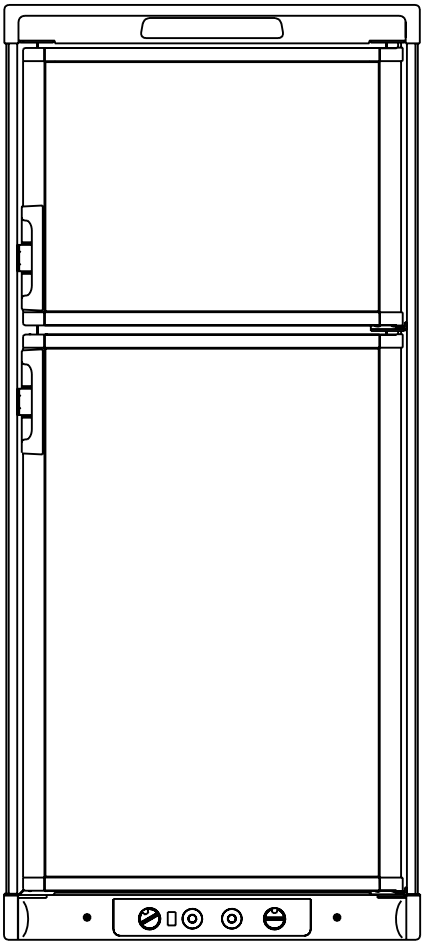

FOR YOUR SAFETY

If you smell gas:

1. **Open windows and door.**
2. **Don't touch electrical switches.**
3. **Extinguish any open flame.**
4. **Immediately call your gas supplier.**

FOR YOUR SAFETY

Do not store or use gasoline or other flammable vapors and liquids in the vicinity of this or any other appliance.

⚠ WARNING

Improper installation, adjustment, alteration, service or maintenance can cause injury or property damage. Refer to this manual. For assistance or additional information consult a qualified installer, service agency or the gas supplier.

822708907

CONTENTS

OPERATING INSTRUCTIONS 4

CONTROLS 4
TURNING ON THE REFRIGERATOR 4
TURNING OFF THE REFRIGERATOR 4
REGULATING THE TEMPERATURE 4
TRAVEL CATCH 4
FOOD STORAGE 5
ICE MAKING 5
DEFROSTING 5
CLEANING THE REFRIGERATOR 5
AIRING POSITION CARD 5
IF THE REFRIGERATOR FAILS TO WORK 6
MAINTENANCE 6
SOME USEFUL HINTS 6
SERVICE AND SPARE PARTS 6

INSTALLATION INSTRUCTIONS 6

GENERAL INFORMATION 6
TECHNICAL DATA 6
INSTALLATION/BUILDING-IN 7
VENTILATION OF THE UNIT 8
LP GAS CONNECTION 8
ELECTRICAL CONNECTION 9
REPOSITIONING THE HINGES 9
MOUNTING DOOR PANEL 9
APPENDIX A - WIRING DIAGRAM 10

SYMBOLS

The following symbols are used throughout the manual:

⚠ WARNING — Indicates a potentially hazardous situation, which, if not avoided, could result in death or serious injury.

⚠ CAUTION — Indicates a potentially hazardous situation, which, if not avoided, may result in minor or moderate injury.

CAUTION — Used without the safety alert symbol indicates, a potentially hazardous situation which, if not avoided may result in property damage.

☞ — Step-by-step instructions

INTRODUCTION

We are pleased that you have chosen this refrigerator and hope you will derive much satisfaction from using it,. The refrigerator is designed for storage of foods, storage of frozen foods, making ice and is ideal for installation in caravans or campers.

The installation and servicing should be carried out by an authorised/qualified person.

It is important to read through these instructions carefully before using the refrigerator. Make sure to retain this manual for future reference. To ensure good refrigeration and economical operation, the refrigerator must be installed and used as described in these instructions.

TRANSIT DAMAGE

Inspect the refrigerator for damage. Transit damage must be reported to whoever is responsible for delivery not later than seven days after the refrigerator was delivered.

DATA PLATE

Check the data plate, inside the refrigerator, to ensure that you have received the right model and that it is suitable for the available gas supply and pressure.

The right test point gas pressure is ..... 2.72 kPa
The right voltage is ..... 230 - 240 volts
The right gas consumption is ..... 1.7 MJ/h

The data plate contains e. g. the following details:

Model designation RM4601

Product number .....

Serial number .....

Voltage ..... volts

Gas pressure ..... kPa

Since these details will be needed if you have to contact service personnel, it is a good idea to make a note of them here.

OPERATING INSTRUCTIONS

CONTROLS

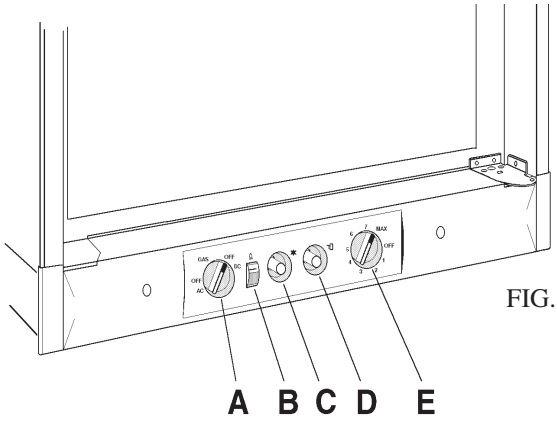

FIG. 1

The refrigerator can be run on 230-240 V, 12 V or LP gas. Changing between these modes of operation is carried out by means of the control buttons positioned as shown in Fig. 1.

The energy selector (A) can be set at either “AC” (230-240 V), “DC” (12 V), “GAS” (LP gas) or “OFF”.

A flame indicator (B) at the control panel shows if the gas flame is lit. The gas is lit when the red indicator is in the green field.

A manual piezo-electric igniter is used. When the button (C) is pushed, sparks are generated at the burner.

The refrigerator is fitted with a safety device that automatically shuts off the supply of gas if the flame goes out. The safety device can be operated manually by pressing the button (D).

The refrigerator temperature is controlled by a thermostat (E) when the refrigerator runs on 230-240 V and LP gas. Please note that the thermostat has no “off” position when the refrigerator runs on LP gas.

TURNING ON THE REFRIGERATOR

⚠ WARNING

Whilst mobile:
- **Do not operate the refrigerator on LP gas.**
- **Turn off the gas bottle.**

LP GAS OPERATION

After initial installation, servicing, or changing gas cylinders etc., the gas line is likely to be filled with air. You may have to repeat the lighting procedure several times to purge the air out of the gas lines.

To start gas operation:

1. Open the shut off valve of the gas bottle. Check that there is enough gas. Open any on-board shut-off valve.
2. Set the thermostat knob (E) to the highest setting.
3. Turn the energy selector (A) to position “GAS”.
4. Press button (D) all the way in and hold, press button (C) for the piezo igniter several times to light the burner. This can be observed on the flame indicator (B), on the refrigerator. When the flame is on, the red indicator is in the green field.
5. After the gas is lit keep button (D) pressed for 10 seconds. Release the button (D) and check that the RED indicator is in the GREEN field. If the burner goes out, repeat the lighting procedure.
6. To shut off the refrigerator, turn knob (A) to “OFF” position.

230-240 V OPERATION

Before operating the refrigerator, check that the voltage stated on the data plate is the same as the main voltage in use.

1. Turn thermostat knob (E) to its highest (coldest) position.
2. Set energy selector (A) to position “AC”.
3. To shut off the refrigerator, turn knob (A) to “OFF” position.

12 V OPERATION

Only operate your refrigerator on 12 V when the engine of the vehicle is running - otherwise your battery will soon be discharged.

1. Set the energy selector (A) to position “DC”.
2. Note! There is no thermostat function on 12 V operation, the refrigerator works continuously.
3. To shut off the refrigerator, turn the knob (A) to “OFF” position.

TURNING OFF THE REFRIGERATOR

To turn off the refrigerator, turn knob (A) to “OFF” position.

If the refrigerator is not to be used for some time:

1. Turn knob (A) to “OFF” position.
2. Shut off any on-board valve in the gas line to the refrigerator.
3. Empty the refrigerator.
4. Defrost and clean it as described in sections “DEFROSTING” and “CLEANING THE REFRIGERATOR”.
5. Leave the doors ajar.

REGULATING THE TEMPERATURE

The position number refers to fig.1.

It will take a few hours for the refrigerator to reach normal operating temperature. So we suggest you start it well in advance of a trip and if possible store it with precooled foodstuffs.

On 230-240 V operation and LP gas operation the refrigerator is controlled by a thermostat and the thermostat knob (E) should be set at 3-5. If a lower (colder) temperature is desired set the thermostat to a higher figure.

On 12 V operation the refrigerator works continuously.

TRAVEL CATCH

The travel catch is integrated in the handle. Make sure that the travel catch is engaged when the caravan is on the move.

FOOD STORAGE

⚠ WARNING

Never keep items in the refrigerator that might give off flammable gases.

Always keep food in closed containers. Never put hot food in the refrigerator; allow it to cool first.

The frozen food compartment is intended for the storage of frozen food and for making ice. It is not suitable for freezing items of food.

Most kinds of frozen food can be stored in the frozen food compartment for about a month. This period of time may vary, however, and it is important to follow the instructions on the individual packages.

ICE MAKING

It is practical to make ice during the night - then the refrigerator is less demanded and the cooling unit has more reserves. Fill the ice tray to just below the brim with drinking water and place it on the freezer shelf.

It is possible to make ice faster by turning the thermostat knob temporarily to its highest value but do not forget to turn it back to its regular setting afterwards as the refrigerator might otherwise become too cold.

DEFROSTING

Frost will gradually accumulate on the refrigerating surfaces. It must not be allowed to grow too thick as it acts as an insulator and adversely affects refrigerator performance.

Check the formation of frost regularly every week and when it gets about 3 mm thick, defrost the refrigerator.

To defrost the refrigerator, turn it off and remove the ice trays and the food item. Leave the cabinet and freezer doors open. Note! Do not try to accelerate defrosting by using any kind of heating appliance, as this might damage the plastic surfaces of the refrigerator. Neither should any sharp objects be used to scrape off the ice.
Defrost water runs from the drip tray through a plastic drain water hose to the outside of the vehicle. Defrost water in the freezer compartment should be mopped up with a cloth. When the ice has melted, wipe the refrigerator dry and restart it. Place the food items back inside but wait until the refrigerator is cold before making ice cubes.

CLEANING THE REFRIGERATOR

Clean the inside of the refrigerator regularly to keep it fresh and hygienic. Soak a cloth in a solution consisting of a teaspoon of bicarbonate of soda to half a litre of warm water. Wring out the cloth and use it to clean the interior of the refrigerator and its fittings.

Never use detergents, scouring powder, strongly scented products or wax polish to clean the interior of the refrigerator as they may damage the surfaces and leave a strong odour.

The exterior of the refrigerator should be wiped clean now and then, using a damp cloth and a small quantity of detergent. But not the door gasket, which should only be cleaned with soap and water and then thoroughly dried.

The cooling unit behind the refrigerator should be cleaned with a brush from time to time, but make sure that the refrigerator is switched off when doing this.

AIRING POSITION CARD

Use the **Airing Position Card** to keep the doors ajar if the refrigerator will not be in use for an extended period of time or put in storage.

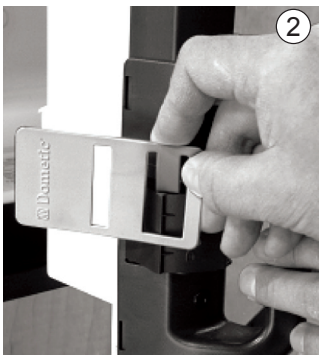

IF THE REFRIGERATOR FAILS TO WORK

Check the following points before calling a service technician:

- The "STARTING THE REFRIGERATOR" instructions have been followed.
- The refrigerator is level.
- If it is possible to start the refrigerator on any of the connected sources of energy.
- If the refrigerator fails to work on gas, check:
  - That the gas bottle is not empty.
  - That all LP-gas valves are open.
- If the refrigerator fails to work on 12 V, check:
  - That the 12 V supply is connected to the refrigerator.
  - That the fuse on the 12 V supply is intact.
  - That the battery is not run down.
- If the refrigerator fails to work on 230-240 V, check:
  - That the 230-240 V supply is connected to the refrigerator.
  - That the fuse is intact.

If the refrigerator is not cooling sufficiently, the reason may be:

- Inadequate ventilation of the cooling unit due to the intake and/or exhaust air vents being partly or completely blocked.
- The evaporator is frosted up.
- The thermostat setting is incorrect.
- Gas pressure is incorrect - please check the pressure regulator on the gas container.
- The refrigerator is not level.
- Too much food is loaded at one time.
- The door is not properly closed or the magnetic sealing strip is defective.

If the refrigerator still does not work properly, call a service technician.

⚠ WARNING

The sealed cooling system must not be opened, since it contains corroding chemicals under high pressure.

MAINTENANCE

Always turn to a qualified service technician who is familiar with LP gas systems and refrigerator. We recommend that a service technician check the refrigerator once a year.

- Check all connections in the LP gas system for gas leaks. Connections can be tested for leaks using a soap solution. **Do not use a naked flame!** If there is any suspicion of damage, call for a service technician.
- The ventilation openings are unobstructed.
- The Instruction Manual is available.
- Check that the burner is clean and free from combustible material.

SOME USEFUL HINTS

Make sure that:

- The refrigerator is not operating on 12 V when the vehicle is parked; otherwise you will drain the car battery in a short time.
- Defrosting is carried out periodically.
- The refrigerator is clean and dry with the door left open when it is not to be used for some time.
- Liquids or items with a strong odour are well packed.
- The ventilation openings are unobstructed.
- The door is secured by means of the travel catch when the caravan is on the move.

SERVICE AND SPARE PARTS

Service and spare parts are obtainable from your dealer or Dometic - consult the telephone directory.

INSTALLATION INSTRUCTIONS

GENERAL INFORMATION

This appliance must be installed by an authorised person and conform to all relevant local authorities.
The appliance shall be installed in accordance with the manufacturers installation instructions, local gas fitting regulations, municipal building codes, electrical wiring regulations, AS5601 "Gas Installations" and any other statutory regulations.
The packaging of this appliance is design to withstand the transportation from the factory to the point where it will be installed in the recreational vehicle. Before starting to install the appliance, please, make sure all parts of the packaging have been removed, so there will not be anything left that may come into contact with heat parts of the appliance or obstruct the combustion exhaust gases or the air movement around the cooling unit.

TECHNICAL DATA

Overall dimensions, refrigerator

Height (incl. controls)	1427 mm
Width	632 mm
Depth (incl. handle)	668 mm

Recess dimensions

Height	1415 mm
Width	607 mm
Depth	620 mm

Capacity

Gross	186 litres
Net	171 litres
Frozen food compartment	47 litres

Weight (without packaging)	61.5 kg

Electrical data

Input	230-240 volt	325 watt
	12 volt	275 watt

Energy consumption (in 24h)	4.6 kWh

LP gas data

Input, max	1.7 MJ/h
Energy consumption (in 24h)	440 g

Cooling medium: Ammonia

Sodium chromate is used for corrosion protection (less than 2 weight % of the coolant).

INSTALLATION/BUILDING-IN

The refrigerator is intended for installation in a caravan or camper van, and the description relates to this application.

The refrigerator must not be exposed to radiated heat from hot objects.

It is not a good practice to install the refrigerator so that the vent openings are covered by the vehicle's entrance door when this is set open. This would reduce the ventilation airflow to the cooling unit and reduce refrigeration performance.

THE ENCLOSURE

The refrigerator must be installed in a substantial enclosure and must be level, the dimensions are shown in "TECHNICAL DATA".

The bottom of the enclosure must be horizontal and even so that the refrigerator can be easily pushed into place. It must be sturdy enough to carry the weight of the refrigerator.

Make sure that there is a complete seal between the front frame of the refrigerator and top, sides and bottom of the enclosure.
A length of sealing strip is applied to the rear surface of the front frame for this purpose, see fig. 2.

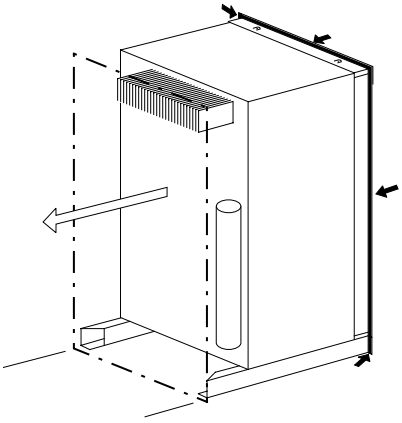

FIG. 2

A wood strip must be in place across the upper opening of the enclosure. The top frame of the refrigerator will be anchored to the wood strip with screws.

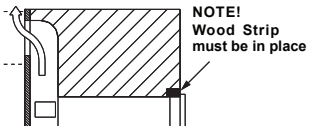

Push the refrigerator into the recess until the sealing strip on the flange seals against the front of the recess, so that the cooling unit is completely sealed off against the interior of the caravan. **Note!** Be careful not to damage the sealing strip when the refrigerator is put in place.

SECURING THE REFRIGERATOR

After the refrigerator is put in place, (insuring a combustion seal at the front frame), the refrigerator is to be secured in the enclosure with six screws.

Failure to follow the sequence in securing the refrigerator in the enclosure can cause leakage between the frame and cabinet. Any space between the counter, storage area or ceiling and top of the refrigerator greater than 40 mm should be blocked. The heat produced at the rear of the refrigerator will become trapped in this space, making the top of the refrigerator hot and reduce the efficiency of the refrigerator.

The six screws have to be installed in the following order:

1. Two screws installed through the front base.
   a) Secure the refrigerator to the floor with two screws: One screw through the hinge and into the floor, and on the opposite side one screw through the front base, see fig. 3.

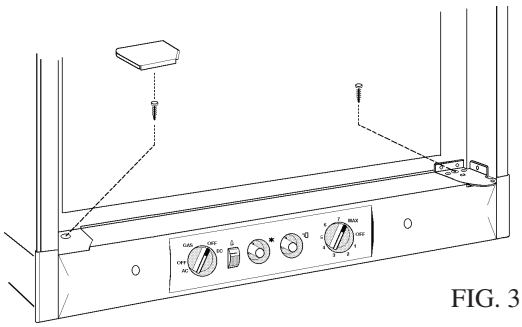

FIG. 3

   b) A cover plate (shipped as a loose part) is to be attached after the refrigerator is secured in the enclosure
2. Two screws installed in the top frame.
   a) The top decoration panel must be removed from the refrigerator before the screws can be installed. Open the upper door and gently push the tabs out of the hole in the hinge (both sides) with a flat blade screwdriver.
   b) Carefully tilt the top decoration panel and lift up to remove from top frame, see fig. 4.

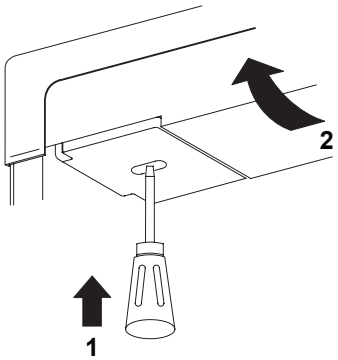

FIG. 4

   c) Install the two screws in the top frame, the holes are accessible from underneath.
   d) Seal the opening for the screws with aluminium tape.
   e) Replace the top decoration panel. Make sure the tabs snap back into the holes in the hinge plate.
3. Two screws installed in the rear base, see fig. 5.

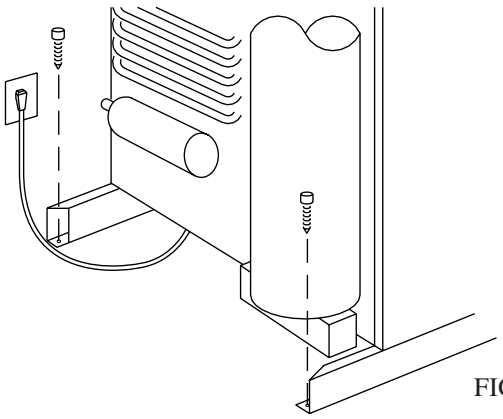

FIG. 5

VENTILATION OF THE UNIT

VENTILATION HEIGHTS

MINIMUM VENTILATION HEIGHTS IN MM	
Installation with upper and lower side vent	Installation with roof vent and lower side vent
1760	1515

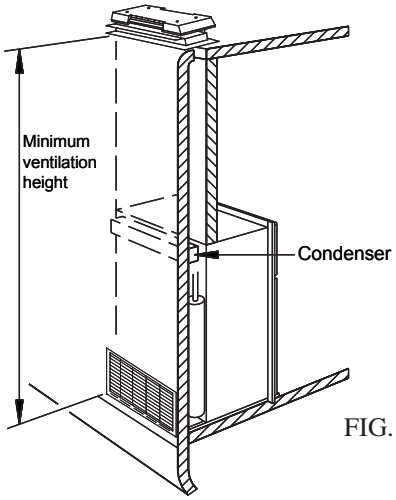

FIG. 6

At extreme ambient temperatures the refrigeration unit will only perform adequately when properly ventilated.

VENTILATION GRILLES

We recommend fitting the Dometic ventilation system, which is specially developed by Dometic for this purpose. The Dometic ventilation grilles permit inspection and small repairs to be carried out without the necessity of removing the refrigerator from the recess.
If there is no outer grille at floor level where leaking gas can escape, a 40 mm hole to the outside should be made in the floor of the recess to drain any unburned gas to the outside. Fit the hole with wire mesh and an angled plate to protect it from stones, mud etc.

SIDE VENTILATION

The refrigerator unit is ventilated via two openings in the wall of the motorhome. Fresh air enters through the lower opening and warm air is discharged through the upper one.

The lower opening should be located at floor level (to allow any leaking gas to escape to the outside). The upper ventilation opening should be located above the condenser, as high as possible, to ensure good ventilation. We recommend the ventilation kit A1625.

ROOF VENTILATION

The ventilation of the cooling unit can also be done via one opening in the wall of the motorhome and one on the roof for the roof vent.

Fresh air enters through the lower opening and warm air is discharged through the roof vent. The lower opening should be located at floor level (to allow any leaking gas to escape to the outside). We recommend the ventilation kit A1625 together with the roof vent R500.

REMOVAL OF FLUE GASES

The ventilation passage at the rear of the recess, between the outer wall of the vehicle and the refrigerator must be sealed off against the living space, so cold draughts are excluded (winter camping) and **no flue gases can penetrate into the motorhome**.

The flue gases are dispersed from the ventilation passage using the Dometic flueing system. The top, bottom and sides of the ventilation passage should be insulated to prevent condensation and cold draughts. The ventillation passage walls must be constructed of a non combustable material.

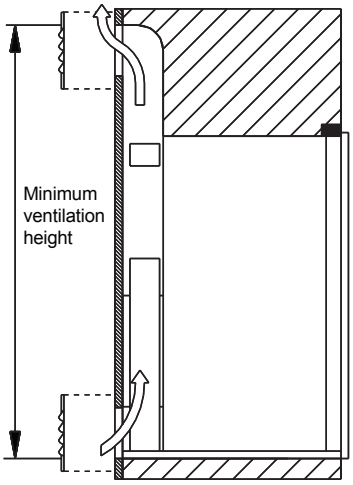

FIG. 7

LP GAS CONNECTION

The refrigerator is designed for operation on LP gas, the test point pressure must be 2.72 kPa for Propane. Check that this is stated on the data plate.

The refrigerator is not designed for operation on town gas or natural gas.

CAUTION

Check that the gas supplied to the refrigerator is at the correct pressure. See the reducing valve on the LP gas container.

The gas installation and servicing must be carried out by an authorised person and conform to all relevant local authorities.

The gas supply system must incorporate an approved gas pressure regulator to maintain a supply pressure of 2.72 kPa.

The supply pipe should preferable be of copper. If any other material is used, it must be of a type approved for use with continuously operating bottled-gas appliances and have threaded connections throughout. All connectors etc. should be of a type specifically designed for the type and diameter of the connection pipe used, and screwed joints should be sealed with a joining compound approved for use with bottled-gas.

The gas supply pipe should be connected to the gas inlet connection at the rear of the refrigerator by means of a suitable threaded coupling. The connection nipple is furnished with an ISO 7/1 - Rp 1/8 internal pipe thread connection. In making the connection to the refrigerator, a union gas cock of an approved type bottled gas must be incorporated in the supply line in a position that is readily accessible to the user. For eventual servicing purposes, the union should be on the outlet side of the cock and the pipework should be positioned so as not to prevent the refrigerator from being readily withdrawn. All completed connections should be checked for leaks with soapy water.

⚠ WARNING

DO NOT use a flame to check for gas leaks.

On completion of installation, the system must be pressure tested by a qualified technician.

ELECTRICAL CONNECTION

The electrical installation must be carried out in a proper and durable manner; taking into accounts all relevant regulations and codes of practice.

For mains voltage operation, it is important that the circuit to and in the caravan is effectively earthed.

The refrigerator is equipped with a three-prong (grounding) plug for your protection against shock hazards and should be plugged directly into a properly grounded threeprong receptacle. DO NOT cut off or remove the grounding prong from this plug. The free length of the cord is 1.8 m and therefore recommended that the receptacle be located to the left side of the refrigerator (viewed from the rear) and approximately 100-150 mm from the floor. This allows easy access through the vent door.

230-240 V SUPPLIES

Check that the voltage stated on the data plate is the same as the main voltage in use (230-240 V). Plug the 230-240 V refrigerator power cord into an easily accessible wall socket.

Electrical leads must be routed and secured so that they cannot come into contact with hot or sharp parts of the refrigerator.

EXCHANGE OF SUPPLY CORD

If the supply cord is damaged, it must be replaced by the manufacturer, its service agent or similarly qualified persons in order to avoid a hazard.

12 V SUPPLIES

The 12 V connection of the refrigerator is shown in fig. 8. Connect the refrigerator to the vehicle battery or alternator by a direct cable; (check the polarity). The connection is made to the terminal block.

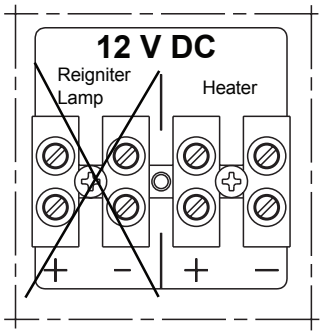

FIG. 8

The connection is made to the positive (+) and negative (-) terminals of the terminal block. Correct polarity must be observed when connecting to the 12 volt DC supply. Do not use the chassis or the vehicle frame as one of the conductors.

Connect two wires at the refrigerator and route directly to the 12 volt DC supply. To avoid a voltage drop, the cross section area of the connecting cables between battery/alternator and the refrigerator must be 10 mm^2. To ensure satisfactory operation, the positive lead must be fitted with a fuse rated at 25 A.

To prevent the refrigerator from draining the battery, make sure that the current supplied to the caravan is cut off when the vehicle engine is not running, for example by fitting an ignition control relay.

Before leaving

Once the installation is complete, test the operation of the refrigerator and instruct the user on its correct operation. If the appliance fails to operate correctly, contact your local Dometic Service provider.

REPOSITIONING THE HINGES

The refrigerator is equipped with reversible doors. A special door reversing kit must be used to reverse the doors. For further information, contact your dealer or Dometic.

MOUNTING DOOR PANEL

The refrigerator is delivered with door panels. Door panels can easily be fitted or changed. The dimensions of the panels must be:

Height	upper door	402 ± 1	mm
	lower door	826 ± 1	mm
Width		525 ± 1	mm
Thickness max.		4	mm

When mounting the panel, proceed as follows:

1. Open the door 90 degrees
2. Remove the door decoration strip (2) by gently pushing the four tabs away with a flat blade screwdriver (1).
3. Insert the vertical edges into the grooves of the door
   frame (3).
4. Push the panel downward so that the lower horizontal edge of the panel (4) is fitted into the bottom grove (5).
5. Snap in the decoration strip (2).

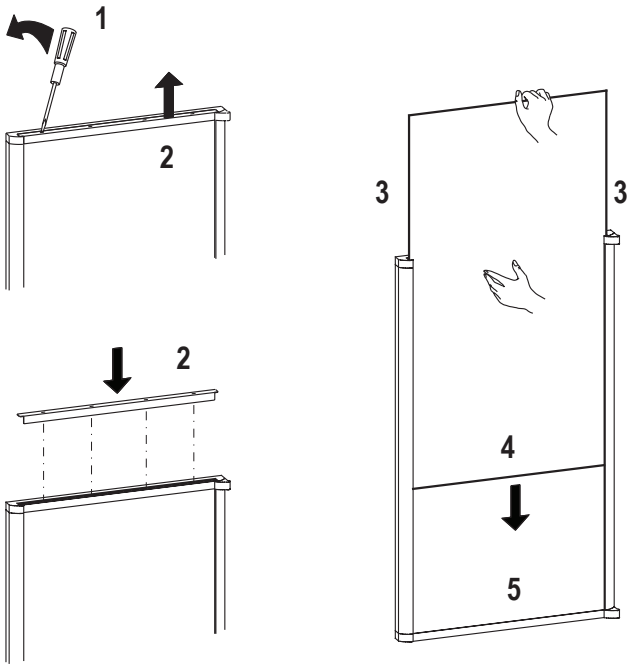
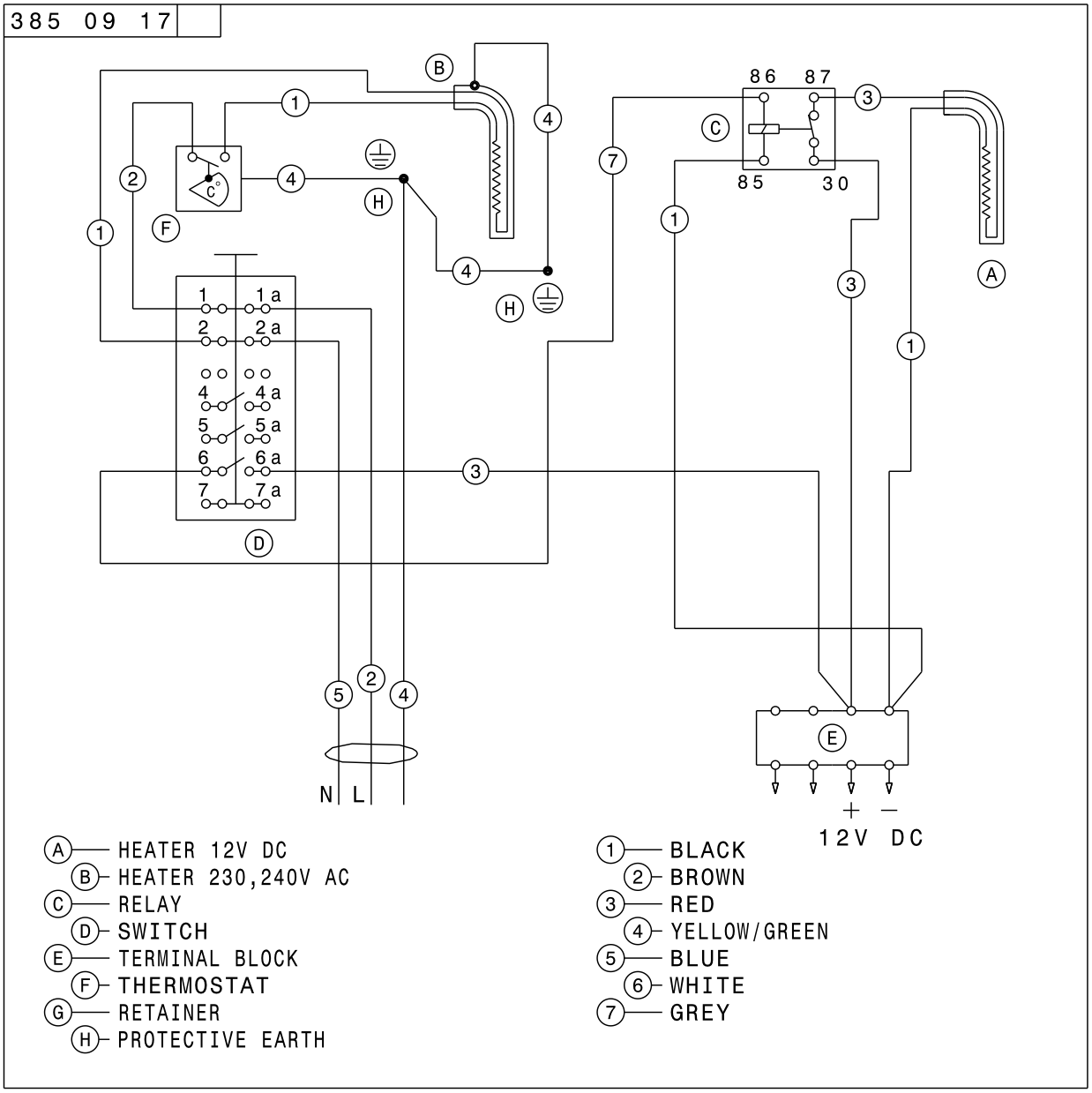
APPENDIX A - WIRING DIAGRAM