Dometic

When ordering parts, always state:
MODEL NO. - PRODUCT NO. - QUANTITY - PART NUMBER - DESCRIPTION

For Electric Details also state:
VOLTAGE - WATTAGE

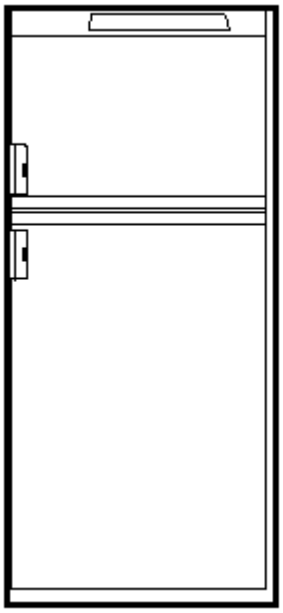

USA
SERVICE OFFICE
Dometic Corporation
509 South Poplar Street
Lagrange, IN 46761
260-463-4858

CANADA
Dometic Dist.
866 Langs Dr.
Cambridge, Ontario
CANADA N3H 2N7
519-653-4390

For Service Center Assistance Call:
800-544-4881

PRODUCT NUMBER	MODEL	MARKET	VOLTAGE	BRAND
921596006	RM2820	USA/Canada	120 V	Dometic

PARTS LIST

MODEL RM2820 Series

Form No. 3308553.001 7/03

©2003 Dometic Corporation
LaGrange, IN 46761

Dometic

NOTES:

ALPHABETICAL INDEX

	Page#	Index#
Cabinet, exterior components	4-5	1-77
Cabinet, interior components	8-9	3-58
Cabinet, rear view	12-13	100-145
Control & Burner Components	10-11	1-150
Door Assm.	6-7	1-26
Wiring Diagram	14	—

SPECIFICATIONS

Model	RM2820
Product Number*	921596006
Energy Source**	120 VAC, Gas
AC Heating Element	
Amperage	2.5
Ohm Resis. +/— 10%	48
Wattage	325W
BTU's Gas Burner	1500
Jet Size	#58
Flue Baffle	
Size	5-1/8" x 13/16"
Position Above Burner	1-7/8"
Ice Trays	0
Crispers	2
Bottle Holders	2
Climate Control Heater	
Amperage	0.5
Ohm Resis. +/— 10%	24
Wattage	6

* Product number located on refrigerator data plate.

** 12 volt DC power is required to operate the refrigerator controls on all models.

CABINET, FRONT VIEW

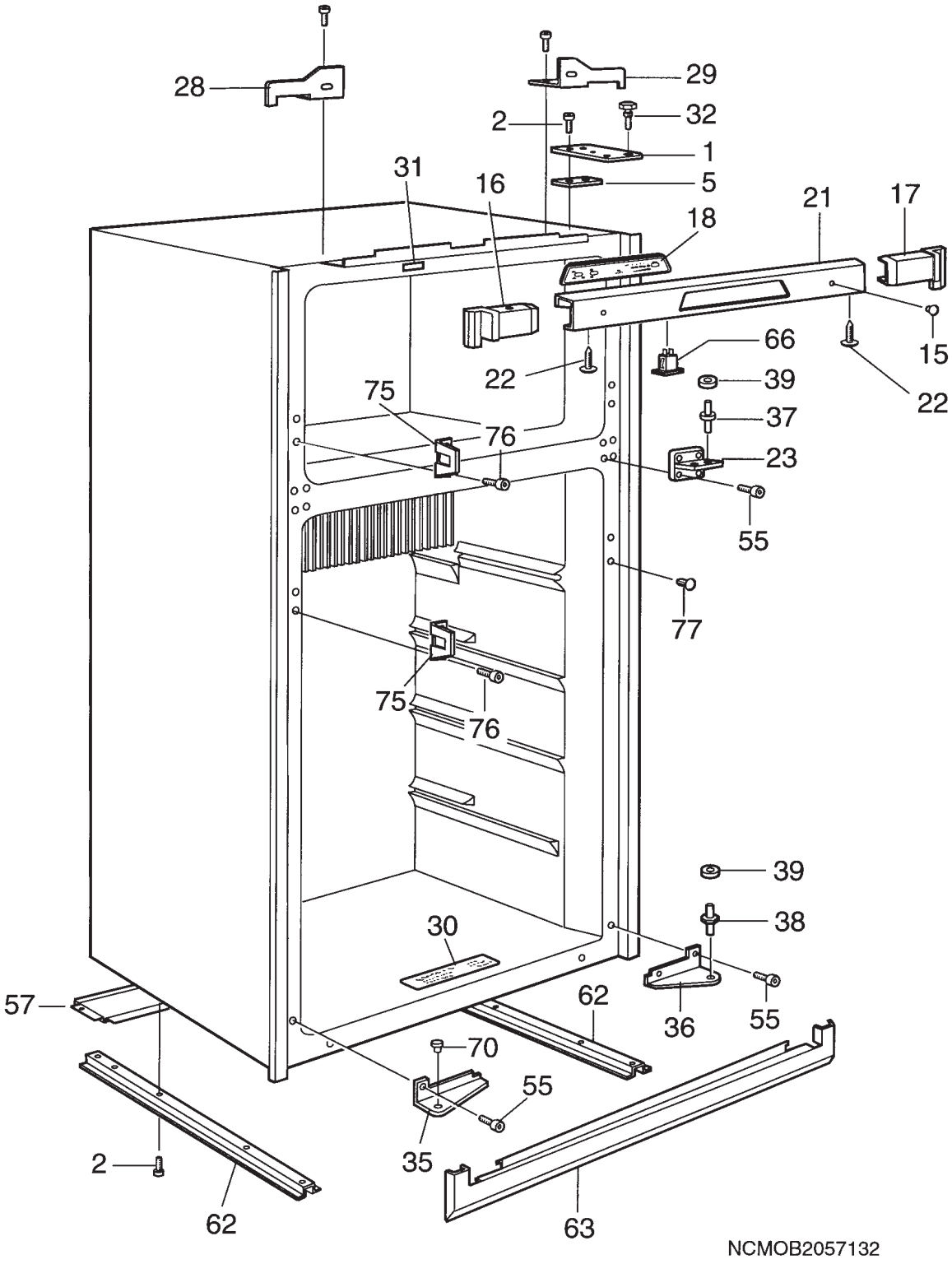

CABINET, FRONT VIEW

Index No.	Part No.	Description
1	2931291013	Hinge, upper
2	3858039096	Screw, zink plated MR X 5x14
5	2931292011	Washer
15	2930132069	Plug
16	2931866020	Side plate, left
17	2931866012	Side plate, right
18	2932884014	Printed circuit
21	2931865139	Front
22	3858047016	Screw w/washer
23	2931289017	Hinge, center
28	2932125020	Bracket, left
29	2932125012	Bracket, right
30	2932435007	Instruction plate
31	2932779008	Label
32	2931288019	Hinge pin
35	2932111012	Hinge, left
36	2932111020	Hinge, right
37	2931287011	Hinge pin, center
38	2931623017	Hinge pin
39	3858010089	Washer
55	3858056017	Screw, M4x12, zincified
57	2930664012	Protection lamina
62	2932110014	Runner
63	2932112044	Base front
66	2932680016	Switch
70	2931284026	Plug, dark grey
75	2931511014	Bracket
76	3858002094	Screw, RXS B4 x 6.5
77	2931510032	Covering washer, plastic

DOOR ASSEMBLY

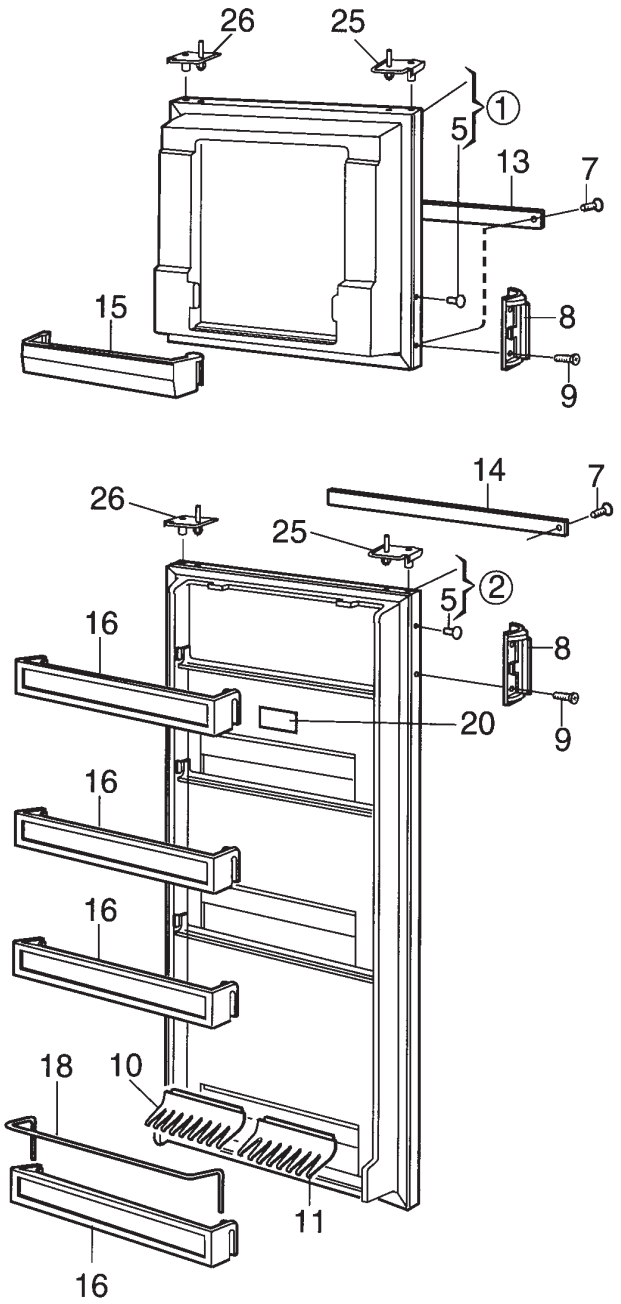

NCMOA2057133

DOOR ASSEMBLY

Index No.	Part No.	Description
1	2931591156	Door, complete
2	2931590182	Door, complete
5	2931510032	Covering washer, plastic
7	3858002110	Screw, RXS B4x16, zincified
8	2931600023	Door handle assembly
9	3858002102	Screw, RXS B4 x 16
10	2930715053	Bottle holder, 179mm
11	2930715061	Bottle holder, 202mm
13	3850382023	Decoration
14	3850382056	Decoration
15	2931418038	Door shelf
16	2001732185	Door shelf, white
18	2001734017	Rack
20	2932722008	Label
25	2931582015	Hinge bushing
26	2931582023	Hinge bushing

CABINET, FRONT VIEW

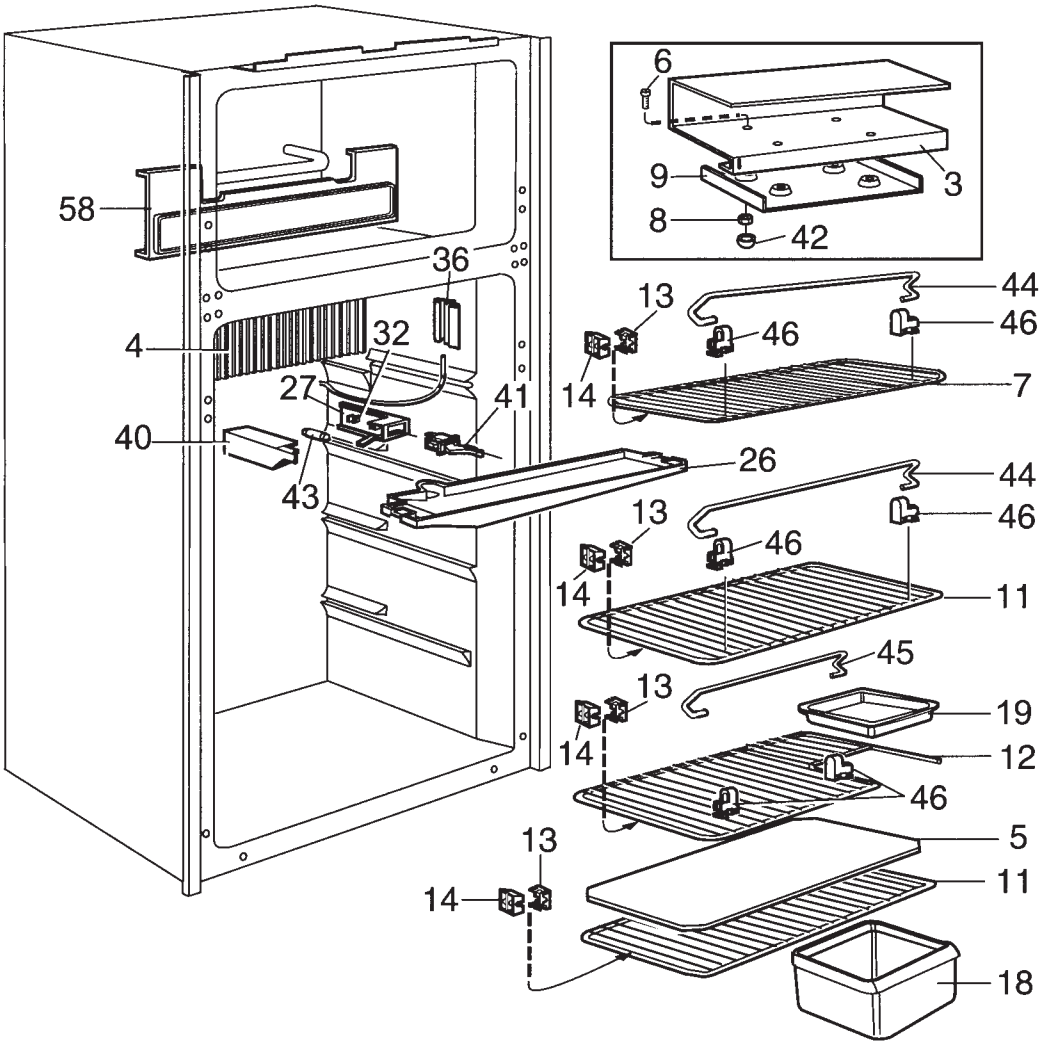

CABINET, FRONT VIEW

Index No.	Part No.	Description
3	2007535038	Shelf
4	2007605013	Cooling flange
5	2931117051	Absteller, plastic
6	3858041019	Screw, M6S, 5 x 20 nickel plated
7	2002652374	Shelf, 7"
8	3858009073	Nut, ML6 M5, brass, nickel plated
9	2007649011	Plate
11	2002652366	Shelf 12"
12	2930133158	Shelf
13	2007393024	Stop, outside
14	2007392026	Stop, inside
18	2002726160	Vegetable box, white
19	2930136011	Box
26	2007610013	Drip tray
27	2932523018	Lamp holder
32	2932108018	Contact pin
36	2932456011	Bracket, thermistor
40	2932106012	Lamp cover
41	2940825009	Switch
42	2930487000	Lid
43	2007290006	Lamp, 12V, 10W
44	2007337138	Bow
45	2007337187	Bow
46	2930693045	Cover
58	2931006015	Coverplate

CONTROL & BURNER

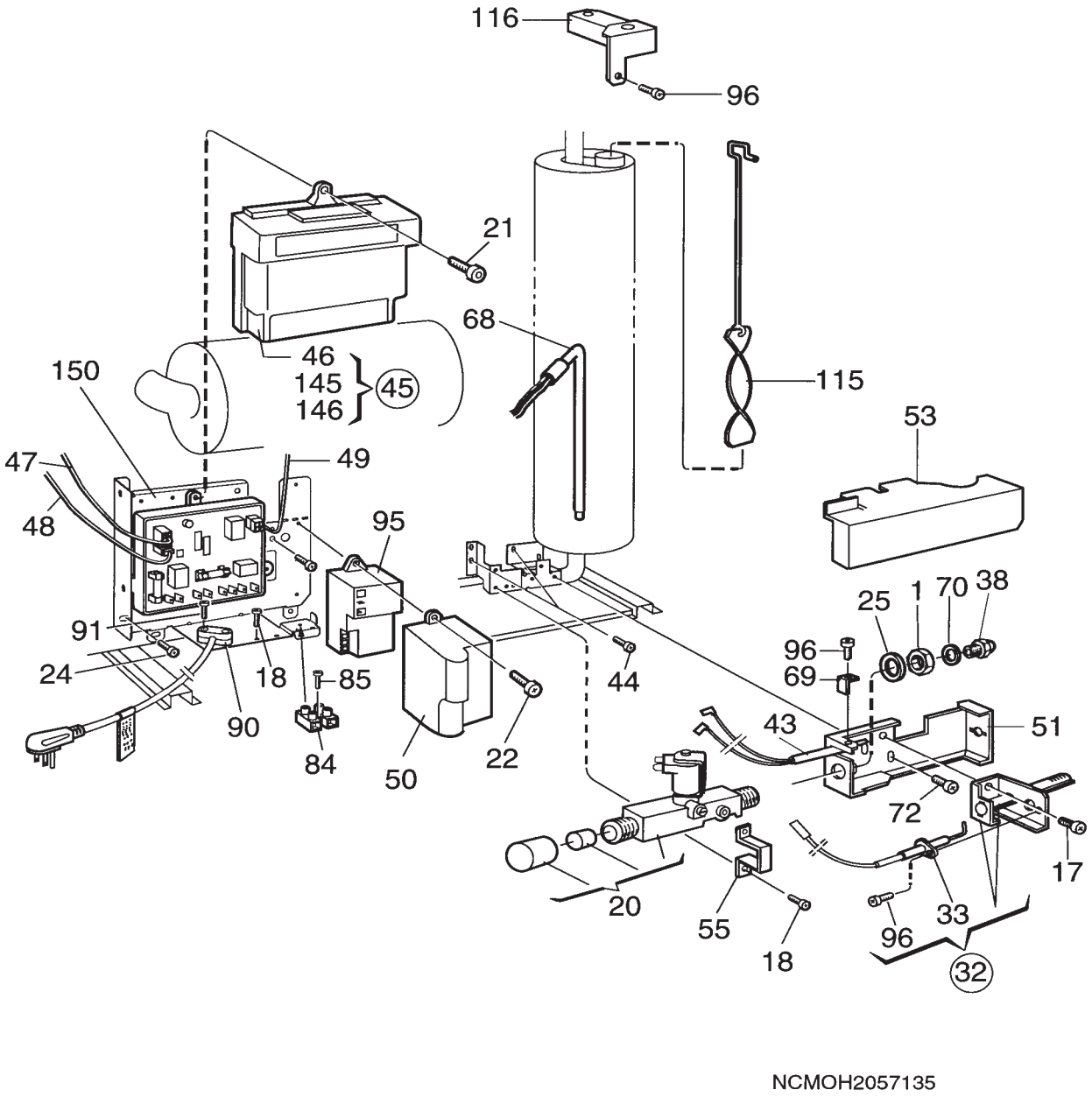

CONTROL & BURNER

Index No.	Part No.	Description
1	0140207044	Nut
17	3858039039	Screw, MRX M4 x 8 zinc
18	3858039047	Screw, MRX M4 x 10 zinc
20	2932615012	Solenoid valve
21	3858002151	Screw, RXS B6 x 13 zinc
22	3858005014	Screw, RXK B6 x 9.5 zinc
24	3858020021	Screw, B8 x 25 zink
25	3858010071	Washer, 12.5 x 18.5 x 1
32	2930697095	Burner w/conductor
33	2932781012	Electrode w/conductor
38	2007419217	Burner jet, #58
43	2931826016	Thermocouple
44	3858039096	Screw, MRX M5 x 14
45	2932881010	Electronic PCB
46	2931858019	Cap
47	2931862011	Conductor, PCB
48	2931863035	Conductor, thermistor
49	2954437030	Conductor, gas valve
50	2931886010	Cover
51	2931913012	Burner housing
53	2931572016	Cover, burner housing
55	2932662014	Bracket
68	0173768037	Heater, 115V, 325W
69	2930660010	Fixing angle
70	2007457001	Washer, .5mm
72	3858039021	Screw, MRX M4 x 6
84	3858022019	Junction block
85	3858002185	Screw, RXS, B6 x 25, zinc
90	0561014010	Tension relief
91	3858002177	Screw, RXS, B6 x 19, zinc
95	2931132019	Spark ignition device
96	3858002144	Screw, RXS B6 x 9.5
115	2007590066	Baffle
116	2931540013	Flue
145	2943541009	Fuse, 3A
146	2943542007	Fuse, 5A
150	3850337019	Bracket

CABINET, REAR VIEW

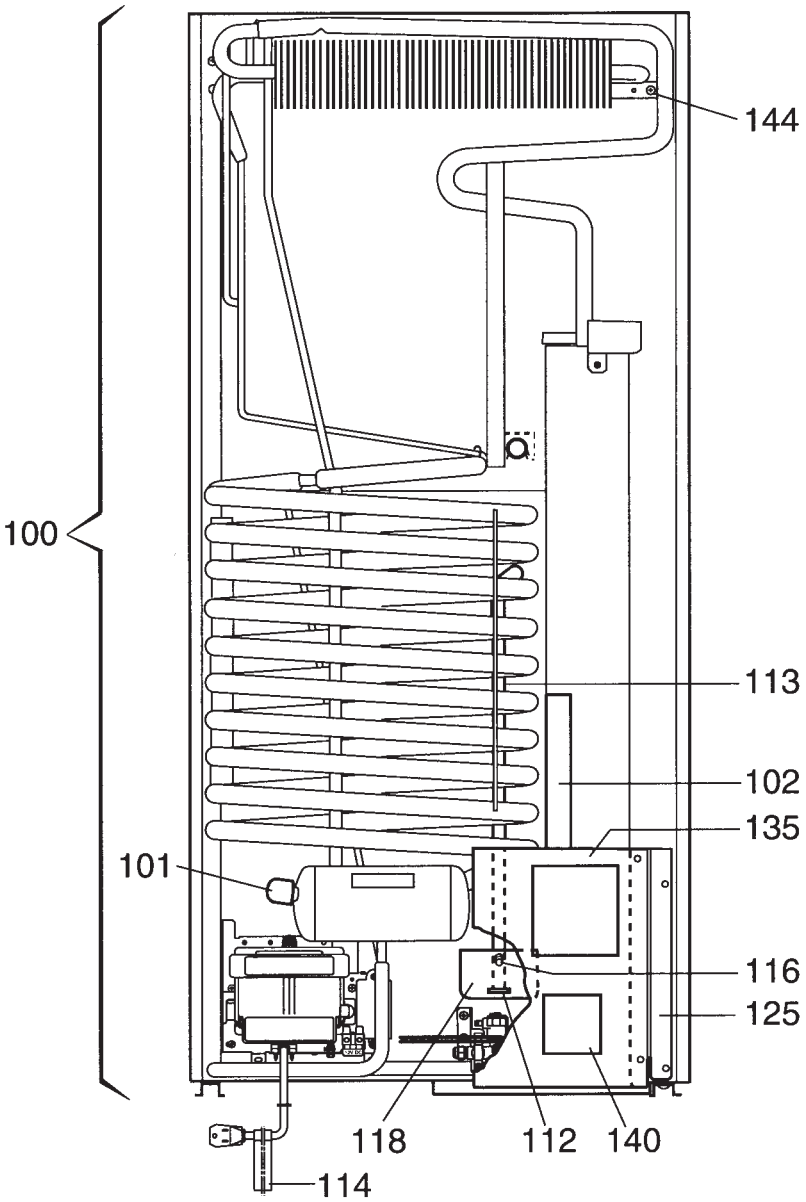

CABINET, REAR VIEW

Index No.	Part No.	Description
100	2934909090	Cooling unit, 909
101	0173228008	Stopper
102	2933557007	Cover
112	2932115013	Plug, discharge pipe
113	2932692011	Tube, drain
114	2932733005	Label
116	2931829010	Pipe
118	2931828012	Drip tray
125	2930784018	Protection lamina
135	2930785015	Protection lamina
140	2932723006	Label
144	3858039096	Screw, MRX M5 x 14130
145	2002699037	Power cord

WIRING DIAGRAM

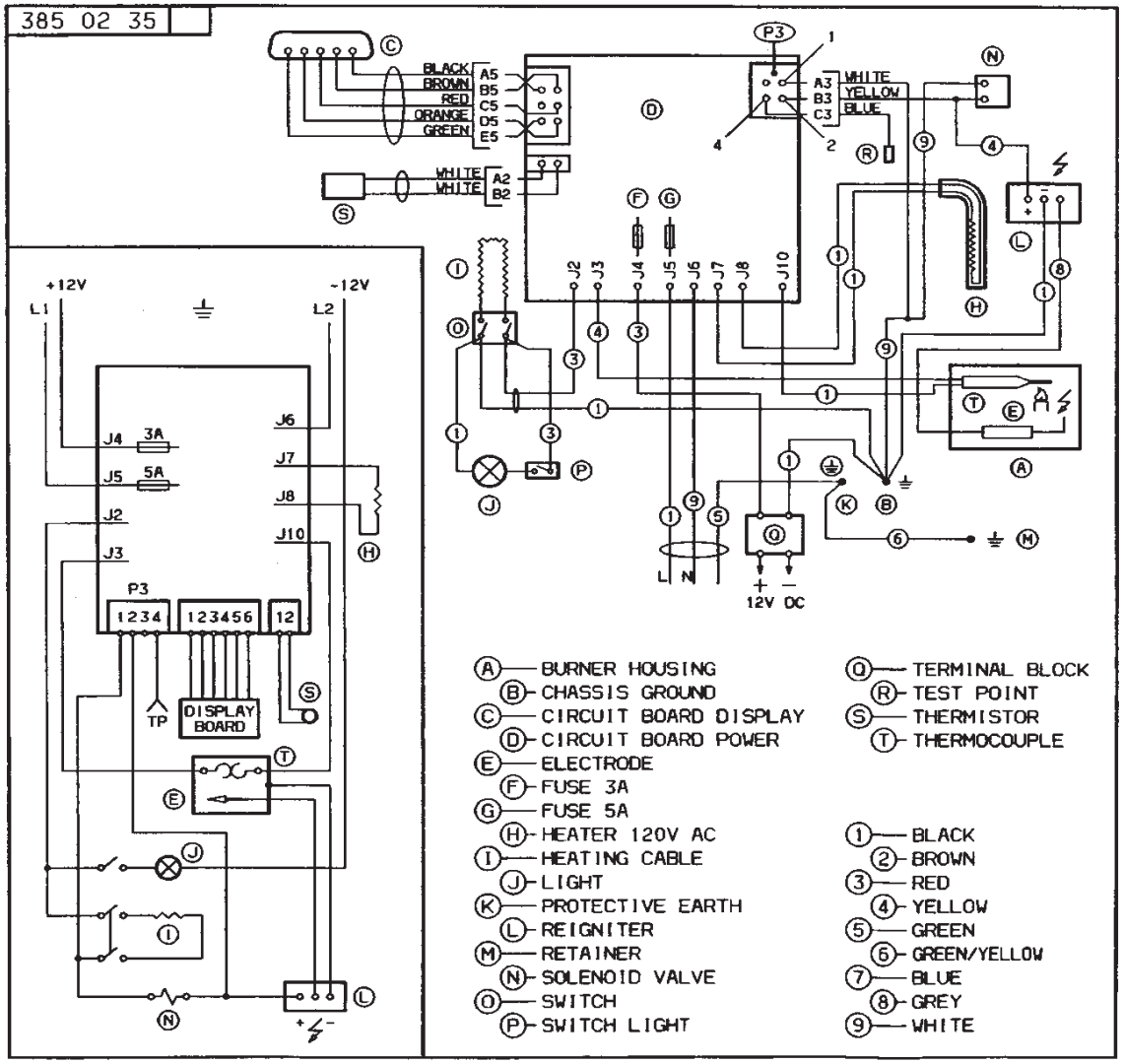

S38502350EN