Atwood Mobile Products

Flange Mounted Entry Door
Installation Instructions

Door and Rough Opening Preparation

1. ***Do not remove any shipping clips, spacers, or fasteners.*** ***Door must remain closed and locked during the installation*****. Opening the door prior to installation will destroy the pre-squaring done by the manufacturer.**

2. **Check rough opening to insure that it is both square and plumb. The rough opening should be ½ inch larger than the framework of the door to be installed. The diagonal measurements should be within ¼ inch of each other. (*See Figure 1*)**

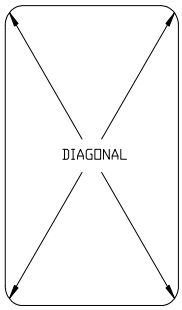

Figure 1

3. **Make certain belt rails do not protrude into the rough opening in any way. *(See Figure 2)***

4. **Make certain vertical studs are top flush with top and bottom plates. *(See Figure 3)***

5. **Make certain all mounting surfaces (siding seams included) are securely fastened and flat around perimeter of door opening. Check to see that the floor is free of any debris that might not allow the door to sit level.**

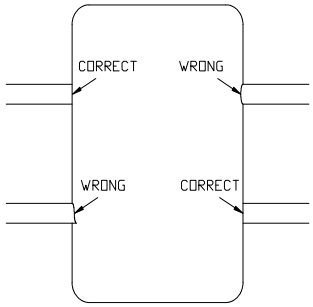

Figure 2

Door Installation

6. **Apply a suitable non-hardening sealant tape to the backside of the door mounting flange and threshold.**

7. **Insert the door assembly carefully into the rough opening. Make certain the threshold (sill) is flat against the floor. Center the door in the rough opening.**

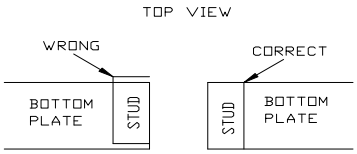

Figure 3

Instruction subject to change without notification. Contact originator with any questions.

Atwood Mobile Products

Flange Mounted Entry Door Installation Instructions

8. **Insure that the lock bolt mechanism is free in rough opening as not to cause a bind. Make sure the door mounting flange is seated up against the outside surface of the sidewall.**

9. **Fasten the door with screws through the holes in the flange. Drive the first three (3) screws in the middle holes on the hinge side of the frame. Drive the next three (3) screws in the middle holes on the lock side of the frame. Then finish attaching the hinge side of the flange, followed by the lock side, and then the header. Screws should be driven in straight.** ***(See Figure 4)***

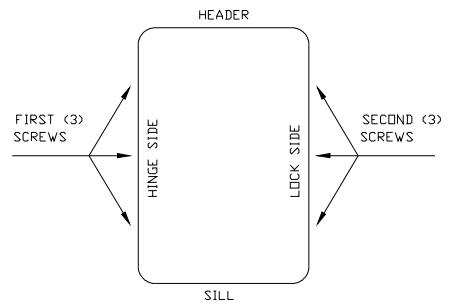

Figure 4

10. **Remove shipping clips and open the door. Remove the installation spacers from the primary and screen door.**

11. **Drive screws through threshold if necessary or desired.** ***(See Figure 5)***

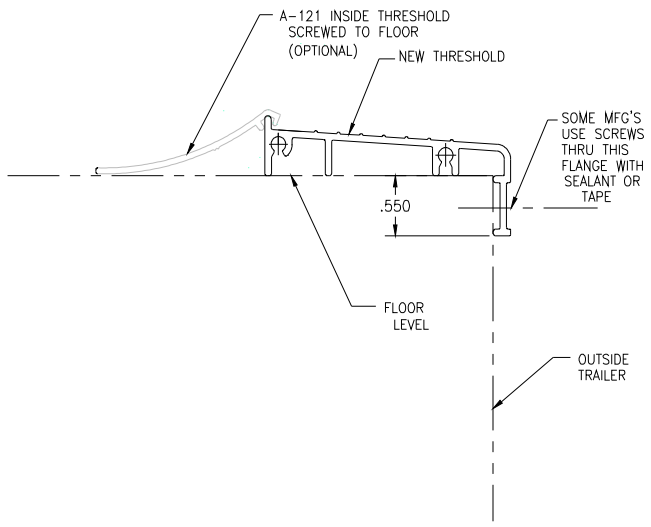

Figure 5

Instruction subject to change without notification. Contact originator with any questions.