DOMETIC

CLIMATE CONTROL
FRESHJET

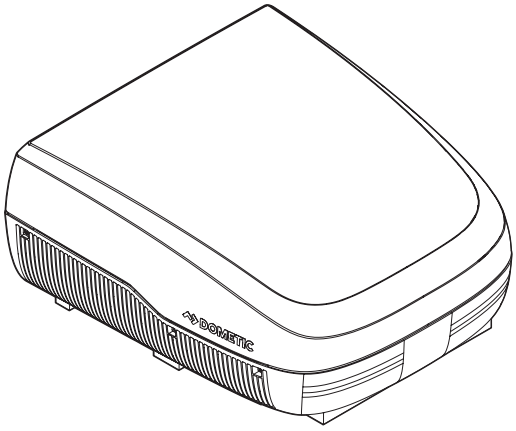

FreshJet3 Series and FreshJet4 Series

EN

Rooftop Air Conditioner (Air Distribution Box, Wall Thermostat Controls)
Installation manual 3

⚠ WARNING
Cancer and Reproductive Harm
www.P65Warnings.ca.gov

C US

Form No. 3317883.000 4445104130 54-632-MA04 4450026413 2023-10-11

Copyright

© 2023 Dometic Group. The visual appearance of the contents of this manual is protected by copyright and design law. The underlying technical design and the products contained herein may be protected by design, patent or be patent pending. The trademarks mentioned in this manual belong to Dometic Sweden AB. All rights are reserved.

Service Center & Dealer Locations
Visit: www.dometic.com

Please read these instructions carefully and follow all instructions, guidelines, and warnings included in this product manual in order to ensure that you install, use, and maintain the product properly at all times. These instructions MUST stay with this product.

By using the product, you hereby confirm that you have read all instructions, guidelines, and warnings carefully and that you understand and agree to abide by the terms and conditions as set forth herein. You agree to use this product only for the intended purpose and application and in accordance with the instructions, guidelines, and warnings as set forth in this product manual as well as in accordance with all applicable laws and regulations. A failure to read and follow the instructions and warnings set forth herein may result in an injury to yourself and others, damage to your product, or damage to other property in the vicinity. This product manual, including the instructions, guidelines, and warnings, and related documentation, may be subject to changes and updates. For up-to-date product information, please visit www.dometic.com.

Contents

1 Related documents 3

2 Explanation of symbols and safety instructions 4

2.1 Recognize safety information 4

2.2 Understand signal words 4

2.3 Supplemental directives 4

2.4 General safety messages. 4

3 Intended use 5

4 General information 5

4.1 Tools and materials 5

4.2 Model identification 5

4.3 ADB components 6

4.4 Thermostat compatibility 6

4.5 Rooftop component dimensions 6

4.6 ADB component dimensions 7

4.7 Placement requirements 7

5 Specifications 9

6 Wiring diagrams 10

7 Pre-installation 11

7.1 Determining your cooling needs 11

7.2 Preparing the thermostat opening 11

7.3 Preparing the RV roof opening 12

7.4 Routing the supply wiring to the roof opening 13

7.5 Positioning the rooftop component. 15

7.6 Preparing to work inside the RV 15

8 Installation 16

8.1 Installing and wiring the thermostat and optional sensor 16

8.2 Installing the electronic control box 18

8.3 Configuring the electronic control box 18

8.4 Installing the foam dividers 20

8.5 Securing the ADB 23

9 System check 24

9.1 Resetting the system 24

9.2 Checking out the system. 25

10 Operation. 25

11 Maintenance 25

11.1 Cleaning the air filter 25

11.2 Cleaning the ADB 25

11.3 Servicing the blower 25

12 Troubleshooting 26

13 Disposal 27

Limited one-year warranty 27

1 Related documents

Find the installation manual on-line in French at
http://qr.dometic.com/beGojo

Find the installation manual on-line in Spanish at
http://qr.dometic.com/beGomG

2 Explanation of symbols and safety instructions

This manual has safety information and instructions to help you eliminate or reduce the risk of accidents and injuries.

2.1 Recognize safety information

This is the safety alert symbol. It is used to alert you to potential physical injury hazards. Obey all safety messages that follow this symbol to avoid possible injury or death.

2.2 Understand signal words

A signal word will identify safety messages and property damage messages, and also will indicate the degree or level of hazard seriousness.

DANGER!
Indicates a hazardous situation that, if **not** avoided, will result in death or serious injury.

WARNING
Indicates a hazardous situation that, if **not** avoided, could result in death or serious injury.

CAUTION
Indicates a hazardous situation that, if **not** avoided, could result in minor or moderate injury.

NOTICE: Used to address practices **not** related to physical injury.

Indicates additional information that is **not** related to physical injury.

2.3 Supplemental directives

To reduce the risk of accidents and injuries, please observe the following directives before proceeding to install, operate, or service this product:

- Read and follow all safety information and instructions.
- Read and understand these instructions before installing, operating, or servicing this product.
- The installation must comply with all applicable local or national codes, including the latest edition of the following standards:

  U.S.A.

  – ANSI/NFPA70, National Electrical Code (NEC)
  – ANSI/NFPA 1192, Recreational Vehicles Code
  – ANSI Z21.57, Recreational Vehicles Code

  Canada

  – CSA C22.1, Parts I & II, Canadian Electrical Code
  – CSA Z240 RV Series, Recreational Vehicles

2.4 General safety messages

WARNING: ELECTRICAL SHOCK, FIRE, AND/OR EXPLOSION HAZARD. Failure to obey the following warnings could result in death or serious injury:

- Use only Dometic replacement parts and components that are specifically approved for use with the product.
- Avoid improper installation, adjustment, alterations, service, or maintenance of the product. Installation, service, and maintenance **must** be done by a qualified service person only.
- Do **not** modify this product in any way. Modification can be extremely hazardous.
- Use care when diagnosing and/or adjusting components on a powered product.
- This product is **not** intended for use by persons (including children) with reduced physical, sensory or mental capabilities, or lack of experience and knowledge, unless they have been given supervision or instruction concerning use of the product by a person responsible for their safety.
- Children should be supervised to ensure that they do not play with the product.

The FreshJet4 series is equipped with a LED light on the shroud. The light cannot be used while the recreational vehicle is in motion.

3 Intended use

The FreshJet Rooftop Air Conditioner (Air Distribution Box, Wall Thermostat Controls), (also referred to as the "product" or "unit"), is designed and intended for installation on the roof of a Recreational Vehicle, hereinafter referred to as the "RV", during or after the time it is manufactured. The product is comprised of three main components: the rooftop component, the internal air distribution box (ADB) component, and the wall thermostat, hereinafter referred to as the "thermostat". This product is only suitable for the intended purpose and application in accordance with these instructions.

This manual provides information that is necessary for proper installation of the product. Poor installation and/or improper operating or maintenance will result in unsatisfactory performance and a possible failure. The manufacturer accepts no liability for any injury or damage to the product resulting from:

- Incorrect assembly or connection, including excess voltage
- Incorrect maintenance or use of spare parts other than original spare parts provided by the manufacturer
- Alterations to the product without express permission from the manufacturer
- Use for purposes other than those described in this manual

Dometic reserves the right to change product appearance and product specifications.

4 General information

This section provides general information about the unit and its components.

The images used in this document are for reference purposes only. Components and component locations may vary according to specific product models. Measurements may vary ±0.38 in. (10 mm).

4.1 Tools and materials

Dometic recommends that the following tools and materials be used.

Recommended tools and materials	
Framing wood	All-weather caulk
Knife/box cutter	Screwdrivers
Electrical connectors	3/8" torque wrench socket
Basic electrical connection tools	Torque wrench (22.2 in. lbs /2.5 N·m)
RJ-45 crimping tool	

Optional parts	
Part name	**Dometic part number**
FreshJet air distribution box spacer kit [1]	9620006638
2-pin Molex Mini-Fit Jr. receptacle	Not applicable

[1] Available as an accessory (not included). Accommodates a roof thickness greater than 5.5 in. (140 mm) and includes two spare 1.2 in. (30 mm) foam dividers and four 9-1/2 in. long bolts.

4.2 Model identification

The model identification labels are located as follows:

- The rooftop component and serial numbers are found on the identification label located on the bottom of the base pan. To view the identification label, remove the ADB cover from the ADB.
- The ADB component model and serial numbers are found on the rating plate located on the ceiling template. To view the rating plate, look through the filter opening.

Have this information ready before contacting Dometic for service.

4.3 ADB components

This section identifies the main ADB components.

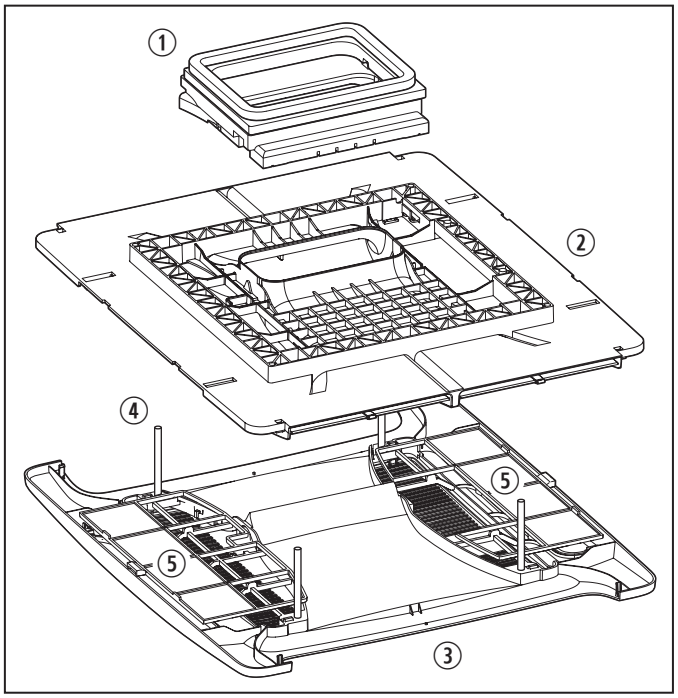

1 ADB components

1. Foam dividers
2. Ceiling template
3. ADB cover
4. Long bolts
5. Air filter

4.4 Thermostat compatibility

This section identifies the thermostat displays compatible with this ADB.

Display	Model
Connect Essential Thermostat	INC1LED
Connect Pro Thermostat	INC1015RD

4.5 Rooftop component dimensions

This section provides the external dimensions and clearance measurements of the rooftop component.

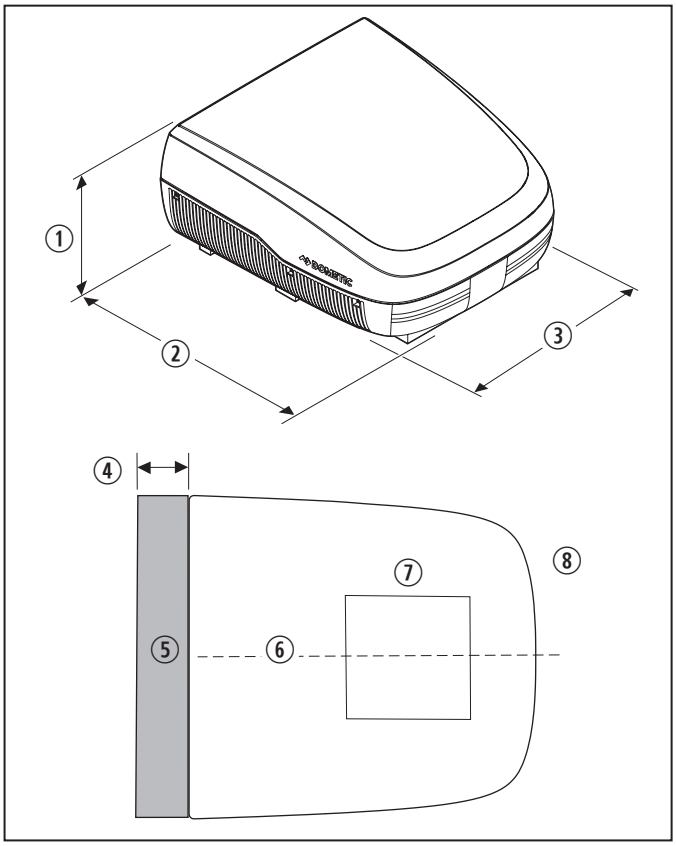

2 FreshJet (FJX3 and FJX4 series)

1. 14.4 in. (366 mm)
2. 29.6 in. (752 mm)
3. 27.6 in. (701 mm)
4. 18.0 in. (457 mm) clearance
5. Air flow clearance area (shaded)
6. Center line of unit
7. Roof opening
8. Front of unit

4.6 ADB component dimensions

This section provides the internal dimensions of the ADB component.

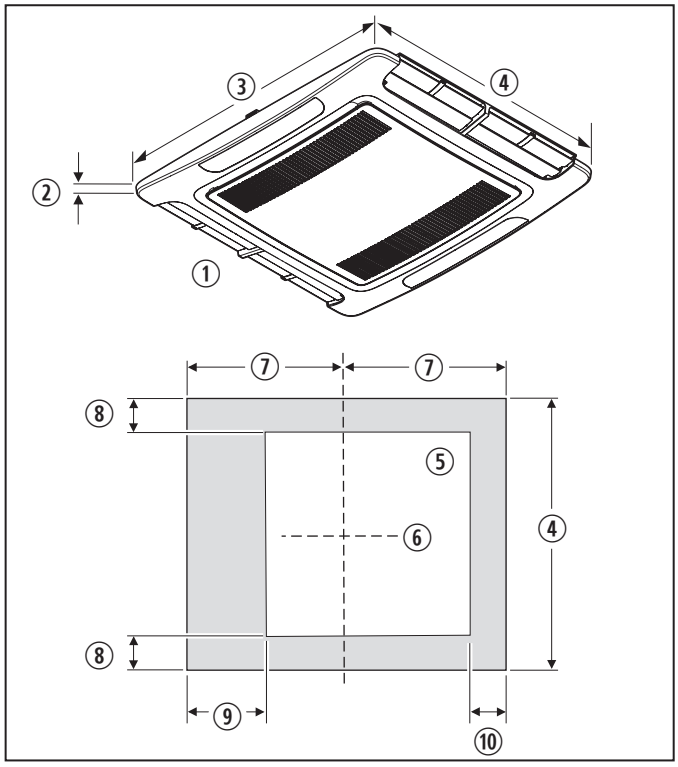

3 Dimension measurements

① Front of unit
② 2.3 in. (58 mm)
③ 23.0 in. (584 mm)
④ 20.4 in. (518 mm)
⑤ Roof opening
⑥ Center line of unit
⑦ 11.6 in. (295 mm)
⑧ 3.4 in. (86 mm)
⑨ 6.0 in. (152 mm)
⑩ 3.0 in. (76 mm)

4.7 Placement requirements

This section describes factors to consider when placing the rooftop component and the thermostat.

4.7.1 Planning the rooftop location

The rooftop component is specifically designed for installation on the roof of an RV. To determine where to place the rooftop component, consider these items.

- A 14.3 in. x 14.3 in. (363 mm x 363 mm) [±0.1 in. (3 mm)] square opening and hereinafter referred to as "roof opening" is required. The roof opening is part of the return air system of the rooftop component and must be finished in accordance with NFPA 1192.
- The rafter/joist support frames must be spaced no greater than 16.0 in. (406 mm) on center. The rooftop component is designed to fit over an existing roof vent opening.
- The distance between the roof and the RV ceiling must be between 1.5 in. (38 mm) and 6.0 in. (152 mm).
- When no roof vent is available or when another location is desired, an opening must be cut through the roof and ceiling of the RV. This opening must be located between the roof reinforcing members. Consider these recommendations along with your cooling needs:
  - For a single rooftop component: mount the rooftop component slightly forward of the RV's center (front to back) and centered from side to side.
  - For two rooftop components: measuring from the front of the RV and centering from side to side, mount the first rooftop component at 1/3 the length of the RV and the second rooftop component at 2/3 the length of the RV.

4.7.2 Planning the thermostat location

The proper location of the thermostat is important to ensure the unit provides a comfortable RV temperature. To determine where to place the thermostat, consider these items:

- Locate the thermostat 54.0 in. (1.4 m) above the floor.
- Install the thermostat on a partition, not on an outside wall.
- Never expose the thermostat to direct heat from lamps, the sun, or other heat-producing items.
- Avoid locations close to doors that lead outside, windows, or adjoining outside walls.
- Avoid locations close to supply registers and the air from them.

For thermostats installed with an optional indoor temperature sensor in all zones, consider these additional items:

- The thermostat may be mounted anywhere in the RV that is convenient.
- Avoid hard to reach and hard to see areas.
- See the instructions provided with the indoor temperature sensor for installation details.

For multiple, single zone thermostats, install each individual thermostat in the room that the AC is responsible for cooling.

4.7.3 Tilt requirements

When measuring for placement, perform the following actions.

1. Make all measurements while the RV is parked on a level surface.
2. Install the rooftop component on a flat and level roof section.
3. Use the tilt allowance table to determine the maximum acceptable roof tilt.

Tilt allowance	
Model number	**Maximum tilt (all directions)**
FreshJet3 series FreshJet4 series	15°

5 Specifications

This section provides the electrical specifications by model.

FreshJet model	Nominal capacity cooling (BTU HR)	Electrical rating	Compressor amps		Fan motor amps (high speed)		Refrigerant R-410A	Minimum wire size[1]	AC circuit protection[2] (installer supplied)	Minimum generator size[3] (1 unit/ 2 units)
			Rated load	Locked rotor	Rated load	Locked rotor				
FreshJet3 model series										
FJX3473EWHAS	13,500	115 VAC, 60 HZ, 1 ph	13.0	73.0	3.3	6.9	12.7 oz (376 ml)	12 AWG	20 Amp	3.5 kW/ 5.0 kW
FJX3473EBKAS	13,500									
FJX3573EWHAS	15,000						13.4 oz (396 ml)			
FJX3573EBKAS	15,000									
FJX3573EHPWHAS[4]	15,000									
FJX3573EHPBKAS[4]	15,000									
FreshJet4 model series										
FJX4373EHEWHASL	High efficiency	115 VAC, 60 HZ, 1 ph	9.0	73.0	2.2, 0.87[5]	3.0, 1.8[5]	13.4 oz (396 ml)	12 AWG	15 Amp	3.5 kW/ 5.0 kW
FJX4373EHEBKASL	High efficiency									
FJX4473EWHASL	13,500		13.0				12.7 oz (376 ml)		20 Amp	
FJX4473EBKASL	13,500									
FJX4573EWHASL	15,000						13.4 oz (396 ml)			
FJX4573EBKASL	15,000									
FJX4573EHPWHASL[4]	15,000									
FJX4573EHPBKASL[4]	15,000									

[1] The wiring size indicated is for copper wiring up to 24 ft (7.3 m) in length. For wire lengths over 24 ft (7.3 m), consult the National Electrical Code for proper sizing.
[2] Circuit protection: a time delay fuse or circuit breaker is required.
[3] Dometic Corporation gives general guidelines for generator requirements. These guidelines come from experiences people have had in actual applications. When sizing the generator, the total power usage of your RV must be considered. Generators may lose power at high altitudes and from lack of maintenance.
[4] This model includes a heat pump.
[5] The FreshJet 4 series have dual high speed fans.

6 Wiring diagrams

This section provides the wiring diagrams for the product.[1]

[1] Wiring Diagram Definitions; 115 VAC; 60 Hz 1 PH; Use Copper Conductors only

- - - - - - Field wiring
---------- Factory wiring
• Line splice

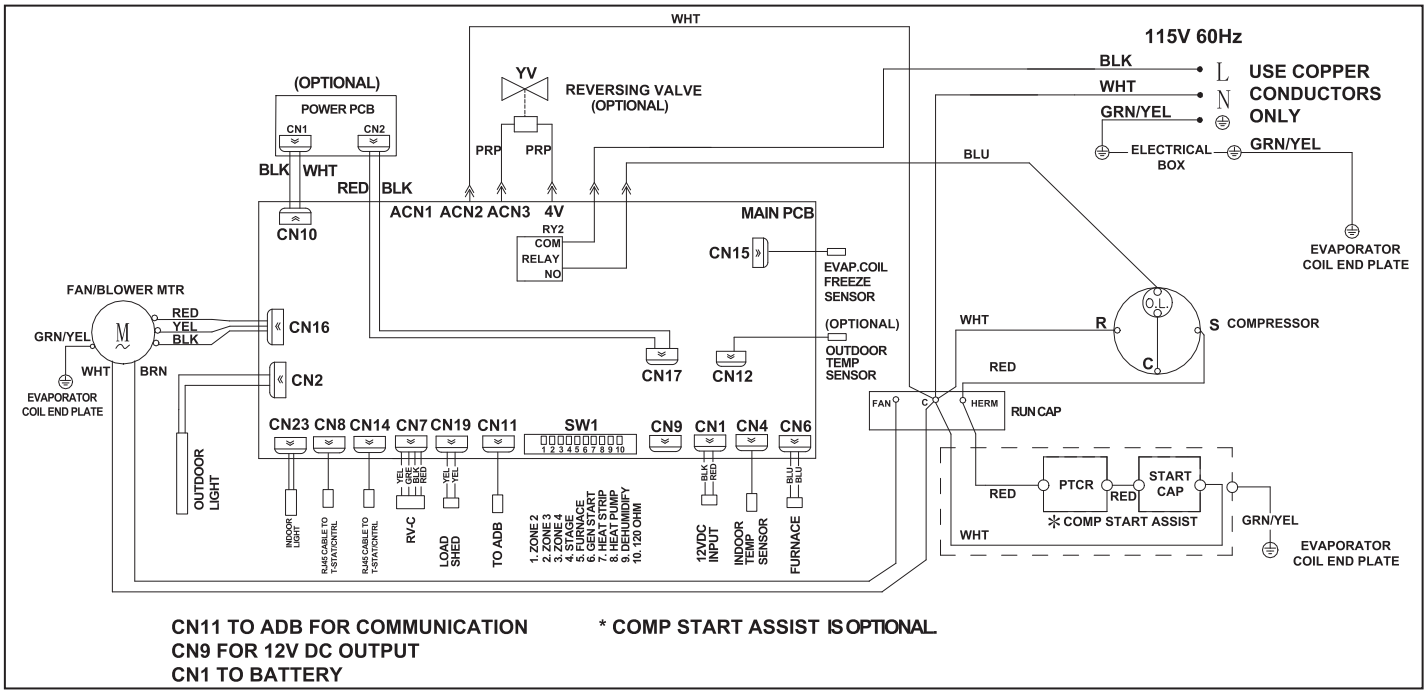

4 FreshJet3 Series

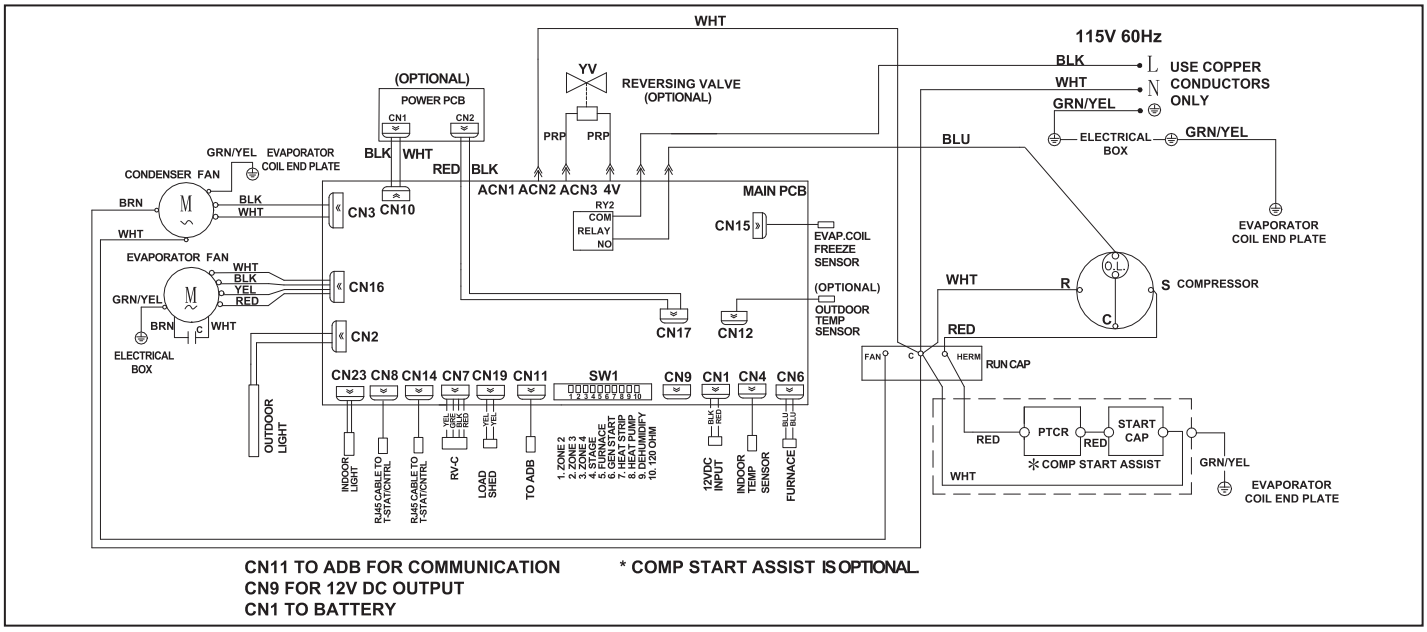

5 FreshJet4 Series

7 Pre-installation

WARNING: FIRE OR ELECTRICAL SHOCK HAZARD. Failure to obey these warnings could result in death or serious injury.

- Shut off the gas supply, disconnect the 115 VAC power from the RV, and disconnect the positive (+) 12 VDC terminal from the supply battery before drilling or cutting into the RV.
- Make sure there are no obstacles such as wires or pipes inside the RV's roof.
- Provide grounding in compliance with all applicable electrical codes.

CAUTION: LIFTING HAZARD.
Use proper lifting technique and control when lifting the rooftop component. Two people are required to lift the rooftop component to the roof. Failure to obey this caution could result in minor or moderate injury.

NOTICE: **Failure to follow these notices could result in damage to the rooftop component and/or the RV.**

- **Never** create a low spot on the RV roof.
- Maintain the structural integrity of the RV roof. The roof **must** be designed to support 130 lbs (59 kg) when the RV is in motion. Normally, a 200 lb (91 kg) static load design will meet this requirement.
- Read this entire section before beginning the installation.

This section describes how to install and set up the unit.

7.1 Determining your cooling needs

When determining your cooling requirements, consider the following items:

- The size of the RV
- The RV window area (which could increase heat gain)
- The amount of insulation in the walls and the roof
- The geographical location where the RV will be used
- The personal comfort level required

7.2 Preparing the thermostat opening

1. Confirm the gas supply is shut off, and the 115 VAC power from the RV and the positive (+) 12 VDC terminal from the supply battery are disconnected.
2. Consider the dimensions and placement for a new opening or modifying an existing opening. See "Placement requirements" on page 7.

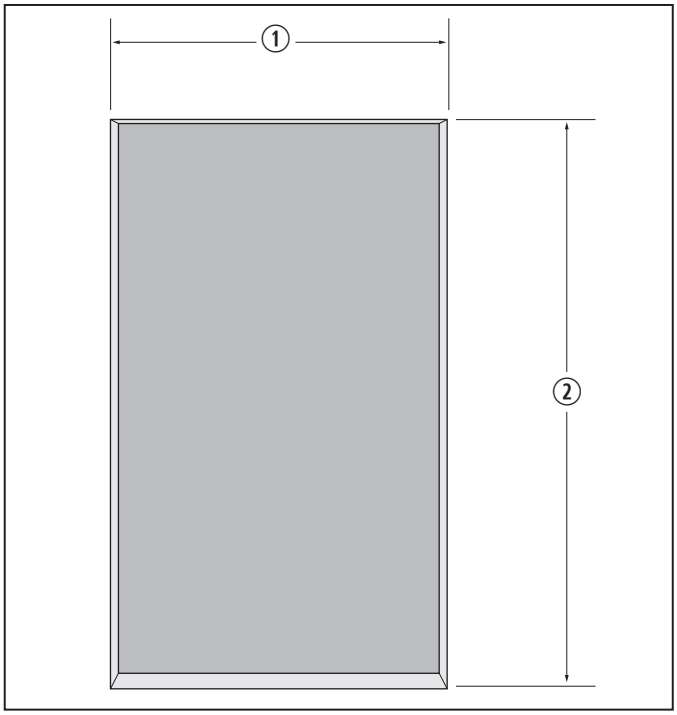

6 Thermostat cutout dimensions

① 2.6 in. (67 mm) ② 4.4 in. (112 mm)

3. Create the opening for the thermostat.
4. Create a minimum 0.6 in. (16 mm) diameter hole in the opening as required for the thermostat wiring.

7.3 Preparing the RV roof opening

NOTICE: The roof opening **must** be structurally framed to provide adequate support and to prevent air from being drawn from the roof cavity. Framing stock with 0.75 in. (19 mm) or more thickness **must** be used. Remember to provide an entrance hole for the power supplies, thermostat wiring, and 12V power at the front of the opening. See Figure 8.

This section describes how to prepare the RV roof opening.

7.3.1 Using an existing roof vent opening

If the roof does not have an existing roof vent, go to "Making a new roof opening" on page 12.

This section describes how to prepare the RV roof when using an existing vent.

1. Shut off the gas supply, disconnect the 115 VAC power from the RV, and disconnect the positive (+) 12 VDC terminal from the supply battery.
2. Unscrew and remove the roof vent.
3. Remove the caulking compound around the opening.
4. Seal the screw holes and seams where the roof gasket will be located. Use a good grade of all-weather sealant.
5. Measure the roof opening (review "Placement requirements" on page 7). If the roof opening is within specifications, go to "Routing the supply wiring to the roof opening" on page 13.
6. If the opening needs to be resized, proceed to "Making a new roof opening" on page 12.
   - If the opening exceeds 14.4 x 14.4 in. (366 x 366 mm), it will be necessary to reduce the size of the opening.
   - If the opening is less than 14.1 x 14.1 in. (358 x 358 mm), it will be necessary to enlarge the opening.

7.3.2 Making a new roof opening

If the roof has an existing roof vent, see "Using an existing roof vent opening" on page 12.

This section describes how to prepare the RV roof when making a new roof opening.

1. Shut off the gas supply, disconnect the 115 VAC power from the RV, and disconnect the positive (+) 12 VDC terminal from the supply battery.
2. Carefully mark the required roof opening. See "Placement requirements" on page 7.

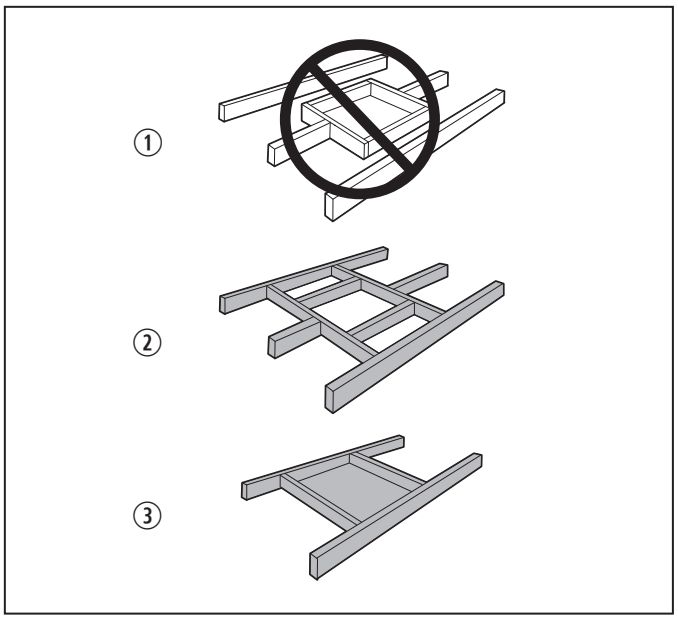

7 Structure for a new roof opening

1 Incorrect
2 Correct
3 Correct

3. Make sure the new opening does not compromise the roof's structural integrity.
   - Do not cut the roof structure or the rafters.
   - The rafters should remain supported by a cross beam.
   - The opening should be between the rafters.
4. Carefully cut the required roof opening.

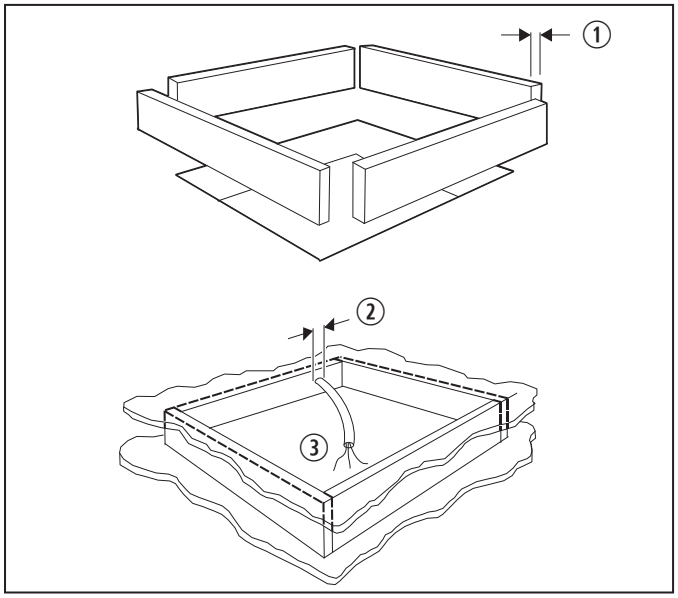

8 Structural framing for a new roof opening

1. 0.8 in. (20 mm) Minimum width for the framing stock
2. 0.3 in. (8 mm) Minimum width for access hole
3. 15.0 in. (381 mm) Exposed length of 115 VAC power supply wire

5. Frame the opening so it will not collapse when bolting the rooftop component down.
6. At the front of the frame opening, leave or create an access hole to allow for the length of exposed 115 VAC power supply wiring, thermostat wiring, and 12 V supply required to complete the installation.
7. Using the roof opening as a guide, cut a matching hole in the ceiling of the RV interior.

7.4 Routing the supply wiring to the roof opening

The power must be on an appropriately-sized separate time-delay fuse or circuit breaker. See "Specifications" on page 9.

This section describes how to route the wiring for the rooftop component.

7.4.1 Routing the VAC power supply wire

1. Route the 115 VAC power supply wire, with ground, from the time-delay fuse or circuit breaker box to the roof opening. Use a listed/certified non-metallic sheathed single strand cable. See "Specifications" on page 9.

   If an AC or a vent fan were removed, the existing power supply wire may be used provided it is of the proper type, size, and location, and if it is correctly fused.

2. Make sure at least 15.0 in. (381 mm) of the 115 VAC power supply wire extends into the roof opening to ensure an easy connection at the junction box.

7.4.2 Routing the VDC power supply wire

1. Choose one of the following options to route the 18 to 22 AWG VDC power supply wire:
   - For an independent 12 VDC power supply, route the wire from the filtered side of the RV converter or from the battery to the roof opening.
   - For an RV-C 12 VDC power supply, route the wire from the vehicle RV-C bus to the roof opening.
2. Make sure that at least 15.0 in. (381 mm) of the 12 VDC supply wire extends into the roof opening.

7.4.3 Routing the thermostat communication cable

1. Route an 8-conductor, RJ-45 communication cable from the roof opening to the thermostat mounting location.

   For RV-C bus communication, where a multiplexer will control the AC, route two 18 to 22 AWG conductors to the roof opening from the bus.

2. Make sure at least 15.0 in. (381 mm) of the cable extends into the roof opening and 6.0 in. (152 mm) extends from the wall at the thermostat mounting location. See "Preparing the thermostat opening" on page 11.

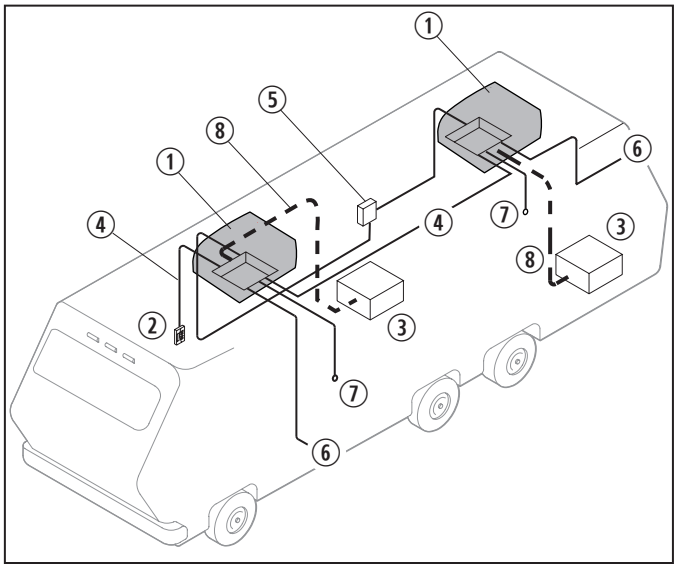

9 RV structure

① Air conditioner
② Thermostat
③ Furnace (optional)
④ Thermostat communication cable
⑤ Breaker box
⑥ 12 VDC input
⑦ Temperature sensor (optional)
⑧ Furnace wires

3. If you use more than one rooftop component to manage multiple zones with an INC1015RD thermostat, you must also complete the following actions:
   a. Route an additional 8-conductor, RJ-45 communication cable to the roof opening for each additional rooftop component.

      For RV-C bus communication, where a multiplexer will control multiple air conditioner devices: route two 18 to 22 AWG conductors from the bus to the roof opening of each AC.

   b. Make sure that at least 15.0 in. (381 mm) of the wire extends into the roof opening.
4. Protect all the wires where they pass into the opening, according to local and national standards.

7.4.4 Routing the furnace wire

Use of furnace 12 V wire for the 12 V supply of the AC control board is not approved.

If your system includes a gas furnace, you must complete the following steps:

1. Route two 18 AWG wires from the furnace to the roof opening of the rooftop component that will control the furnace.
2. If your system will use more than one furnace, route a second set of 18 AWG wires from the second furnace to the second rooftop component.

7.4.5 Routing the indoor temperature sensor wire (optional)

If your system includes an indoor temperature sensor, you must complete the following actions:

1. Route the optional indoor temperature sensor wire from the roof opening to the indoor temperature sensor location.
2. Route the 2-pin connector end of the wire to the roof opening.
3. Follow the indoor temperature sensor's installation instructions for proper installation.

7.4.6 Routing the load shed wire (optional)

If you will use an Energy Management System (EMS), or load shed feature, with the thermostat, you must complete the following:

1. Route two EMS wires to the roof opening of the zone to manage.
2. Terminate each wire with a 2-pin Molex Mini-Fit Jr. receptacle.

   The signal normally required for this function is an open relay contact. When the EMS calls for the compressor to shut off, the relay contacts should close.

3. Make sure that at least 15.0 in. (381 mm) of the EMS wire extends into the roof opening.

7.4.7 Routing an automatic generator start (AGS) feature via RV-C (optional)

If installing an AGS feature, you must complete one of the following actions:

- If the generator is equipped with RV-C communication capabilities and an AGS device:
  1. Ensure that the generator and AGS device are configured on the network.
  2. Set the values relevant to the AGS as prescribed by the RV-C specifications.
- If the generator is equipped with RV-C communication capabilities but not equipped with an AGS device:
  1. Install an RV-C compliant AGS interface device on the network.
  2. Set the values relevant to AGS as prescribed by the RV-C specifications.

7.5 Positioning the rooftop component

NOTICE: Do **not** slide the rooftop component along a surface or damage to the gasket on the bottom of the rooftop component could occur and cause a leak.

1. Remove all the contents from the carton and discard the carton.
2. Place all the ADB kit contents in the RV. The ADB kit contains mounting hardware for the ADB that will be installed inside the RV.
3. Move the rooftop component to the roof.

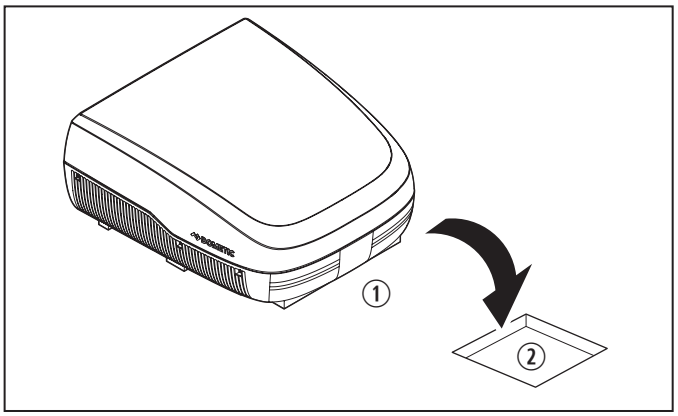

10 Placing the Rooftop Component

① Front of the rooftop component ② Roof opening

4. Lift and place the rooftop component over the prepared opening using the gasket on the rooftop component as a guide.

The outside work is complete. Minor adjustments can be made from inside the RV if required.

7.6 Preparing to work inside the RV

This section describes the interior preparation.

1. Confirm the ADB kit is inside the RV.

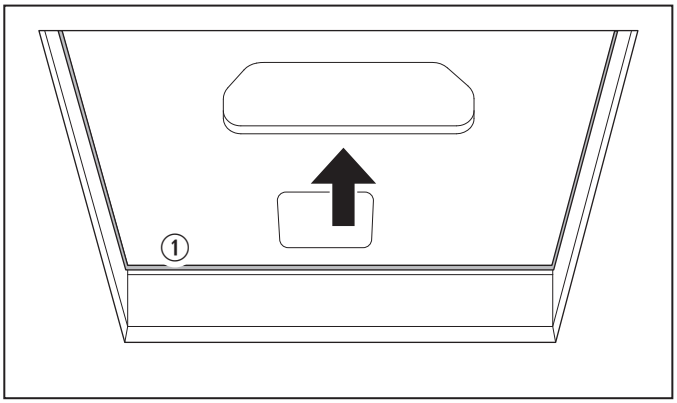

11 Centering the rooftop component from inside the RV

① Roof gasket

2. From inside the RV, check the gasket alignment of the rooftop component over the roof opening. If necessary, adjust the rooftop component from below by gently pushing up.

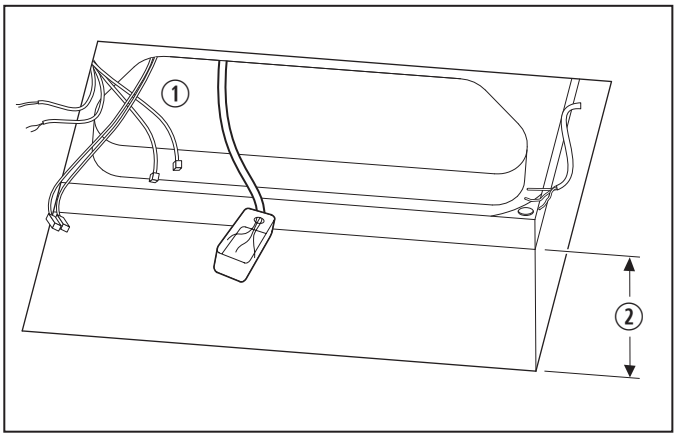

12 Return Air Opening

① Wiring harness ② Ceiling thickness

3. Reach up into the return air opening of the rooftop component and pull down the rooftop component's electrical cord and wiring harness.
4. If the rooftop component has a built-in board, complete the following:
   a. Mount the junction box to the framing in front of the roof opening, using the installer-supplied screws.
   b. Install the strain relief.

8 Installation

WARNING: FIRE OR ELECTRICAL SHOCK HAZARD. Failure to obey these warnings could result in death or serious injury.

- Shut off the gas supply, disconnect the 115 VAC power from the RV, and disconnect the positive (+) 12 VDC terminal from the supply battery before drilling or cutting into the RV.
- Provide grounding in compliance with all applicable electrical codes.

This section describes how to install and mount the wall thermostat and optional sensor.

8.1 Installing and wiring the thermostat and optional sensor

To install the wall thermostat, choose one of the following options based on the type of wiring.

- "Using RJ-45 Wire to Supply Communication to the Thermostat" on page 16, or
- "Using RV-C BUS and Multiplexer to Supply CAN Communication to the AC" on page 17.

8.1.1 Using RJ-45 Wire to Supply Communication to the Thermostat

If installing non twisted pair cable, go to "Using RV-C BUS and Multiplexer to Supply CAN Communication to the AC" on page 17.

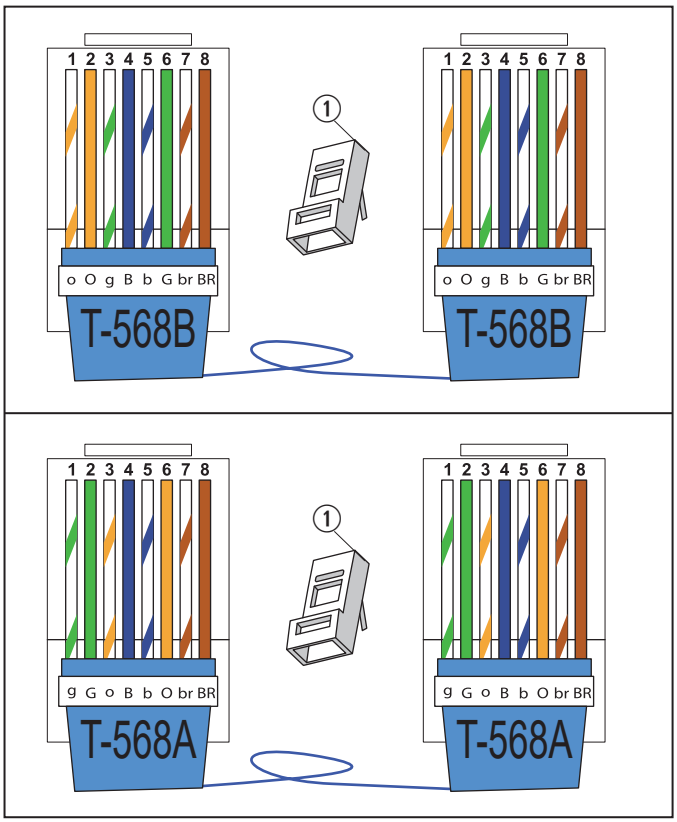

13 Connecting the RJ-45 plugs to the communication cable(s)

① Pin 1

1. Terminate the previously run 8-conductor communication cable with two RJ-45 plugs using a crimping tool. Refer to the crimping tool manufacturer for instructions. See "Routing the thermostat communication cable" on page 13.

The pins of both RJ-45 plugs must match: pin 1 must connect to pin 1 on the other connector, pin 2 must connect to pin 2 on the other connector, and continuing for all remaining pins. Pins 3 and 6 must be twisted at minimum rate of 25 twists per 39 in. (1 m).

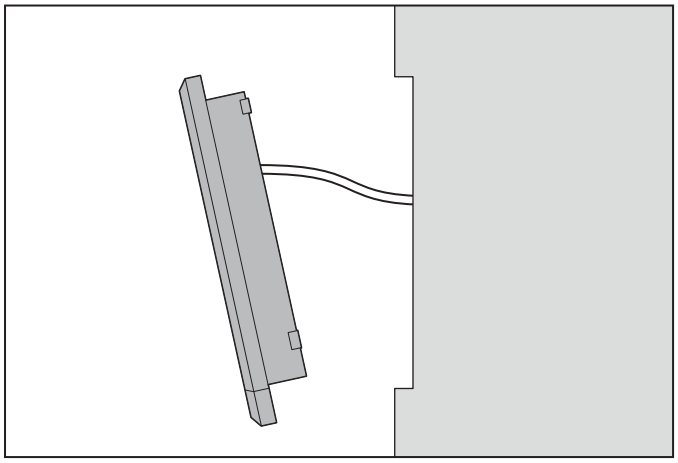

14 Wiring to the thermostat

2. Insert the 8-conductor communication cable through the hole in the base plate.

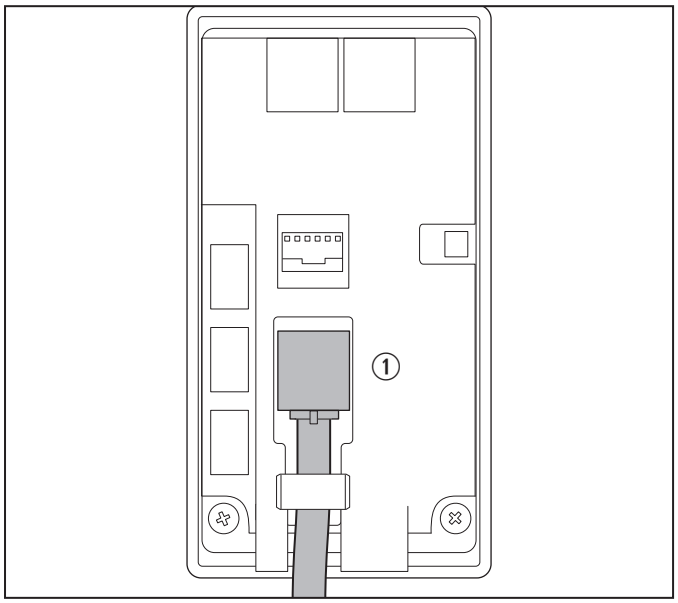

15 RJ-45 connector

① RJ-45 cable connector

3. Insert the RJ-45 connector into the RJ-45 jack on the back of the thermostat.
4. Go to "Mounting the thermostat" on page 17 to install the thermostat onto the wall.

8.1.2 Using RV-C BUS and Multiplexer to Supply CAN Communication to the AC

If installing RJ-45 wiring, go to "Using RJ-45 Wire to Supply Communication to the Thermostat" on page 16.

1. Cut back the outer cable shield 3.0 in. (76 mm) and strip 0.3 in. (7.6 mm) of insulation from each wire.

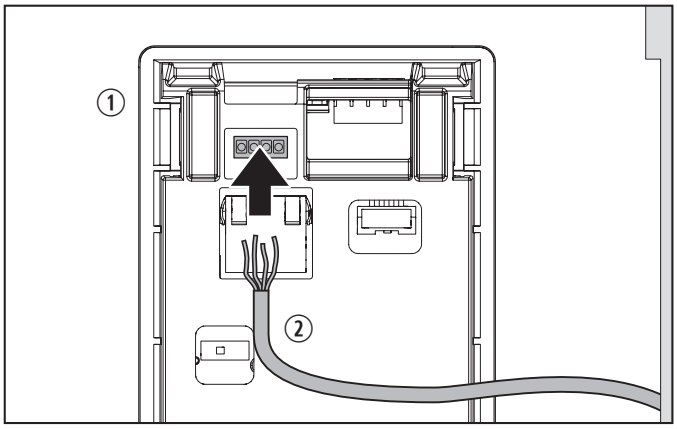

16 Connecting the thermostat communication cable plug to the thermostat terminal block

① Thermostat terminal block ② Thermostat communication cable

2. Terminate the wires with the appropriate plug for the multiplex system using the correct pin assignments below:
   a. Connect Pin 1 to the (+) 12 V terminal.
   b. Connect Pin 2 to the GND terminal.
   c. Connect Pin 3 to the CAN_H (CAN Hi) terminal.
   d. Connect Pin 4 to the CAN_L (CAN Lo) terminal.
3. Inspect all the connections to make sure they are tight and not touching any other terminals or wires.

8.1.3 Mounting the thermostat

1. Avoid pinching or bending the connected wiring cable(s) and tuck the cable(s) into the wall opening.

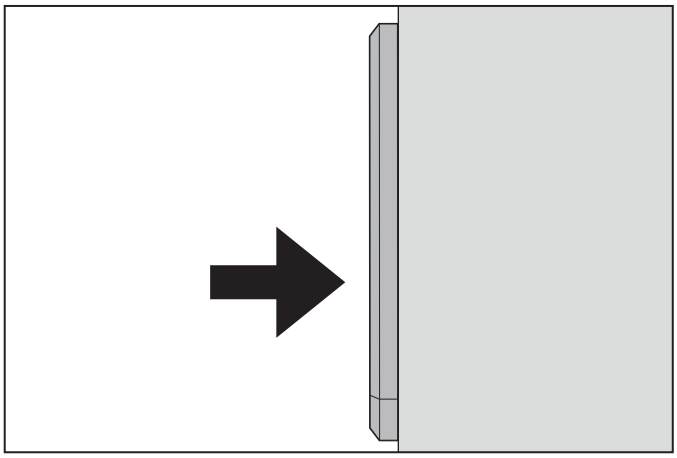

17 Mounting the thermostat

2. Insert the top edge of the display into the cutout.
3. Applying pressure over the Dometic logo, push the bottom edge of the display until the entire display is flush with the edges of the cutout. The display should fit tightly into the cutout.
4. To install the optional indoor temperature sensor, refer to the instructions provided with the indoor temperature sensor.

8.2 Installing the electronic control box

This section describes how to connect the power supply and low-voltage wiring to the electronic control box.

8.2.1 Connecting the 115 VAC power supply to the junction box

1. Route the previously run 115 VAC power supply wire from the rooftop component through a strain relief and into the junction box.
2. Tighten the strain relief making sure not to damage the wires. Leave enough wire inside the junction box to connect to the rooftop component's 115 VAC wires.
3. Connect the white neutral wires together, using appropriately-sized connectors.
4. Connect the black live wires to each other, using appropriately-sized connectors.
5. Connect the bare copper wire to the green/yellow wire, using appropriately-sized connectors.
6. Ensure the connectors to the 115 VAC power supply wire are secured so they do not vibrate loose.

8.2.2 Connecting the low voltage wire to the electronic control box

NOTICE: Make sure the positive (+) 12 VDC terminal is disconnected from the supply battery. Otherwise, damage to the unit could occur.

1. If using independent RJ-45 wire:
   a. Connect the previously run (+) 12 VDC supply wire protruding from the roof opening to the (+) 12 VDC red wire at the electronic control box.
   b. Connect the previously run (–) 12 VDC supply wire protruding from the roof opening to the (–) 12 VDC black wire at the electronic control box.
2. If using the RV-C BUS and multiplexer, plug the 4-pin receptacle into the 4-pin plug labeled CAN-BUS on the electronic control box. See "Using RV-C BUS and Multiplexer to Supply CAN Communication to the AC" on page 17.
3. Connect the previously run furnace thermostat wires protruding from the roof opening (if applicable) to the blue wires at the electronic control box. The polarity of these connections does not matter.
4. If you performed "Using RJ-45 Wire to Supply Communication to the Thermostat" on page 16, plug the RJ-45 cable into either RJ-45 jack on the electronic control box labeled as CAN/CMC. If more than one zone is used, the second jack is used to join each additional zone.
5. Plug the indoor temperature sensor cable (if applicable) into the 2-pin plug labeled ROOM SENSOR on the electronic control box.
6. If equipped with an Energy Management System, terminate the previously run Energy Management System wires with a 2-pin Molex Mini-Fit Jr. receptacle.
7. Plug the 2-pin Molex Mini-Fit Jr. receptacle into the 2-pin plug labeled as LOAD SHED on the electronic control box. The polarity of this connection does not matter.

8.3 Configuring the electronic control box

This section describes how to set the DIP switches for your unit's electronic control box and to complete the system reset.

8.3.1 Locating the DIP switches

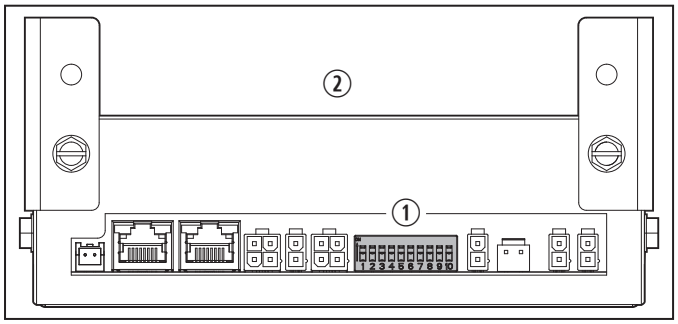

18 Electronic control box DIP switch location

① DIP switch ② Electronic control box

The electronic control box is located at the return air opening on the base of the AC and the DIP switches are visible through the opening.

The DIP switches are set to the Off position (except for the 120 ohm switch) when shipped from the factory. Heat pump models will have the appropriate switch selected in the On position. Placing the switch in the On position selects that option.

8.3.2 Setting the DIP switches

This section describes the appropriate electronic control box DIP switch settings. The position should be set to the appropriate On or Off position based on the equipment options installed by the RV manufacturer.

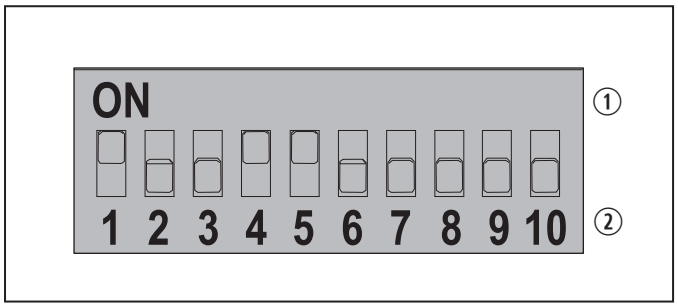

19 DIP switch board

① On or closed switch position

② Off or open switch position

If your RV has more than one electronic control box installed, configure each electronic control box with the appropriate DIP switch settings.

If necessary, press each switch On (Closed) or Off (Open) according to the following configuration table.

DIP switch setting configuration		
DIP location		**Description**
1	Zone 2	Each thermostat can have up to four zones. If only one rooftop component is installed, it becomes zone 1 by default and DIP switch settings for zones 2, 3, or 4 are not required. If more than one rooftop component is installed, assign each rooftop component a separate zone (2 through 4). Each rooftop component must have a different zone setting.
2	Zone 3	
3	Zone 4	
4	Stage	For applications requiring two rooftop components to work together in the same zone, set the Stage DIP switch to the On position. Otherwise, leave in the Off position.
5	Furnace[1]	If a Furnace/Hydronic heating system has been connected to this rooftop component, set the Furnace DIP switch to the On position. Otherwise, leave in the Off position.
6	Gen Start[1]	To configure the Automatic Generator Start for a new installation, refer to "Routing an automatic generator start (AGS) feature via RV-C (optional)" on page 15. Leave this DIP switch in the Off position, unless it is required for backwards compatibility using the CMC protocol.
7	Heat Strip[1]	Leave this DIP switch in the Off position, unless it is required for backwards compatibility using the CMC protocol.
8	Heat Pump	For Heat Pump models, this DIP switch is set in the On position from the factory. For non-Heat Pump models, change this DIP switch to the Off position.
9	Dehumidify[1]	The Dehumidify is not used on this rooftop component. Leave this DIP switch in the Off position, unless it is required for backwards compatibility using CMC protocol.
10	120 ohm CAN termination resistor	This DIP switch is in the On position from the factory to enable RV-C (CAN BUS) communication. Only the first and last devices on the CAN bus should enable the 120 ohm termination resistor.

[1] Climate Module Communication (CMC) only

8.4 Installing the foam dividers

Roof thicknesses vary among RVs and the ADB installation may require additional foam to fill any gaps in thicker roofs.

This section describes how to determine if additional foam dividers are required, the number required, and the installation method.

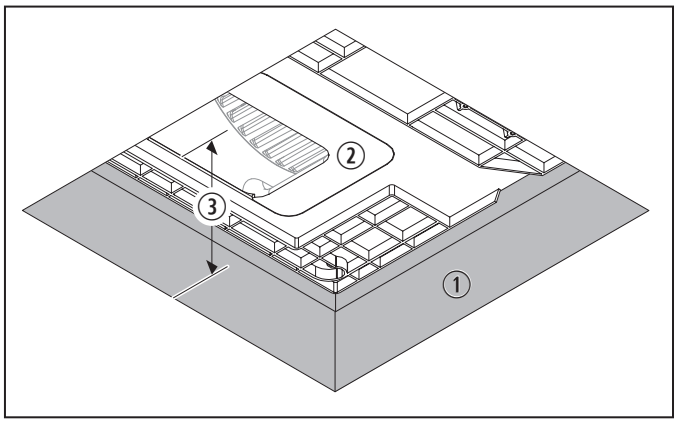

20 Measuring the roof thickness for foam divider installation

① Ceiling opening
② Rooftop model unit basepan
③ Roof thickness

1. Inspect the ADB and the mounting hardware placed inside the RV at the beginning of "Positioning the rooftop component" on page 15. See "ADB components" on page 6 for the parts configuration.
2. Measure the roof thickness, from a flat surface of the installed rooftop component's basepan to the ceiling opening inside the RV.

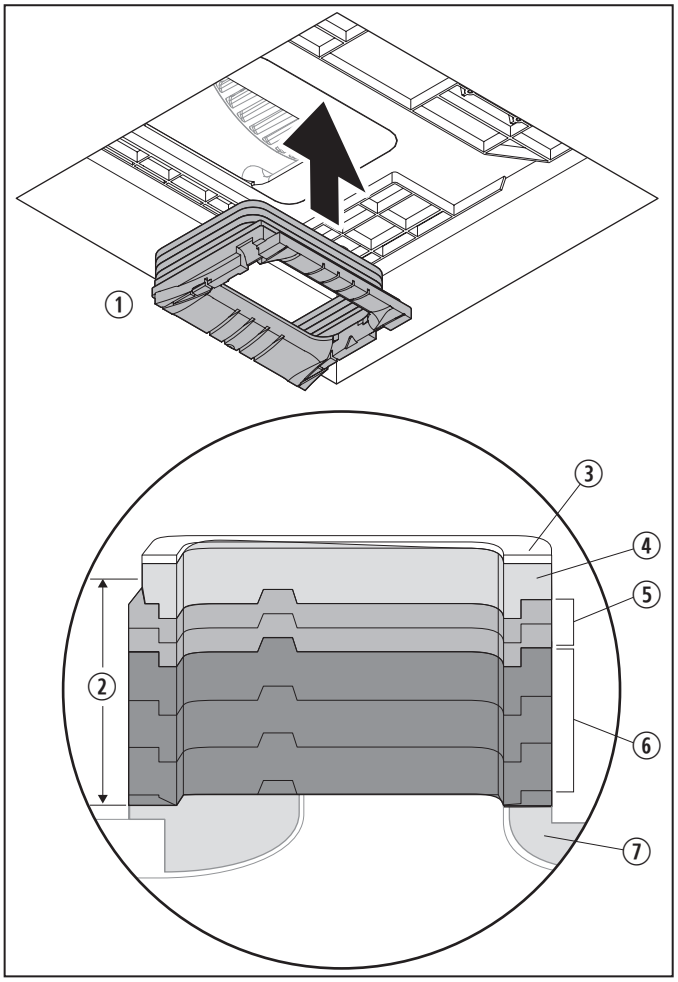

21 Stacking the foam dividers and placement location

① Stacked foam dividers
② Roof thickness
③ Top foam - 0.4 in. (10 mm) (1)
④ Top foam ring - 0.4 in. (10 mm) (1)
⑤ Foam divider - 0.4 in. (10 mm) (2)
⑥ Foam divider - 1.2 in. (30 mm) (3)
⑦ ADB adaptor (1)

3. Identify the different types and sizes of foam dividers.
4. Using the tables in "Roof thickness 6.0 to 7.5 in. (152 to 191 mm)" on page 23 and in "Roof thickness 1.25 to 5.5 in. (32 to 140 mm)" on page 22, determine the number and combination of foam dividers required based on the roof thickness.

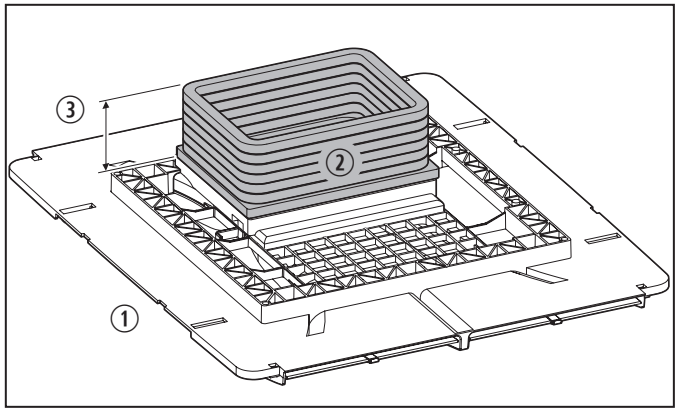

22 Confirming the foam divider height measurement

① Flat surface of the ADB
② Stack of foam dividers
③ Full height measurement (equal to the roof thickness)

5. Place the ADB face down on a stable, protected, flat surface.
6. Stack the foam dividers required and place them onto the ADB.
7. Measure the full height, from the flat surface of the ADB to the top of the foam dividers to confirm the full height is equal to the previously determined roof thickness.
8. Adjust the number of foam dividers to reach the correct full height, as necessary.

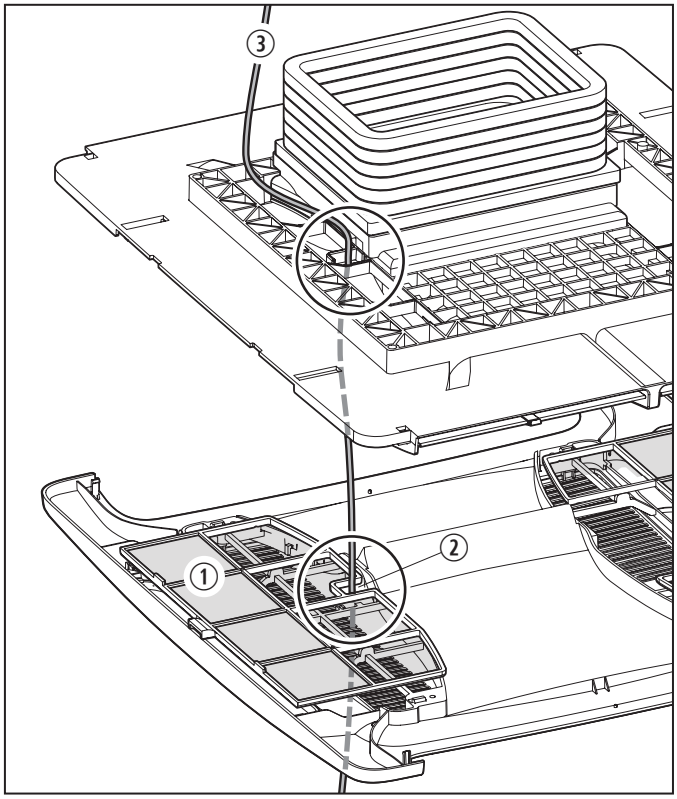

23 Passing the wire through the filter notch

① Filter
② Filter notch
③ 2-Conductor light cable

9. Slide out the filter to expose the filter notch.
10. Pass the 2-pin lighting cable (if equipped) through the filter notch.

Roof thickness 1.25 to 5.5 in. (32 to 140 mm)

All models[1]										
Roof thickness	1.25 in. (32 mm)	1.5 in. (38 mm)	2.0 in. (51 mm)	2.5 in. (64 mm)	3.0 in. (76 mm)	3.5 in. (90 mm)	4.0 in. (102 mm)	4.5 in. (114 mm)	5.0 in. (127 mm)	5.5 in. (140 mm)
Total divider thickness	1.7 in. (50 mm)	2.4 in. (60 mm)	2.8 in. (70 mm)	3.5 in. (90 mm)	3.9 in. (100 mm)	4.3 in. (110 mm)	4.7 in. (120 mm)	5.5 in. (140 mm)	5.9 in. (150 mm)	6.3 in. (160 mm)
Top foam 0.4 in. (10 mm)	X	X	X	X	X	X	X	X	X	X
Top foam ring 0.4 in. (10 mm)	X	X	X	X	X	X	X	X	X	X
Foam divider 0.4 in. (10 mm)		X	X	X	X		X		X	X
Foam divider 0.4 in. (10 mm)			X		X					X
Foam Divider 1.2 in. (30 mm)				X	X	X	X	X	X	X
Foam divider 1.2 in. (30 mm)						X	X	X	X	X
Foam divider 1.2 in. (30 mm)								X	X	X
ADB adaptor 1.2 in. (30 mm)	X	X	X	X	X	X	X	X	X	X

[1] Up to 0.4 in. (10 mm) of compression of the foam dividers is acceptable and may be required in some instances.

Roof thickness 6.0 to 7.5 in. (152 to 191 mm)

All models[1]				
Roof thickness	6.0 in. (152 mm)[2]	6.5 in. (165 mm)[2]	7.0 in. (178 mm)[2]	7.5 in. (191 mm)[2]
Total divider thickness	7.0 in. (180 mm)	7.5 in. (190 mm)	7.9 in. (200 mm)	8.3 in. (210 mm)
Top foam 0.4 in. (10 mm)	x	x	x	x
Top foam ring 0.4 in. (10 mm)	x	x	x	x
Foam divider 0.4 in. (10 mm)	x	x		x
Foam divider 0.4 in. (10 mm)		x		
Foam divider 1.2 in. (30 mm)			x	x
Foam Divider 1.2 in. (30 mm)	x	x	x	x
Foam divider 1.2 in. (30 mm)	x	x	x	x
ADB adaptor 1.2 in. (30 mm)	x	x	x	x
Spare[2] foam divider 1.2 in. (30 mm)	x	x	x	x
Spare[2] foam divider 1.2 in. (30 mm)	x	x	x	x

[1] Up to 0.4 in. (10 mm) of compression of the foam dividers is acceptable and may be required in some instances.

[2] To accommodate a roof thickness greater than 5.5 in. (140 mm), order the optional accessory kit. See "Tools and materials" on page 5.

8.5 Securing the ADB

NOTICE: Overtightening could damage the base pan or ceiling template. Not enough torque will cause an inadequate roof seal, and could cause a leak.

All models in this manual use a four-bolt pattern to secure the ADB kit.

This section describes how to secure the ADB to the roof.

1. For ADBs that fit within the 14.0 x 14.0 in. (366 x 366 mm) ceiling opening, press the entire ADB up toward the basepan and into the ceiling opening.
2. Use the following figures to determine the proper mounting pattern (A, B, C, D) and bolt location.

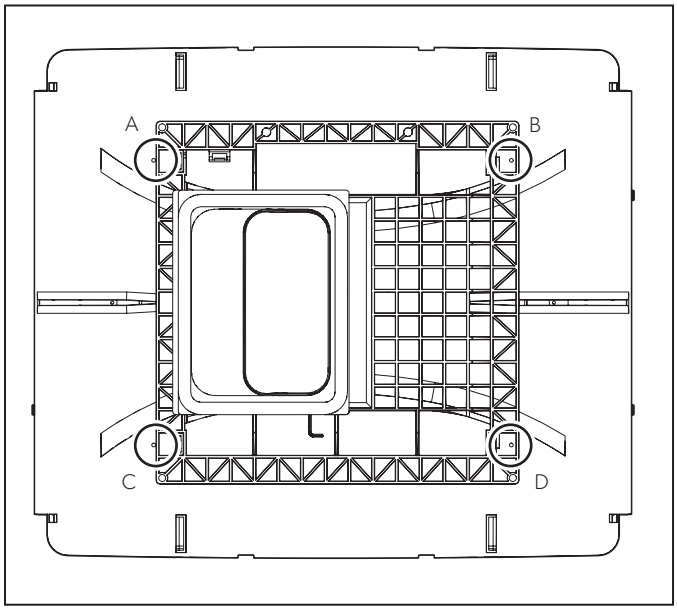

24 Mounting bolt pattern

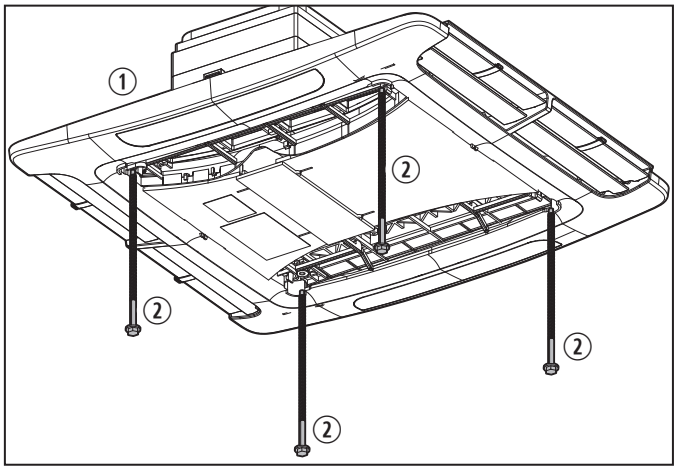

25 Mounting bolt location

① Ceiling template ② Mounting bolt

3. Start each mounting bolt by hand, through the ceiling template and up into the rooftop component base pan.
4. Tighten all four mounting bolts evenly at 22.2 in. lbs (2.5 N·m).

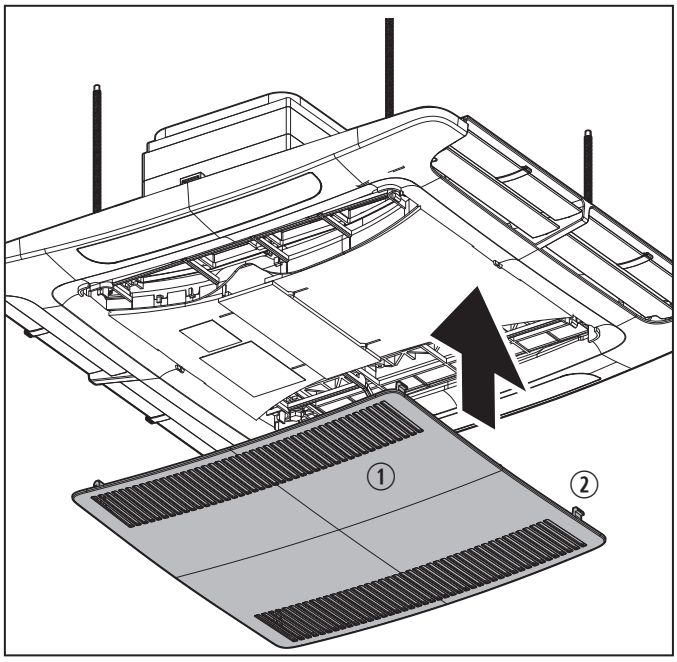

26 Attaching the center cover

① Center cover ② Clip

5. Clip the center cover to the ADB.
6. Reconnect the 12 VDC and 120 VAC power supplies and turn on the power.
7. If necessary, reconnect the gas supply.

9 System check

This section describes how to reset and/or complete a final check of the system.

9.1 Resetting the system

During a system initialization, the factory default settings are restored. All events are restored to the factory default settings. The Schedule events (if applicable) and the Timer (if applicable) are inactive. See the thermostat product manual for details.

When a DIP switch is turned On after the initial configuration, you must perform a system reset and power cycle the 12 VDC power supply before the thermostat will recognize the updated selection.

1. Be sure to complete the DIP switch setting configuration first in"Setting the DIP switches" on page 19.
2. If the INC1LED thermostat is installed, complete these actions to initialize the system:
   a. Ensure the thermostat is Off.
   b. Simultaneously, press and hold the Mode and the (+) button for three seconds.

      The LED display will show '- -' and the thermostat will transmit instructions to the controlled devices to return to their original factory default settings.
   c. Release the Mode and the (+) button.
   d. To exit, press the On/Off button, which causes the thermostat to enter Low/Power mode.
   e. Go to "Checking out the system" on page 25.
3. If the INC2015RD thermostat is installed, complete these actions to initialize the system:
   a. Ensure both the thermostat and the thin film transistor (TFT) display are Off.
   b. Simultaneously, press and hold the Favorite and Confirm buttons. The TFT will show INIT and the zones that are available on the system.
   c. Release the Favorite and Confirm buttons.
   d. To exit, press the On/Off button.

e. Continue to "Checking out the system" on page 25).

9.2 Checking out the system

See the thermostat operating instructions for details.

1. Verify the system features function properly.
2. Verify the operation of all applicable modes, including: Auto, Cool, Fan, and Heat.
3. If a feature does not work correctly:
   a. Disconnect the 120 VAC and 12 VDC power supplies.
   b. Verify all the wiring is correct and the correct DIP switches are set to the On position.
   c. Perform a system reset.

10 Operation

See the operating instructions for your thermostat model to learn how to use the thermostat.

11 Maintenance

This section describes routine activities to maintain properly-working system components.

11.1 Cleaning the air filter

NOTICE: **Never** run the unit without the return air filter in place. Otherwise, dirt will accumulate and may substantially degrade the performance of the unit over time.

This section describes how to maintain a clean air filter.

1. Periodically (or at a minimum of every two weeks of operation) remove the return air filter located behind the return air vent grille and wash it with soap and warm water.
2. Let the return air filter dry completely before placing the return air filter back into position.

11.2 Cleaning the ADB

NOTICE: **Never** use furniture polish or scouring powders to clean the outside shell of the ADB.

Clean the outside shell of the ADB with a soft cloth dampened with a water and mild detergent solution.

11.3 Servicing the blower

The blower motor in the rooftop component is factory-lubricated and requires no service.

12 Troubleshooting

The following table describes common occurrences that are not a result of defective workmanship or materials.

Problem	Possible cause	Suggested remedy
The product does not operate.	The circuit breaker has activated.	Set or reset the circuit breaker.
	A fuse has blown.	Replace the fuse.
	The heat pump is disabled (if equipped).	The heat pump does not operate when the outside ambient temperature is below 40 °F (4 °C).
	The heat mode icon is missing from the display.	The heat source is not selected on the dip switch.
The product does not operate (or operates poorly) and the RV is connected to the motor generator.	The RV is not receiving power from the motor generator.	Confirm the motor generator is running.
		Confirm the motor generator is producing power.
		Confirm the fuse or circuit breaker is open. Ensure the fuse is not blown, or circuit breaker is on and not activated.
		Contact the local service center.
The product does not operate (or operates poorly) and the RV is connected to a power supply by a land line.	The RV is not receiving power from the power supply.	Confirm the land line is plugged into the power supply.
		Confirm the land line is properly sized for the product's power load.
		Contact the local service center.
Frost forms on the evaporator coil, as visible through the air inlet hole with the filter removed.	The product is producing very cold output at a very low air speed.	Inspect and clean the filter.
		Open the air vents and remove any obstructions.
	The outside temperature is relatively low.	Adjust the thermostat to a warmer setting.
		Operate the product on any Fan Only setting until the coil is free of frost.
		Contact the local service center.
The product does not maintain the desired temperature.	The product is affected by the RV's heat gain from high outdoor temperatures or humidity.	Park the RV in a shaded area.
		Use window shades, blinds, or curtains.[1]
		Keep the windows and doors closed or minimize their use.
		Avoid using heat-producing appliances inside the RV.
		Operate the product in the **Turbo Fan**/**Cool** mode.
		Start the product before the outside temperature increases.
		Install an ambient temperature sensor.
Condensation forms on ceilings, windows, or other surfaces.[2]	The air contains water vapor that is below the dew point of the surface.	Keep doors and windows closed when the unit is in operation to reduce the formation of condensation.
The fan is running while the furnace is on.	A manual fan speed is selected.	Select Auto Fan mode.

[1] For a more permanent solution to high heat gain, accessories like the Dometic outdoor patio or window awnings reduce the effects of direct sunlight.
[2] During normal operation, this product is designed to remove a certain amount of moisture from the air, depending on the size of the space being conditioned. The manufacturer of this unit will not be responsible for damage caused by condensation forming on ceilings, windows, or other surfaces.

13 Disposal

Place the packaging material in the appropriate recycling waste bins, whenever possible. Consult a local recycling center or specialist dealer for details about how to dispose of the product in accordance with all applicable national and local regulations.

LIMITED ONE-YEAR WARRANTY

LIMITED ONE-YEAR WARRANTY AVAILABLE AT DOMETIC.COM/EN-US/TERMS-AND-CONDITIONS-CONSUMER/WARRANTY.

IF YOU HAVE QUESTIONS, OR TO OBTAIN A COPY OF THE LIMITED WARRANTY FREE OF CHARGE, CONTACT:

DOMETIC CORPORATION
CUSTOMER SUPPORT CENTER
5155 VERDANT DRIVE
ELKHART, INDIANA, USA 46516
1-800-544-4881 OPT 1

DOMETIC

dometic.com

YOUR LOCAL DEALER

dometic.com/dealer

YOUR LOCAL SUPPORT

dometic.com/contact

YOUR LOCAL SALES OFFICE

dometic.com/sales-offices

3317883.000 4445104130 54-632-MA04 4450026413 2023-10-11