hydro flame™ Furnace Table of Contents

- **Recommended Tools & Equipment** 2
- **79/80 Series**
  - Model Identification 3
  - 79-II Directional Air Box Insert 4
- **85 Series**
  - Model Identification 5
- **89 Series & 2-Stage Model**
  - Model Identification 6
- **Wiring Diagrams**
  - 7900-II/8000-II Series 7
  - ACCS 8
  - 8500 Series 9-10
  - 8900-III Series & 79 / 85 / 89 with blower control ignition board 11
  - 2-Stage Furnace & Diagnostic Chart 12
- **Sequence of Operation**
  - DC Models 13
  - DC Models (standard 1-Stage) 14
  - Pilot Models 15
  - AC Models 16
  - DC Models (2-Stage Excalibur™) 17
- **Safety, Warnings & Annual Preventative Maintenance Inspection** 18
- **Model 1H2C Digital Thermostat** 19
- **Model 2H2C Digital Thermostat** 20
- **Furnace Parts**
  - Mechanical Thermostat 21
- **Trouble Shooting Guide**
  - Thermostat 22
- **Furnace Parts**
  - Circuit Breaker & Motor 23
  - Circuit Boards 23
  - Relay 24
  - Sail Switch 24
  - Limit Switch 24
  - Dual Solenoid Gas Valve 25
  - Burner Head, Electrode & Valve Assembly 25
  - The 4 Always (Gas Pressure, Voltage, Ducting, Return Air) 26-27
- **Quick Diagnostics for 2-Stage Furnaces** 28
- **Trouble Shooting Guides**
  - Electronic Ignition Models 29-30
  - Pilot Model 31-32
- **Furnace Terminology** 33-34
- **Furnace Parts Breakdowns**
  - 7900-II/8000-II Series 35
  - 8500-III Series 36
  - 8500-IV Series 37
  - 8500-IV LD Series 38
  - 8900-III Series 39
  - 8900-III LD Series 40
  - 2-Stage 8500-IV Model 1522 & 2334 41
  - 2-Stage 8500-IV LD Model 1522 & 2334 42
  - 2-Stage 8900-III Model 2540 43
  - 2-Stage 8900-III LD Model 2540 44
- **Replacement Part Reference**
  - 85-IV 16, 85-IV 20, 85-IV 25, 85-IV 31, 85-IV 35, 1522, 2334 2-STAGE & R-25 45-47
  - 7912-II, 7900-II 16 & 20, 8012-II, 85-III 16-20, 85-III 25, 85-III 31-35, 89-III DC, 89-III AC, 2540 2-STAGE 48-51
  - 85-II 16-20, 85-II 25, 82-II 31-35, 89-I DC, 89-I AC, 89-II DC, 89-II AC, FA 79D, FA 79P, HF 80D, HF 80P 52-54
  - 85-I 16-20, 85-I 25, 85-I 31-35, DC82 25-32, DC82 35-41, AC 82, FA 76D, FA 78 25-32, FA 72D, FA 72P 55-56
- **Atwood Furnace Installation Parts** 57-58

Recommended Tools and Equipment

U-Tube Manometer - This is the most accurate device for measuring gas pressure. If you use a dial-type manometer, it should be calibrated periodically with this type of manometer.

Slack Tube Manometer - A more portable U-Tube Manometer.

Multi-meter - This is the most effective meter capable of reading voltage, amperage and continuity. A test light cannot give you specific enough information to trouble-shoot a furnace properly.

U-TUBE MANOMETER
with 1/8" pipe nipple

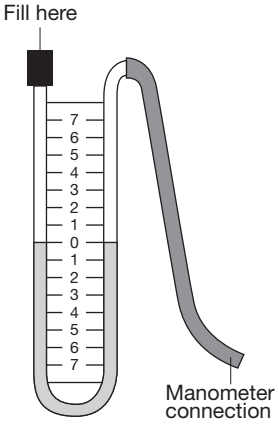

VOLT OHM-AMP METER

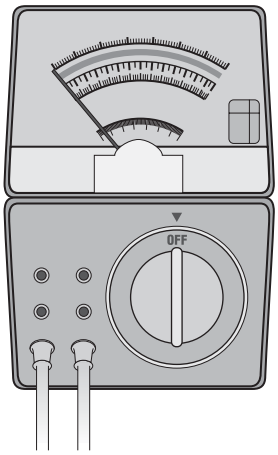

Circuit Board Tester - P/N 32779 - This is a table top device that will test all furnace circuit boards. It will specifically test the following board functions: power, spark, lamp, sense and valve. It will test Fenwal and Channel circuit boards.

CIRCUIT BOARD TESTER

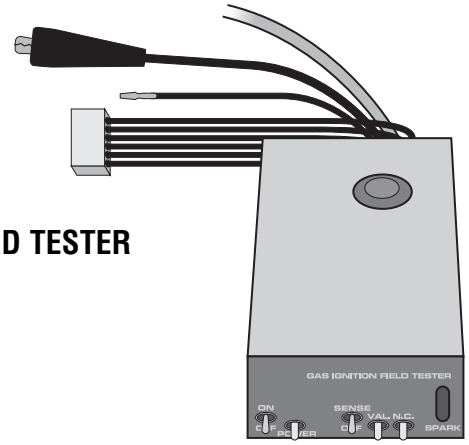

Air Speed Indicator - This hand held device will let you determine air flow out of a heat register. It will help you isolate restricted ducting.

Incline Manometer - This meter measures the static pressure of the furnace cavity. It provides an x-ray of the total heating system. It will indicate if all of the heat being produced by the furnace is being sufficiently distributed out to the heat registers.

Long-handled Allen Wrenches (9/64˝ and 1/8˝) - These two wrenches are necessary to remove the blower wheel and the combustion wheel.

Common Hand Tools - 1/4˝ nut drivers, open end wrenches, flat blade and Phillips screw drivers.

Leak Test Solution - A solution that bubbles when applied to gas fittings or connections showing where a gas leak is present.

79 / 80 Series Model Identification

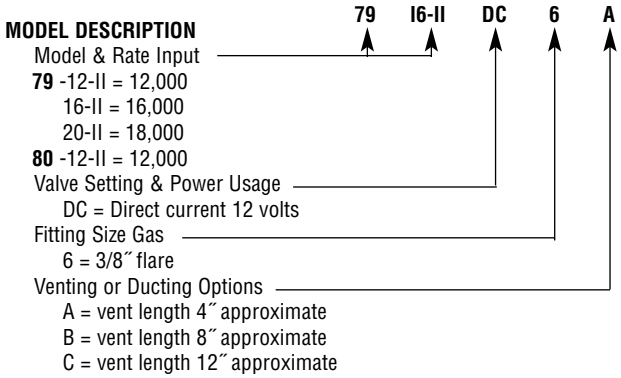

Applications - This unit is typically installed in tent campers, truck campers and small travel trailers due to its small size and lower BTU capacities. It is sometimes used in larger trailers or motor homes for smaller zone heating.

Heat Outlets - This furnace is usually set up as a front discharge unit. However, it does have a 4" duct outlet on either side of its casing for soft ducting to remote outlets. To determine the most efficient ducting configuration, refer to **Minimum Ducting Configuration**.

Directional Air Box Insert - If you need to direct heat to the front or rear of a camper and you cannot use soft ducting and registers, an optional diverter plate with 55 degree louvers can be added to the front exhaust box.

Serviceability - Practically all of the components of this furnace are accessible by removing the front grille. Therefore, the furnace does not need to be removed for most repairs. The only components that are not accessible without removing the furnace are the blower motor, sail switch and blower and combustion wheels.

Power Consumption - The 79 series furnace draws only 3.4 amps. However, there is an 8012 series furnace that has a heating capacity of 12,000 BTU's and only draws 1.8 amps. This furnace is ideal for dry camping.

MINIMUM DUCTING CONFIGURATION

7912-II 7916-II 7920-II - SIDE DISCHARGE UNITS - Provides the most air flow and heat to remote heat outlets. The duct runs need to be as short and straight as possible for optimal heating.

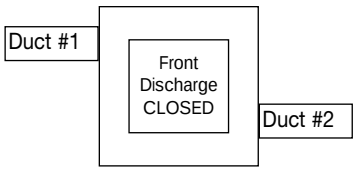

7912-II 7916-II 7920-II - SIDE DISCHARGE UNITS - with front discharge-
The majority of the heat discharges out the front. A minimal amount of heat will pass through the side ducts. These duct runs need to be as short as possible. An optional air diverter with 55° angle vanes can be added to front discharge opening to direct heat fore or aft in the trailer.

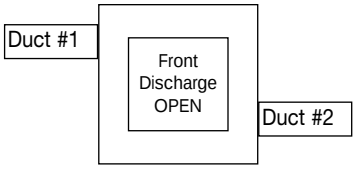

8012-II 7912-II 7916-II 7920-II - FRONT DISCHARGE UNITS - no ducts allowed on 8012-II
The heat discharges only through the front. The optional air diverter noted above can be added to front discharge opening to direct heat for or aft in the trailer.

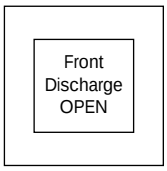

RETURN AIR REQUIREMENTS

Return air is provided through the front door grill - approximately 33 square inches (213cm^2). If the furnace is installed at zero clearance, an additional 16 square inches (103cm^2) of return air must be provided to the blower wheel side of the furnace.

79-II Directional Air Box Insert (PN 36959)

An air discharge diverter is now available for all 79 series furnaces. This insert has fins that are set at a 55 degree angle. This will allow you to direct the heat fore or aft in the camper easier.

1. Remove the front grill of the furnace.

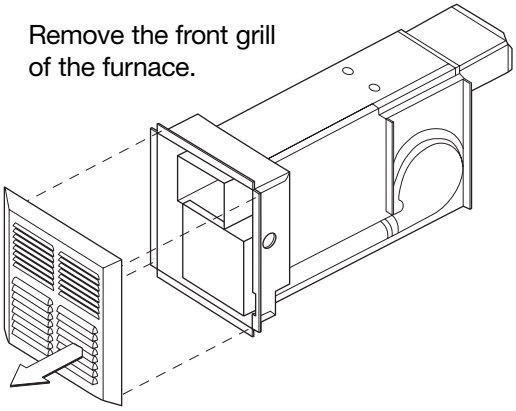

2. Follow the shutdown procedure instructions affixed to the furnace.
3. Remove the sheet metal screw that holds the circuit board plate to the air box. Retain to fasten the Air Box Insert to the bottom of the air box.

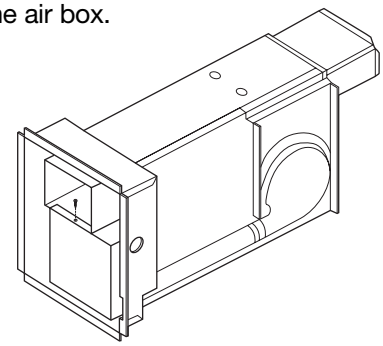

4. Install the Air Box Insert into the air box paying particular attention to the direction where you would like the warm air diverted. Make sure the two holes in the Air Box Insert line up with the existing holes in the air box.

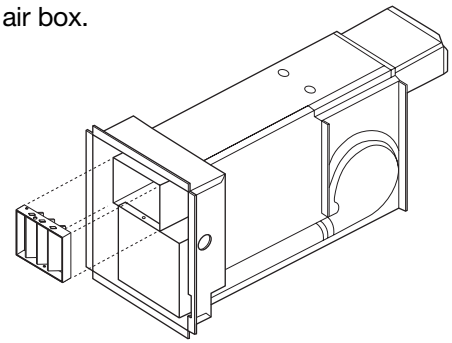

5. Fasten the Air Box Insert to the top of the air box using a 1/4″ long #6 sheet metal screw. Fasten the bottom of the Air Box Insert and the circuit board plate to the bottom of the air box using the screw removed in step 3.

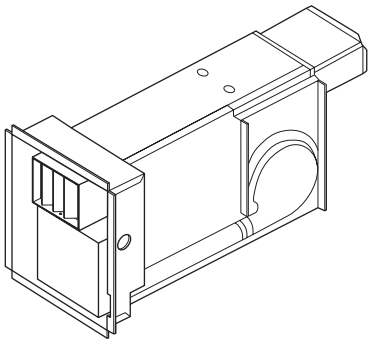

6. Follow the lighting instructions to place the furnace in operation.
7. Replace the front grill on the furnace.

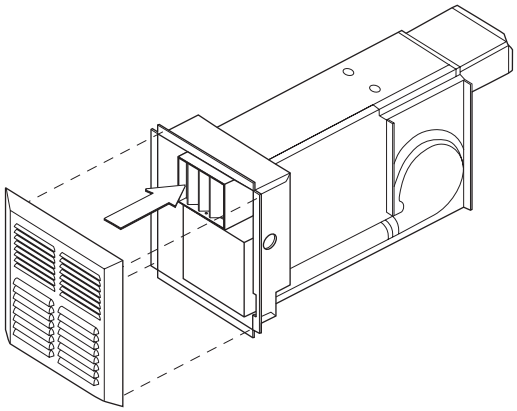

85 Series Model Identification

MODEL DESCRIPTION

85 I6-IV DC LP 6 SB w/o Therm

Model

BTU/Hr Rate (Input)
- 16-IV = 16,000
- 20-IV = 20,000
- 25-IV = 25,000
- 31-IV = 30,000
- 35-IV = 34,000

Voltage DC

Type Gas
- LP = Propane

Gas connection size
- 6 = 3/8” Flare

Options
- SB = Side/Bottom discharge
- V = Ventilator

Thermostat
- with thermostat
- w/o thermostat

NOTE: The new 85-IV series furnace, through some design changes is quieter than the previous 85 series. It incorporates some plastic components in the blower housing area to accomplish this. These components are not retro-fittable to other 85 series furnaces.

Applications - This unit is typically installed in travel trailers, 5th wheels and motor homes.

Installation - This series of furnace can be installed either vertically or horizontally. If installed vertically, the exhaust port must be located at the bottom. Extra care must also be given in sealing this type of installation. Consult the installation manual for details.

Heat Outlets - This furnace can be bottom discharged to a hard duct system, soft ducted out the back to a discharge plate into a hard duct system or completely soft ducted from a combination of the seven outlets located on both sides and back of the furnace. Refer to the installation manual for the ducting requirements of the specific model of furnace.

Serviceability - This entire furnace is serviceable without removing it from the RV. Therefore, there is no need to bench test it. All components are accessible by merely opening the access door. We strongly recommend trouble-shooting the furnace while it is installed in the RV.

Power Consumption - This furnace is designed to draw between 4.6 and 9.8 amps depending on the model of the furnace. Refer to the furnace specification decal when trouble-shooting its electrical system.

89 Series Model Identification

89 35 DC LP 6

MODEL DESCRIPTION

- Model
- BTU/Hr Rate (Input)
  - 35 = 35,000
  - 40 - 40,000
- Voltage
  - DC = direct current 12 Volts
  - AC = 120 Volts(120 VAC)
- Type Gas
  - LP = Propane
  - LC = set at factory for propane but field changeable to natural
  - NC = set at factory for natural but field changeable to propane
- Gas connection size
  - 6 = 3/8” Flare

Applications - This unit is typically installed in large travel trailers, 5th wheels, motor homes and park model trailers.

Installation - The 89 series furnace must only be installed horizontally.

Options - As the chart above indicates, this furnace can be purchased to operate on 12VDC or 120VAC with LP gas or Natural gas. Natural gas option is only available on AC models.

Heat Outlets - This furnace can be bottom discharged to a hard duct system, soft ducted into a hard duct system or completely soft ducted from a combination of the six outlets located on both sides and back of the furnace. Refer to the installation manual for the ducting requirements of the specific model of furnace.

Serviceability - This entire furnace is serviceable without removing it from the RV. All components are accessible by merely opening the access door. We strongly recommend trouble-shooting the furnace while it is installed in the RV.

Power Consumption - The DC version of this furnace is designed to draw approximately 12.5 amps. This is important when trouble-shooting the motor of this furnace.

2-stage Model Identification

23 34 DC LP 6 BP

MODEL DESCRIPTION

- Model
- BTU/Hr Rate (Input)
  - Low 23 = 23,000
  - High 34 = 34,000
- Voltage
  - DC = direct current 12 Volts
- Type Gas
  - LP = Propane
- Gas connection size
  - 6 = 3/8” Flare
  - 8 = 1/2” Flare
- Packing
  - SP = Single Pack
  - BP = Bulk Pack (layers of 4)

Wiring Diagram for 7900-II / 8000-II

IMPORTANT
If any original wire has to be replaced, it must be replaced with type 105° C or its equivalent.

With Blower Control Ignition Board

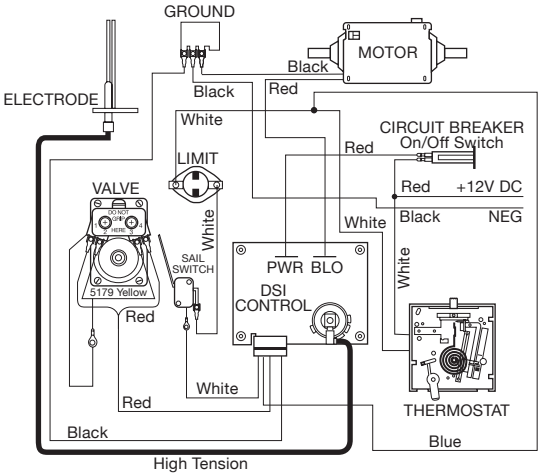

NOTE: The ON/OFF switch, located in line with the gas valve, is not used when a combination circuit breaker and ON/OFF switch is used.

REMOTE Sense Wiring

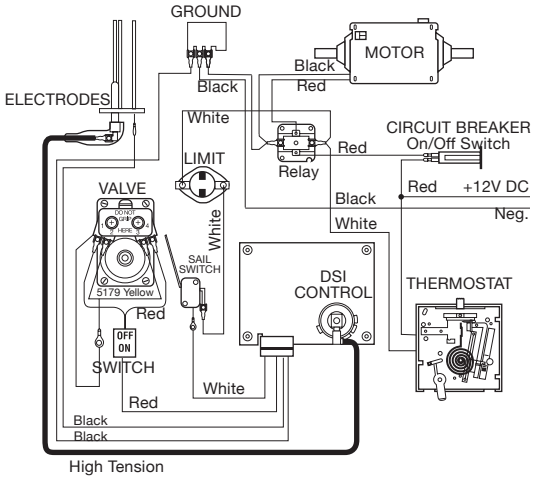

LOCAL Sense Wiring

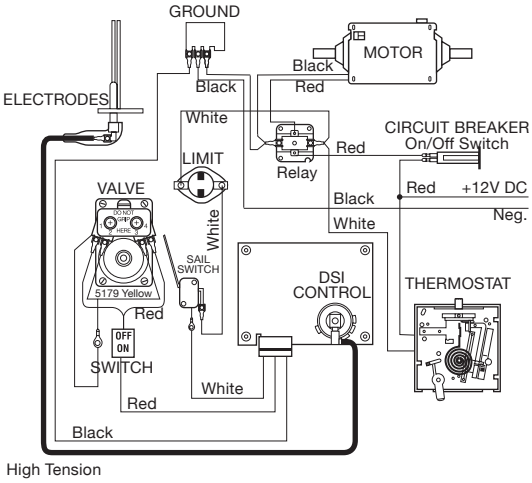

NOTE: The ON/OFF switch, located in line with the gas valve, is not used when a combination circuit breaker and ON/OFF switch is used.

Wiring Diagram
ACCS
Atwood Comfort Control System

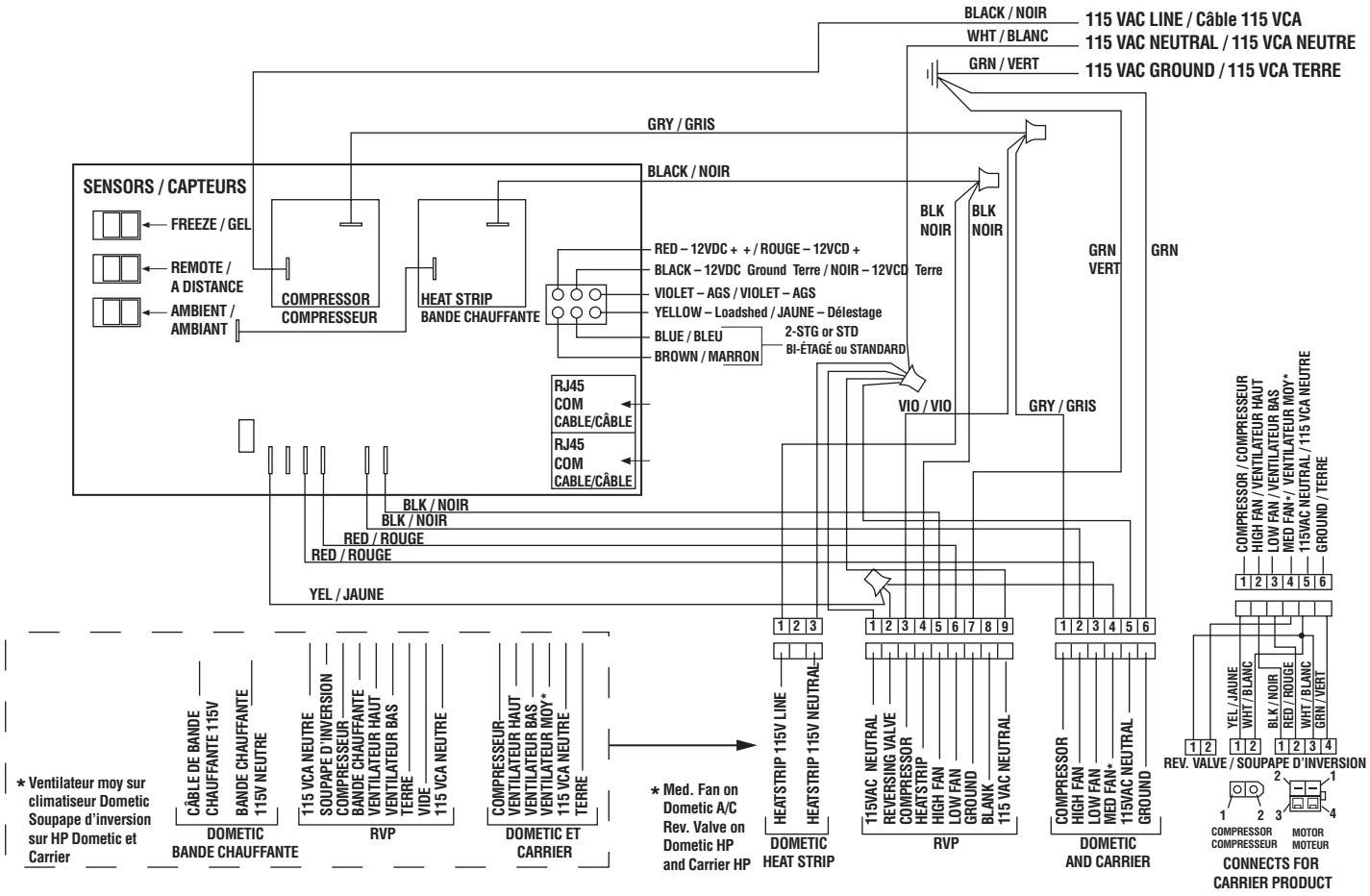

TOC

85 Series Wiring Diagrams

IMPORTANT: If any original wire has to be replaced, it must be replaced with type 105° C or its equivalent. Terminal Block on 85 Models only.

WITH DOOR and Blower Control Ignition Board

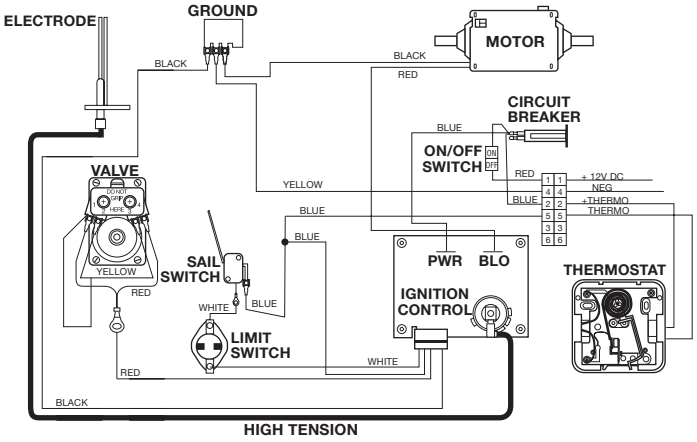

LADDER DIAGRAM

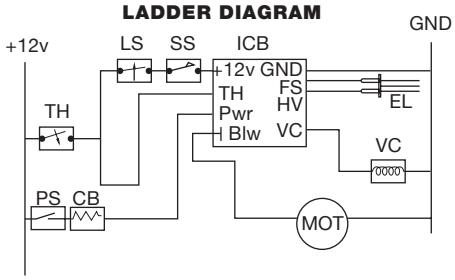

CB = Circuit Breaker
GND = Ground
GV = Gas Valve
HV = High Voltage
EL = Electrode
MOT = Blower Motor

SS = Sail Switch
TH = Thermostat
LS = Limit Switch
TR = Thermo Relay
VC = Valve Control
PS = Power Switch

NOTE: In some installations, the Power Switch (PS) may control the air conditioning system thermostat function.

WITHOUT DOOR, but with Blower Control Ignition Board

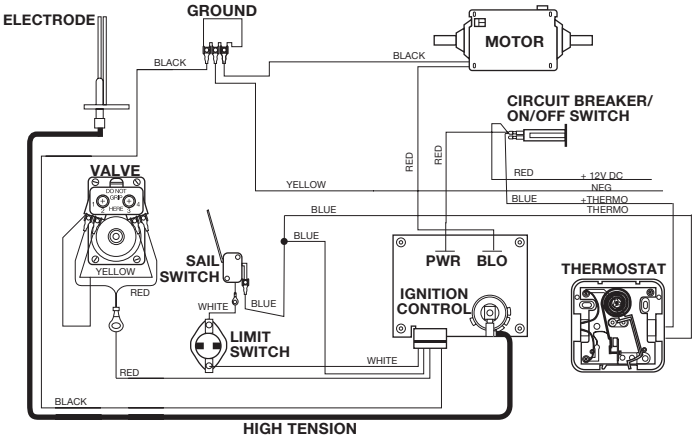

LADDER DIAGRAM

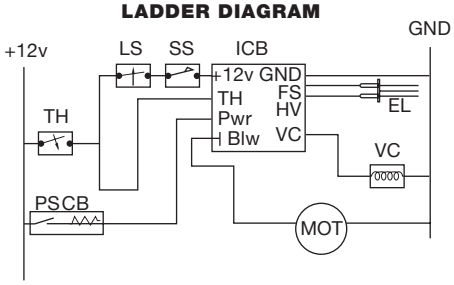

GND = Ground
GV = Gas Valve
HV = High Voltage
EL = Electrode
MOT = Blower Motor
SS = Sail Switch

TH = Thermostat
LS = Limit Switch
TR = Thermo Relay
VC = Valve Control
PSCB = Power Switch/ Circuit Breaker

NOTE: In some installations, the Power Switch (PS) may control the air conditioning system thermostat function.

85-IV Local Sense

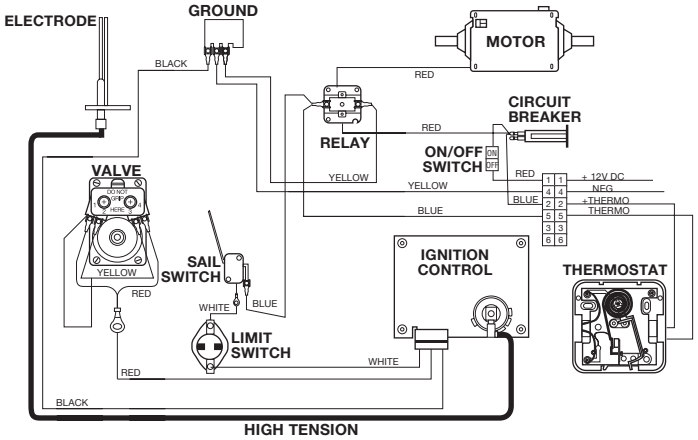

85-III Local Sense

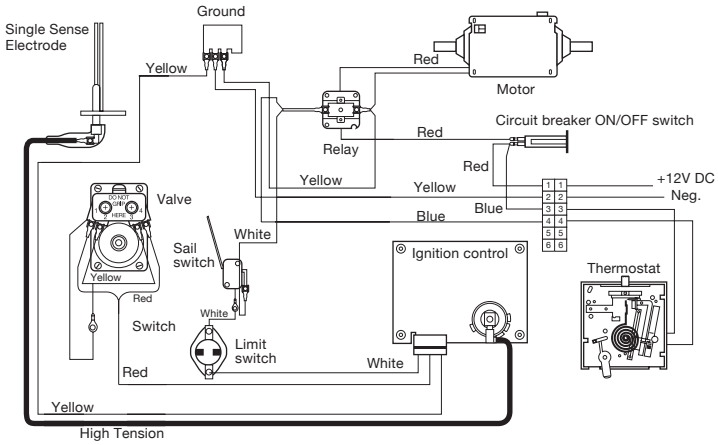

85 Series Wiring Diagrams

IMPORTANT
If any original wire has to be replaced, it must be replaced with type 105° C or its equivalent.

85-III Remote Sense

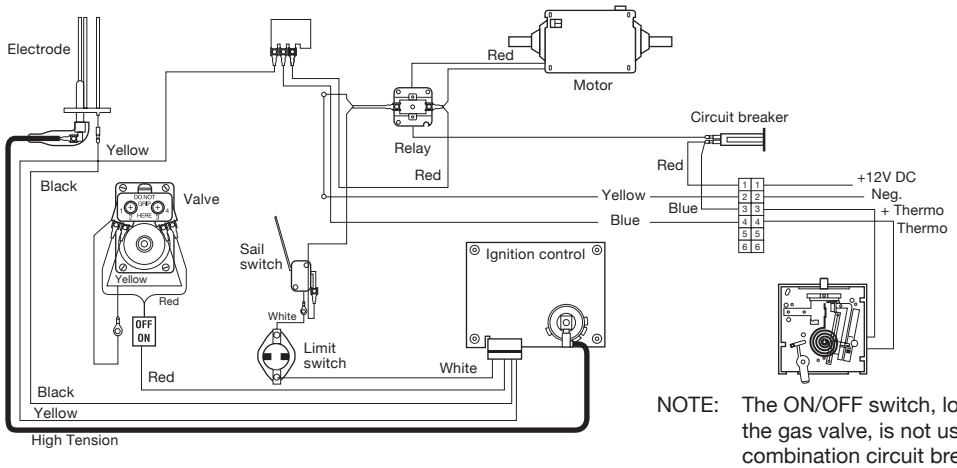

NOTE: The ON/OFF switch, located in line with the gas valve, is not used when a combination circuit breaker and ON/OFF switch is used.

85-I

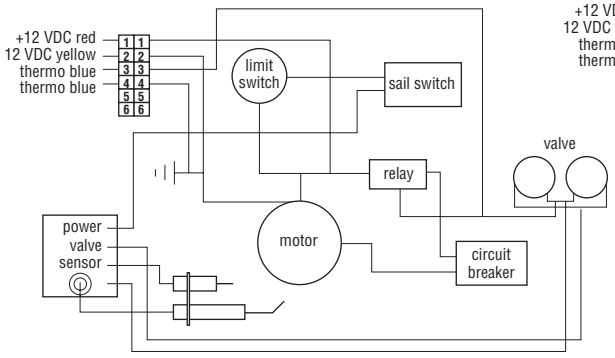

85-II

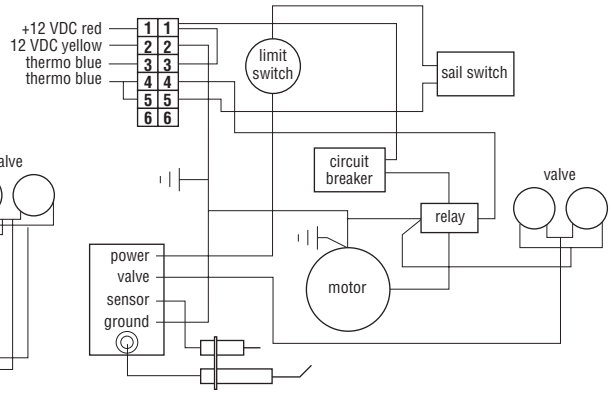

Wiring Diagram for 8900-III

DIAGNOSTIC CHART	
FAULT	**LED INDICATION**
Internal Circuit Board Failure	Steady on, no flashing
Limit switch/Airflow problems	1 flash with 3-second pause
Flame Sense Fault	2 flashes with 3-second pause
Ignition Lockout Fault	3 flashes with 3-second pause

IMPORTANT:
If any original wire has to be replaced, it must be replaced with type 105 C or its equivalent.

DC Wiring Diagram
WITHOUT DOOR

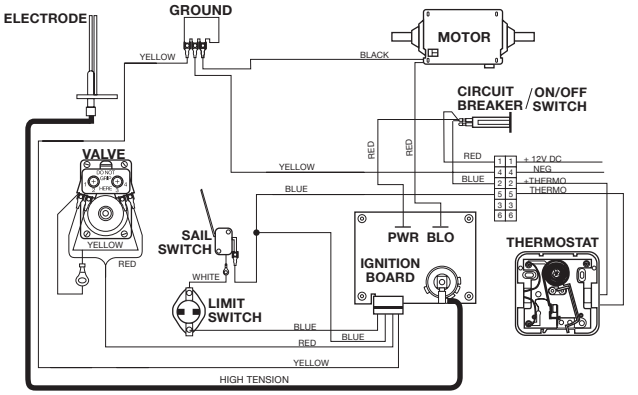

DC Wiring Diagram

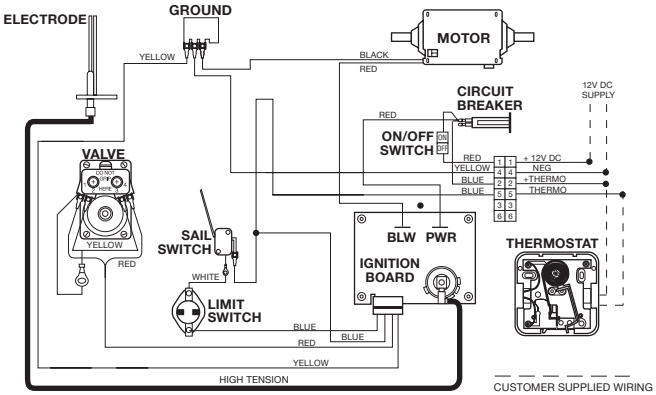

IMPORTANT: If any original wire has to be replaced, it must be replaced with type 105 C or its equivalent. Terminal Block on 85 Models only.

DC Wiring Diagram
WITH DOOR

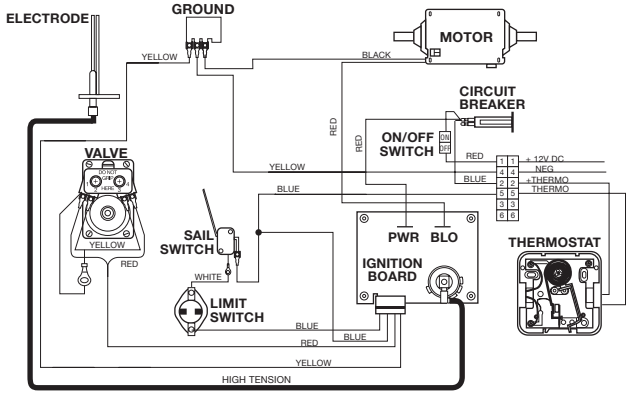

AC Wiring Diagram
WITH DOOR

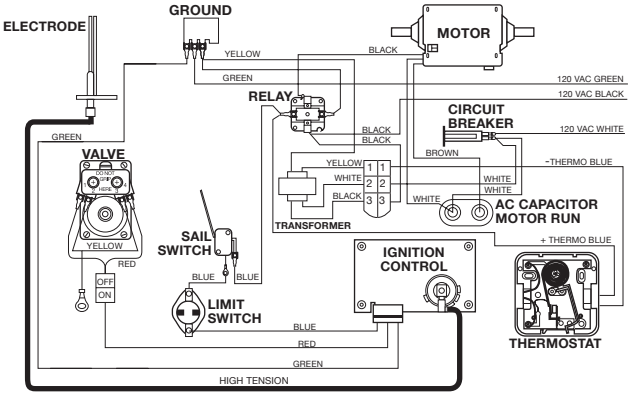

DC Wiring Diagram

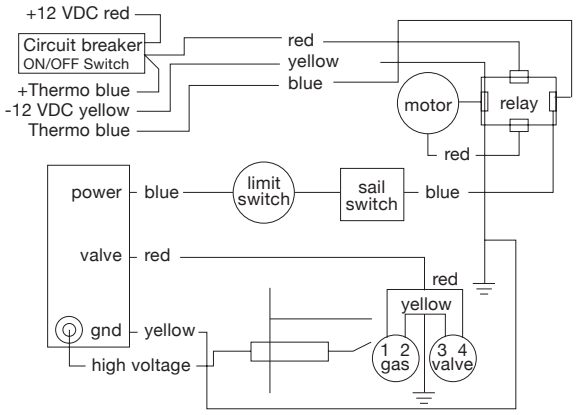

Supply Leads		Furnace Wiring
(+) 12 volt DC	to	(+) 12 volt DC (red wire)
(-) 12 volt D	to	(-) 12 volt DC (yellow wire)
thermostat	to	thermostat (blue wires)

AC Wiring Diagram
PICTORIAL DIAGRAM

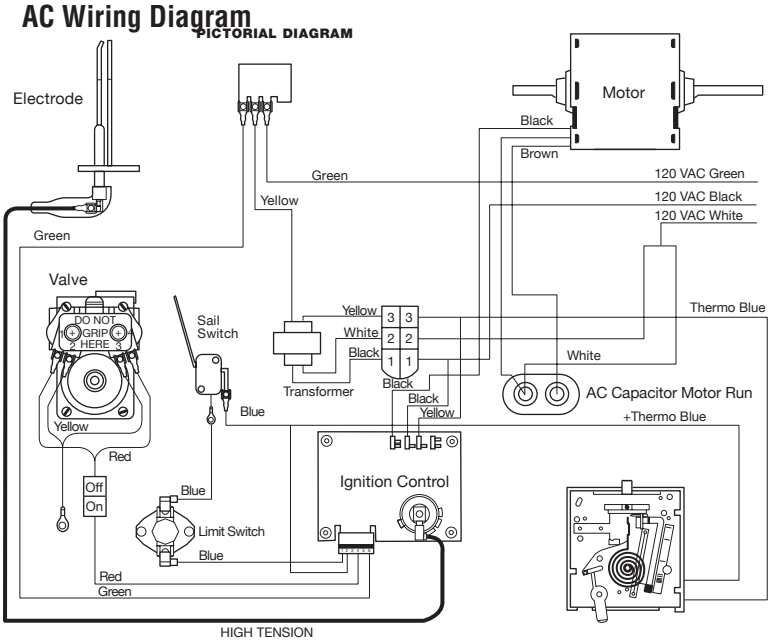

TOC

Wiring Diagram for 2-Stage Furnace

DIAGNOSTIC CHART

A diagnostic LED is located inside the exterior access cover on the outside edge of the horizontal (2) stage control board. The following graph defines the codes.

An Excalibur 2-Stage furnace must use an Atwood Digital Thermostat.

2-Stage Furnace Diagnostics

NUMBER OF LED FLASHES	DIAGNOSTIC INFORMATION	LOCKOUT
1	Low Input voltage	SOFT
2	Ignition Failure	SOFT
3	Open High Limit	SOFT
4	Stuck Sail Switch	HARD
5	Module Fault	HARD

NOTE: A SOFT lockout is a condition that is timed and will make additional attempts to correct the problem. A HARD lockout requires reset of the thermostat or turning the power switch off then back on.

Two Stage Furnace Models 1522 & 2334

WITH DOOR AND WITHOUT DOOR

CB = Circuit Breaker
GND = Ground
GV = Gas Valve
HV = High Voltage
EL = Electrode
MOT = Blower Motor
SS = Sail Switch
LS = Limit Switch
PS = Power Switch

NOTE: The Power Switch (PS) does not control the air conditioning system thermostat function.

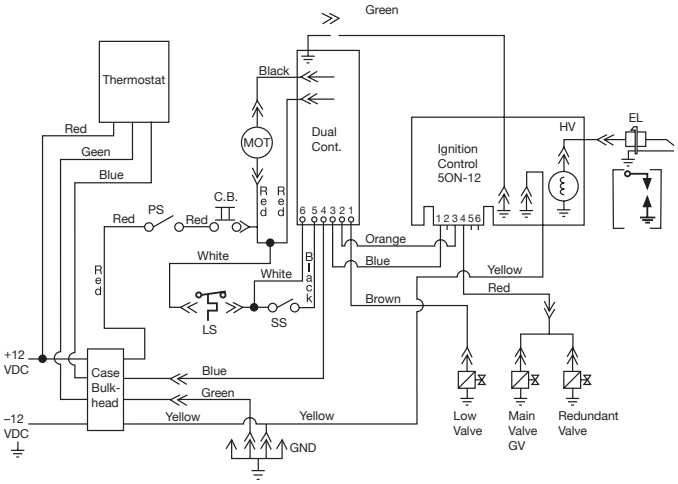

GND = Ground
GV = Gas Valve
HV = High Voltage
EL = Electrode
MOT = Blower Motor
SS = Sail Switch
LS = Limit Switch
PS/CB = Power Switch/ Circuit Breaker

NOTE: The Power Switch (PS) does not control the air conditioning system thermostat function.

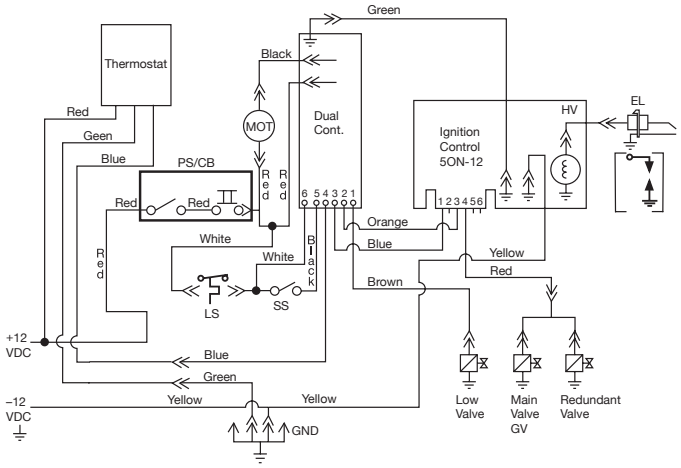

Two Stage Furnace Model 2540

WITH DOOR AND WITHOUT DOOR

CB = Circuit Breaker
GND = Ground
GV = Gas Valve
HV = High Voltage
EL = Electrode
MOT = Blower Motor
SS = Sail Switch
LS = Limit Switch
PS = Power Switch

NOTE: The Power Switch (PS) does not control the air conditioning system thermostat function.

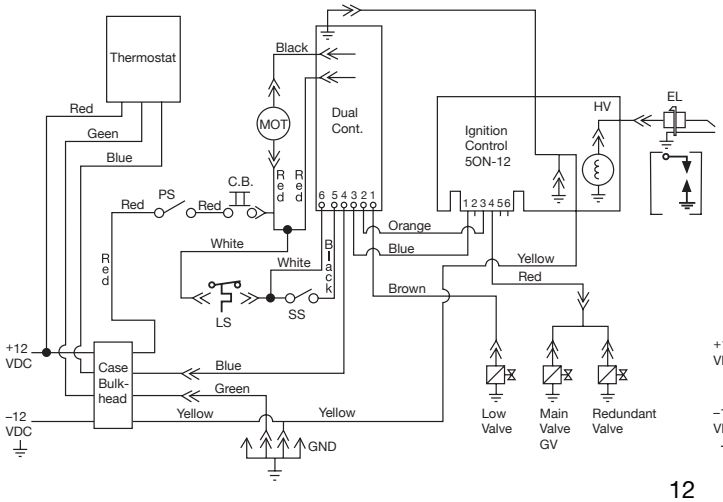

GND = Ground
GV = Gas Valve
HV = High Voltage
EL = Electrode
MOT = Blower Motor
SS = Sail Switch
LS = Limit Switch
PS/CB = Power Switch/Circuit Breaker

NOTE: The Power Switch (PS) does not control the air conditioning system thermostat function.

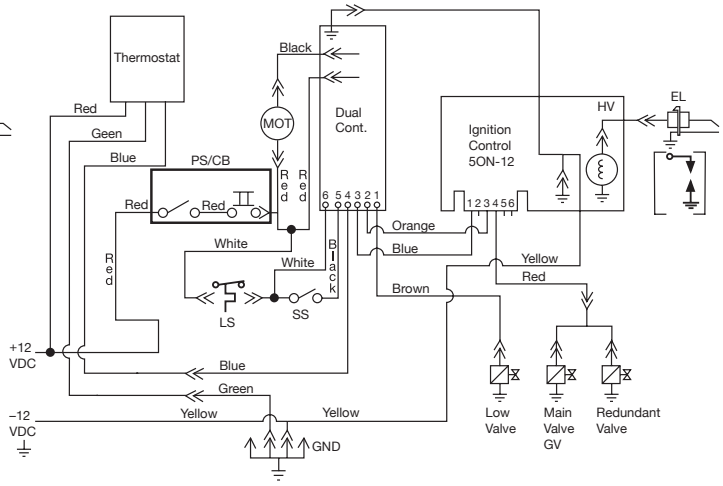

Sequence of Operation - DC Models

The ON/OFF switch allows power to pass to the circuit breaker and the thermostat.

↓

The thermostat controls the operating circuit to the furnace by reacting to room temperature. When room temperature is below the thermostat set point, the contact closes to allow current to flow to the circuit board.

↓

The circuit breaker limits amperage draw of motor.

↓

The relay on the circuit board allows current to pass to the motor by closing a switch within the relay. The 12v+ signal from the thermostat actuates the relay circuit. The motor will start the blower running immediately.

↓

Current flows to the motor to operate the blower. One end of the motor shaft is for the circulating air wheel and the other side is for the combustion air wheel.

↓

Circulating air blows against the sail switch and closes the contacts, completing the circuit. The sail switch is a safety device that insures air flow before ignition.

↓

The limit switch is a safety device that protects the furnace from over heating. The contacts in the limit switch open at a given temperature setting, shutting off power to the electronic ignition system that controls the gas valve.

↓

As power is applied to the circuit board, the system does the following:

1. A timing circuit allows the blower to purge the chamber (15-17 seconds)
2. The board supplies current to the gas valve and causes it to open. A manual electrical switch is provided and must be in the "ON" position for current to reach the valve.
3. As the valve opens, the board sends a high voltage spark to the electrode at the burner. The board detects the presence of a flame. If the flame is not sensed after approximately six seconds, the board will lock out (three try for ignition, one hour lockout and then three retry), shutting off power to the valve.
4. If the system does not ignite and the thermostat remains closed after three tries the blower will shut off.

↓

When the thermostat senses the desired room air temperature, the contacts open, removing power from the ignition system and shutting off the gas valve. The blower runs until the heater in the relay cools and opens the circuit, shutting off current to the motor.

⚠ WARNING
FURNACE PRODUCES HIGH TEMPERATURE

- Locate furnace out of traffic and away from furniture and draperies.
- Do not touch or put combustibles near appliance. Hot surface temperature may occur.
- Supervise young children in the same room as the furnace.
- Do not place clothing or flammable materials on or near the furnace.

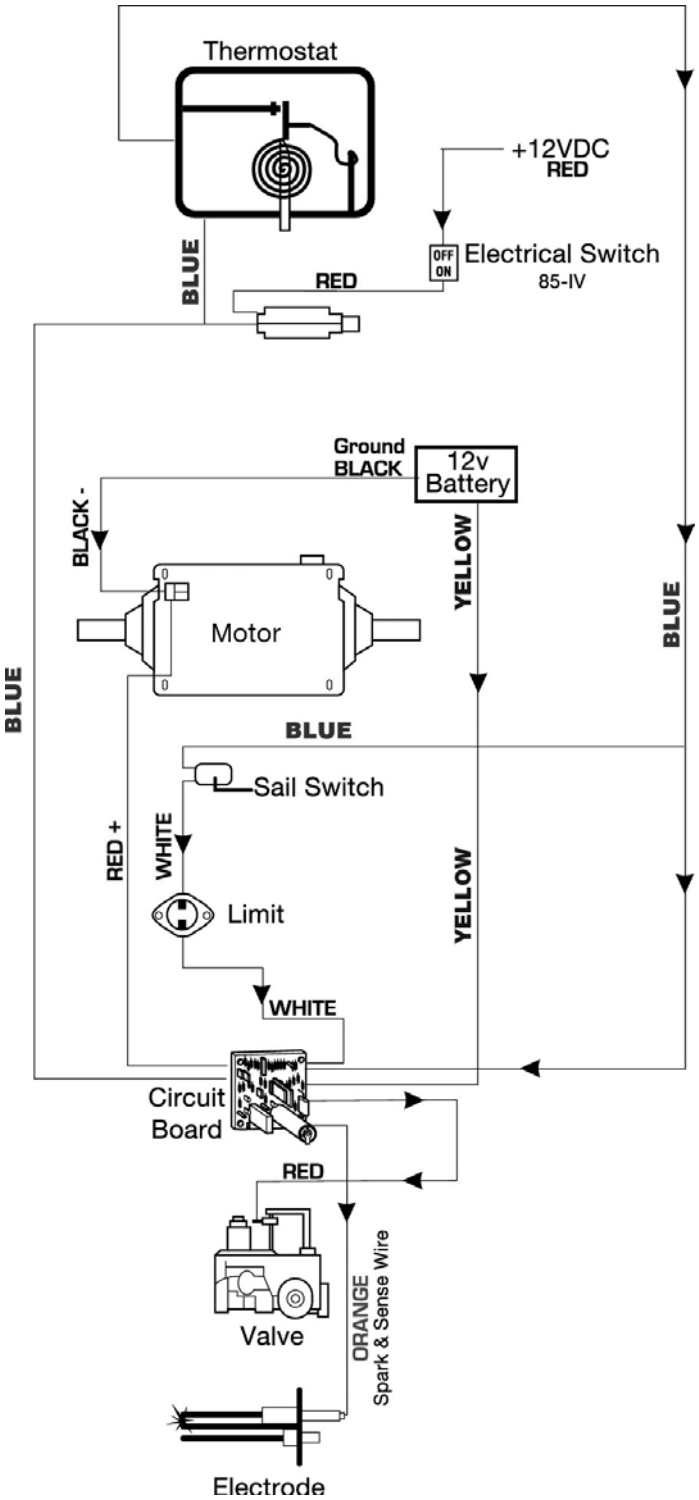

Sequence of Operation - DC Models (Standard One-Stage)

The ON/OFF switch allows power to pass to the circuit breaker and the thermostat.

↓

The thermostat controls the operating circuit to the furnace by reacting to room temperature. When room temperature is below the thermostat set point, the contact closes to allow current to flow to the relay.

↓

The circuit breaker limits amperage draw of motor.

↓

The relay allows current to pass to the motor by closing a switch within the relay. Voltage from the thermostat activates the relay to turn the fan on. This takes 1-25 seconds. The Relay is now part of the Ignition Board on all DC products.

↓

Current flows to the motor to operate the blower. One end of the motor shaft is for the circulating air wheel and the other side is for the combustion air wheel.

↓

Circulating air blows against the sail switch and closes the contacts, completing the circuit. The sail switch is a safety device that insures air flow before ignition.

↓

The limit switch is a safety device that protects the furnace from over heating. The contacts in the limit switch open at a given temperature setting, shutting off power to the electronic ignition system that controls the gas valve.

↓

As power is applied to the circuit board, the system does the following:

1. A timing circuit allows the blower to purge the chamber (15-17 seconds)
2. The board supplies current to the gas valve and causes it to open.
3. As the valve opens, the board sends a high voltage spark to the electrode at the burner. The board detects the presence of a flame. If the flame is not sensed after approximately six seconds, the board will lock out (three try for ignition, one hour lockout and then three retry), shutting off power to the valve.
4. If the system does not ignite and the thermostat remains closed, the blower will remain on until the thermostat is reset manually.

↓

When the thermostat senses the desired room air temperature, the contacts open, removing power from the ignition system and shutting off the gas valve. The blower runs until the relay opens the circuit, shutting off current to the motor.

⚠ WARNING
FURNACE PRODUCES HIGH TEMPERATURE

- Locate furnace out of traffic and away from furniture and draperies.
- Do not touch or put combustibles near appliance. Hot surface temperature may occur.
- Supervise young children in the same room as the furnace.
- Do not place clothing or flammable materials on or near the furnace.

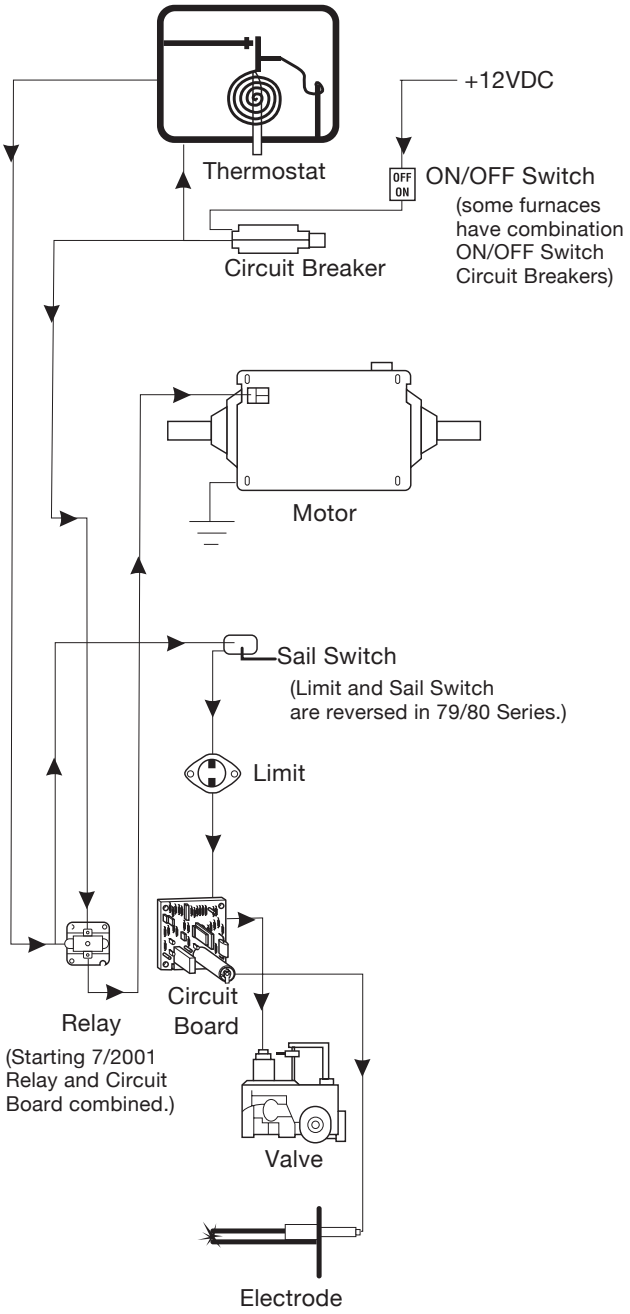

Sequence of Operation Pilot Models

The thermostat controls the operating circuit to the furnace by reacting to room temperature to open and close a set of contact points which allows current to flow to the relay.

↓

The relay receives the current and allows current to pass through to the circuit breaker by closing a switch within the relay. This is done by a heater coil within the relay which actuates a bi-metal disc closing the relay circuit.

↓

The circuit breaker is placed in line to monitor the Amp draw of the motor. It is an overload and safety protector for the motor.

↓

The current then flows to the motor and allows the blower to operate. One end of the motor shaft drives the circulating air wheel and the other end of the motor shaft drives the combustion air wheel that delivers the required air to the burner for combustion.

↓

As the circulating air wheel comes up to speed, it blows against the sail switch completing the circuit. The sail switch is placed into the system as a safety to prove there is adequate air for combustion.

↓

The limit switch is an in line safety device which protects the furnace from any over heating conditions. The contacts in the limit switch open at a given temperature setting, shutting off power to the valve.

↓

The next section of operation is controlled by the valve and pilot. Once the power is applied to the valve, the following steps are:

1. Set gas valve knob to the pilot setting to light the pilot.
    a. light pilot.
2. Set gas valve knob to the ON position for burner operation.
3. While ON stand by, if the pilot goes out and the thermostat closes, the blower will come on, but the valve will remain closed. At this time, the pilot must be relit for burner operation.

Note: The blower will remain running until the thermostat contact opens.

↓

As the thermostat senses the room air temperature, the contacts will open removing power from the valve which will shut off the gas. The blower will remain on until the heater coil within the relay cools and the relay opens and stops the current flow to the motor.

A - Thermostat
B - Relay
C - Breaker
D - Motor
E - Sail Switch
F - Limit
G - Gas Valve
H - Pilot Assembly

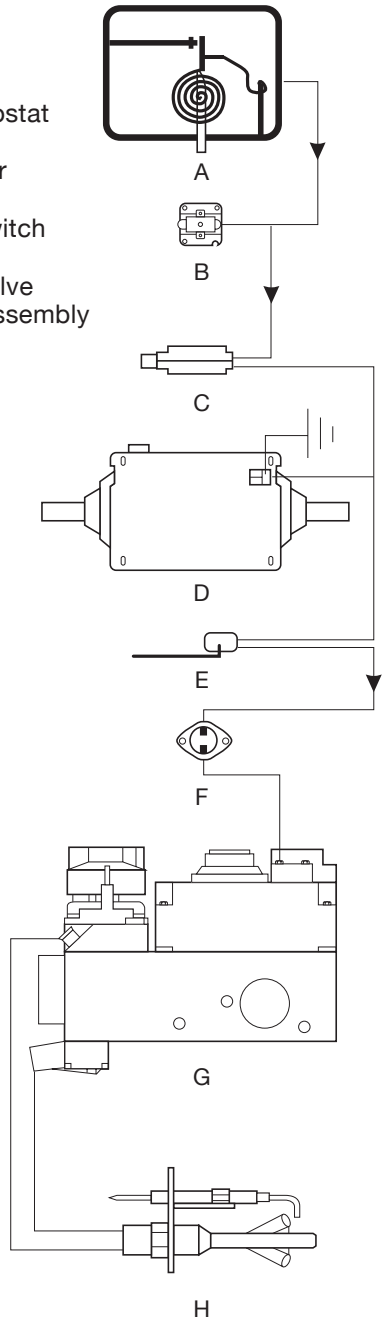

Sequence of Operation - AC Models

Operating Circuitry 24 VAC

The transformer receives 120 VAC which it converts to 24 VAC for the operating circuitry.

↓

The thermostat controls the operating circuit to the furnace by reacting to room temperature. When room temperature is below the thermostat set point, the contacts close to allow current to flow to the relay. The relay receives 24 VAC and energizes a heater coil within the relay. This activates a bimetal disc which closes the relay circuit. This takes 17-20 seconds.

↓

Once the relay circuit is closed, 120 VAC flows to the motor and allows the blower to run. One end of the motor is for the circulating air wheel and the other end is for the combustion air wheel.

↓

Circulating air blows against the sail switch and closes the contacts, completing the circuit. The sail switch is a safety device that insures air flow before ignition.

↓

The limit switch is a safety device that protects the furnace from overheating. The contacts in the limit switch open at a given temperature setting, shutting off power to the electronic ignition system that controls the gas valve.

↓

As power is applied to the electronic ignition circuit board, the system does the following:

1. A timing circuit allows the blower to purge the chamber (15-17 seconds.
2. The board supplies current to the gas valve and causes it to open. There is an electrical switch in line to the valve to allow power to be manually shut off to the valve. This switch must be on for the furnace to operate. (Switch may be separate or combined with circuit breaker).
3. As the valve opens, the board sends a high voltage spark to the electrode at the burner. The board detects the presence of a flame, if the flame is not sensed after seven seconds, the board will lock out, shutting off power to the valve.
4. If the system does not ignite and the thermostat remains closed, the blower will remain on until the thermostat is reset manually.

↓

When the thermostat senses the desired room air temperature, the contacts open removing power from the ignition system and shutting off the gas valve. The blower runs until the heater in the relay cools and opens the circuit, shutting off current to the motor.

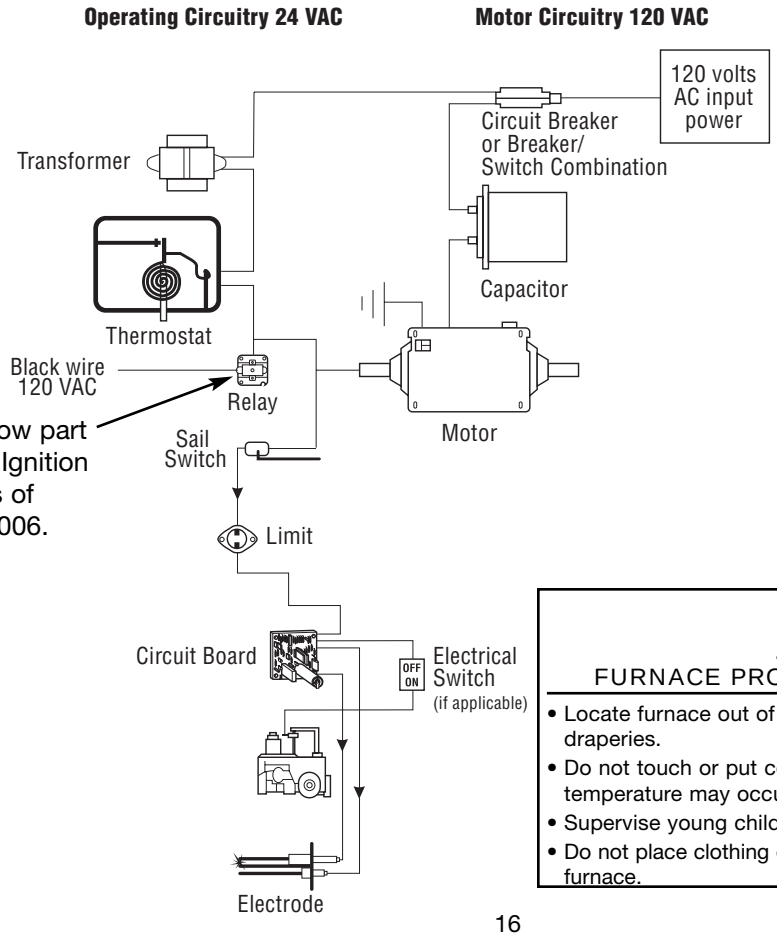

Relay is now part of the AC Ignition Control as of January 2006.

⚠ WARNING
FURNACE PRODUCES HIGH TEMPERATURE

- Locate furnace out of traffic and away from furniture and draperies.
- Do not touch or put combustibles near appliance. Hot surface temperature may occur.
- Supervise young children in the same room as the furnace.
- Do not place clothing or flammable materials on or near the furnace.

Sequence of Operation - DC Models
2-Stage Excalibur™ Furnace ONLY

The digital thermostat controls the operating circuit to the furnace by reacting to room temperature. When the room temperature is below the thermostat set point by 2°F a heat demand signal will be sent to the controller module (see MPD 38463).

↓

The ON/OFF switch is an agency safety power shut off to the furnace ignition and gas valve systems.

↓

The circuit breaker limits amperage draw of the motor.

↓

Current flows to the controller module and during the first seconds the micro-processor confirms inputs and verifies correct operation of safety redundancies. This module will perform the following diagnostic checks of the system.

a. Sail Switch is open
b. Internal Microprocessor faults
c. Voltage inputs
d. Ignition
e. Open Limit Switch

In the event of a failure an LED on the controller module will flash a code. See chart.

↓

The motor receives current from the controller module and will run at high speed or low speed depending on the demand signal the digital thermostat sends to the controller module. One end of the motor shaft is for the circulating air wheel and the other end is for the combustion air wheel.

↓

Circulating air blows against the sail switch and closes the contacts, completing the circuit. The sail switch is a safety device that insures air flow before ignition.

↓

The limit switch is a safety device that protects the furnace from over heating. the contacts in the limit switch open at a given temperature setting, shutting off power. This activates the open limit switch diagnostics and makes the LED on the controller module to flash and shuts down the gas valve. See chart.

↓

As power is applied to the circuit board, the system does the following:

a. timing circuits allows the blower to purge the heat chamber for 15 seconds.
b. current is supplied to the gas valve and causes it to open to high burn. (The controller module activates the low burn operation on the valve.)
c. as the valve opens, the ignition module sends a high voltage spark to the electrode at the burner. The ignition module detects the presence of a flame. If the flame is not sensed after 7 seconds of sparking a signal is sent to the controller module that there is no ignition and shuts off the valve. After another 25 second purge, it will try again. After a third try, the controller will go into “soft” lockout, timing for one hour and the diagnostic LED will flash a code, see chart. After the timed hour, the controller will initiate (3) more tries for ignition. If there is no ignition, the timing sequence begins again.
d. If the system does not ignite and the thermostat is still calling for a heat demand, the blower will run for 90 seconds as a post purge then shut off.

→

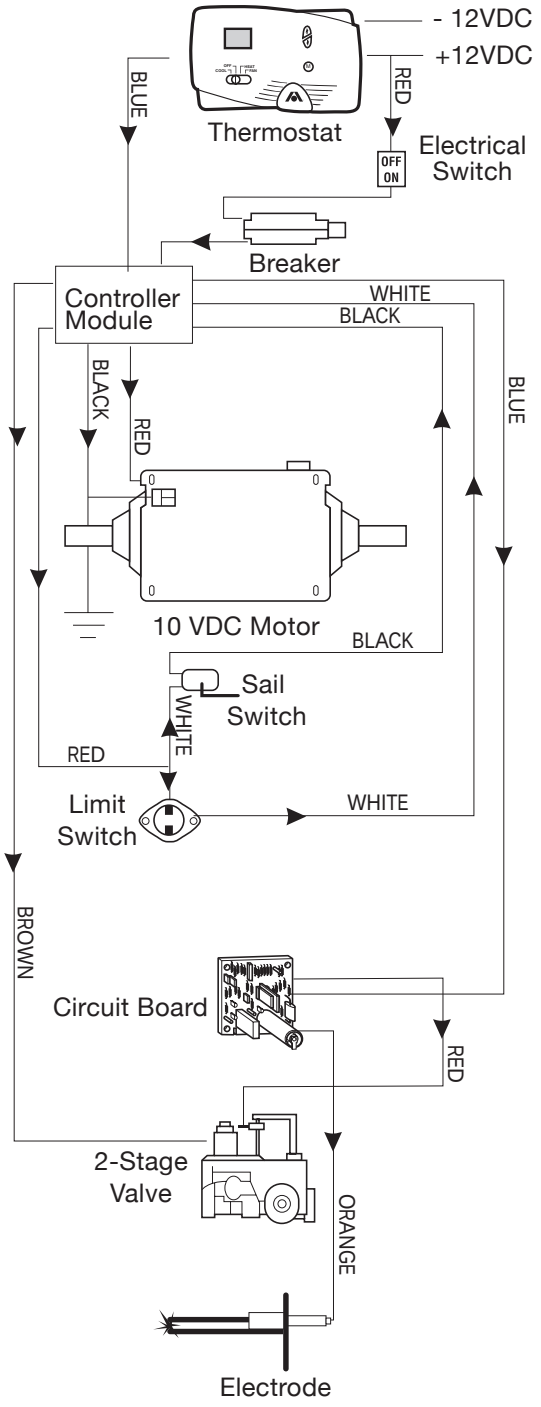

When the thermostat senses the desired room air temperature, a signal is sent to the controller module to shut down operation of the gas valve and run the blower for 90 seconds as a post purge of heat from the furnace heat chamber.

Annual Preventative Maintenance Inspection

The following preventive maintenance and safety checks should be performed by a qualified RV technician once a year, or more, depending on the use of the furnace. Failure to properly maintain the furnace may void the furnace warranty and can result in unsafe furnace operation. Preventive maintenance is not covered under warranty.

AIR WHEEL - The air wheel should be clean and clear of obstructions. Starting the furnace with something in the blower will damage the wheel, making replacement necessary.

BURNER - The Burner requires no adjustments, but should be inspected annually. Burners should be cleaned with a wire brush to remove debris and corrosion build up.

COMBUSTION CHAMBER - Check the air intake and flue areas of the furnace for internal obstructions, such as wasp or bird nests. The life of the combustion chamber is a function of the amount of time that the furnace has operated. Therefore, it is essential to inspect the chamber for cracks and holes. Have the chamber replaced if it has any cracks or holes - this condition is not field repairable. Chamber should be cleaned if obstructions are present, by removing the chamber and flushing the unit out with water.

CONTROL COMPARTMENT - Clean the control compartment to remove dirt and lint.

DUCTING - The heat ducts should be clean and clear of obstructions. Check for proper duct connection. Any ducts disconnected from the furnace or outlets must be reattached.

GAS PRESSURE - Using a U-tube water manometer, with the furnace and all of the gas appliances operating, the pressure should be 11˝ W.C. (27mbar). Improper gas pressure can cause the furnace to work inconsistently and create unbalanced combustion.

GAS SUPPLY SYSTEM - Perform a pressure-drop test according to current ANSI standards, to insure that there are no gas leaks.

GASKETS - Inspect all gaskets for tight seals. Do not reuse gaskets - always replace with new.

GENERAL - Check that the physical support of the furnace is sound and without sagging, cracks, gaps, etc.

MOTOR - The motor is lubricated and permanently sealed. It requires no oiling. Brushes and armatures are not replaceable.

RETURN AIR - The return air passage should be clean and clear of obstructions and meet the minimum square inches as specified in the installation instructions. Make sure combustibles are not stored in the furnace compartment. Filters are not recommended at these air passages.

VENTING - After checking and clearing, if necessary, the draft cap assembly must have the proper overlap between the exhaust tube and the furnace chamber tube. Any air leakage at these joints may cause improper combustion. Draft cap assembly must overlap no less than 1-1/4˝ (32mm), and be positioned against the door screen for proper function.

VOLTAGE - Voltage should be between 10.5 and 13.5 VDC at the furnace during operation. The power at the furnace needs to be checked with each of the following power sources when applicable: generator, battery, and converter. Low voltage can cause the furnace to overheat and cycle. High voltage can cause unbalanced combustion, and excessive motor wear. Note: To increase motor life the furnace should be wired directly to the battery.

WIRE CONNECTIONS - Check the furnace for loose or disconnected wires.

⚠ WARNING
CRITICAL INSTALLATION CRITERIA

- Do not install the furnace on material that restricts return air, such as carpet, or any soft material, such as vinyl.
- Do not install furnace where clearance to combustibles cannot be maintained.
- Do not modify the furnace in any way.
- Do not alter the furnace for a positive grounding system.
- Do not HI-POT this furnace unless the electronic ignition system (circuit board) has been disconnected.
- Do not use a battery charger to supply power to DC model furnace even when testing.
- Do not use 120 volt AC current with DC models.
- Do not use the furnace cabinet area as a storage compartment.
- Do not vent this furnace with a venting system serving any other appliance.
- Do not vent this furnace to an outside enclosed porch area.
- Do not use for temporary heating of buildings or structures under construction.
- Locate the furnace in an area that will not be blocked by snow.
- Protect building materials from degrading from flue gas exhaust.
- Protect furnace electrical components from water.
- Do not use closeable registers when minimum ducting cannot be maintained.
- Wire furnace direct to battery when possible.
- Use a minimum of 22 gauge wire for the thermostat.
- Use a minimum of 18 gauge wire to the furnace from power supply.
- Follow wiring color code exactly.
- Hold both fittings with a wrench when tightening gas connection.
- Always meet or exceed minimum duct requirements.
- Always meet minimum return air requirements.
- Isolate return air passage from range compartment.

⚠ WARNING

- Installation, repairs and preventative maintenance should be done by a qualified service person only.
- The furnace should be inspected before use and at least annually by a qualified service person.
- Frequent cleaning may be required due to excessive lint from carpeting, bedding material, pet hair, etc. It is imperative that control compartments, burners and circulating air passageways of the furnace be kept clean.
- Label all wires prior to disconnection when servicing. Wiring errors can cause improper and dangerous operation. Verify proper operation after servicing.

⚠ WARNING
CARBON MONOXIDE POISONING

- Furnace must be installed and vented to these instructions.
- Improper installation, adjustment, alteration, service or maintenance can cause injury or property damage.
- Improper installation location may cause furnace to produce negative pressure, affecting combustion air or venting of other appliances.

For assistance or additional information, consult a qualified installer, service agency or gas supplier.

Atwood®
Atwood Mobile Products LLC
1120 North Main Street • Elkhart, IN 46514
PHONE: 574•264•2131 **FAX**: 574•262•2550
INTERNET: http://www.atwoodmobile.com

LITERATURE NUMBER MPD 31492

hydro flame™

Model 1H2C Digital Thermostat

FOR STANDARD FURNACES & A/C SYSTEMS

ENGLISH, FRANCAIS (et Canada)

•Installation •Operation

Effective 9/21/04

THIS THERMOSTAT HAS BEEN DESIGNED TO OPERATE STANDARD AIR CONDITIONING UNITS IN CONJUNCTION WITH A RV FURNACE.

SPECIFICATIONS

Operating Voltage ..... 9VDC to 18VDC
Current Consumption at 12VDC 100mA
Operating Temp. ..... -40F to +185F
Room Temp. Range ..... +55F to +90F
Room Temp. Display Range ..... +35F to +99F
Thermostat Accuracy ..... +/- 1F
Switching Capability A/C .....up to 24 VAC (max. 2 AMPs)

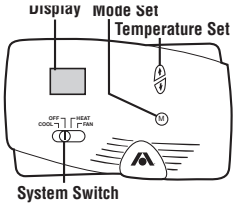

*Note: Move jumper to positions 3 and 4 for RVP Unit. Discard jumper for Dometic®.

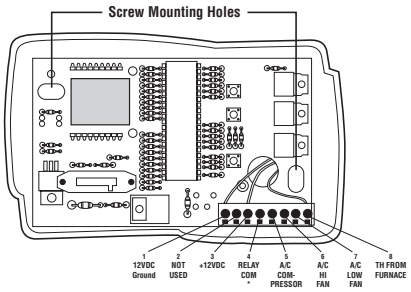

SLIDE SWITCH LEFT		RIGHT		SCROLL ORDER OF DISPLAYED MODES			OPERATION
COOL	OFF	HEAT	FAN				**Furnace Operation**
		●		HI			Furnace cycles to satisfy set point.
COOL	OFF	HEAT	FAN				**Air Conditioner Operation**
●				AU			Air conditioner automatically switches compressor and high and low speed fan when cycling to satisfy set point.
●					HI		Air conditioner compressor and high speed fan cycle to satisfy set point.
●						LO	Air conditioner compressor and low speed fan cycle to satisfy set point.
COOL	OFF	HEAT	FAN				**Fan Operation**
			●		HI		Air conditioner fan runs at high speed to circulate air.
			●			LO	Air conditioner fan runs at low speed to circulate air.
COOL	OFF	HEAT	FAN				**Off**
	●			OF			No operation occurs.

THERMOSTAT INSTALLATION

Thermostat is very sensitive. **HANDLE WITH CARE AT ALL TIMES.**

Locate thermostat 48˝ to 54˝ above floor on an INTERIOR wall. Pick a dry area where air circulation is good. EXTERIOR wall location must have a 3/4˝ spacer between thermostat and exterior wall.

1. Be sure all electrical power has been disconnected from the air conditioner, furnace and the power supply.
2. Do not install the thermostat where there are unusual heating conditions: such as direct sunlight, heat producing appliances (television, radio, wall lamp, etc.) or a furnace or air conditioner supply register.
3. **ATTACHING THE WALL THERMOSTAT.** Separate the thermostat body from the sub-base by gently squeezing the top and bottom, connecting wiring per requirements. Attach thermostat sub-base to the wall at desired mounting location.

WIRING REQUIREMENTS FOR ATWOOD THERMOSTAT

12 VDC ANALOG A/C SYSTEMS (RVP®)

THERMOSTAT TERMINAL # (L-R)	WIRE FROM FURNACE FUNCTION	WIRE FROM A/C FUNCTION
1	-12vdc ground	
2	not used	not used
3 & 4	+12vdc	
5		Compressor
6		High Fan
7		Low Fan
8	Furnace Control	

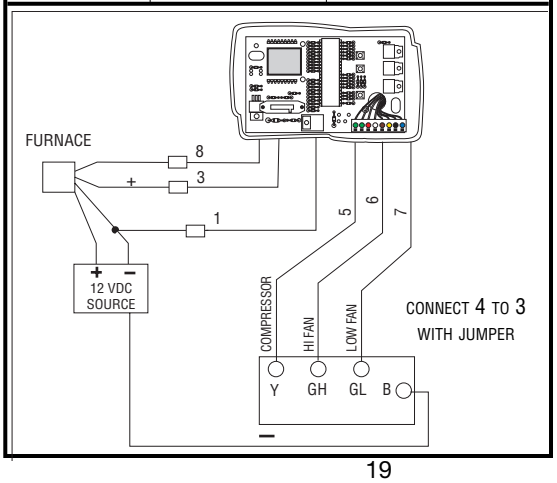

7.5 VDC ANALOG A/C SYSTEMS (DOMETIC®)

THERMOSTAT TERMINAL # (L-R)	WIRE FROM FURNACE FUNCTION	WIRE FROM A/C FUNCTION
1	-12vdc ground	
4		7.5 vdc
3	+12vdc	
5		Compressor
6		High Fan
7		Low Fan
8	Furnace Control	

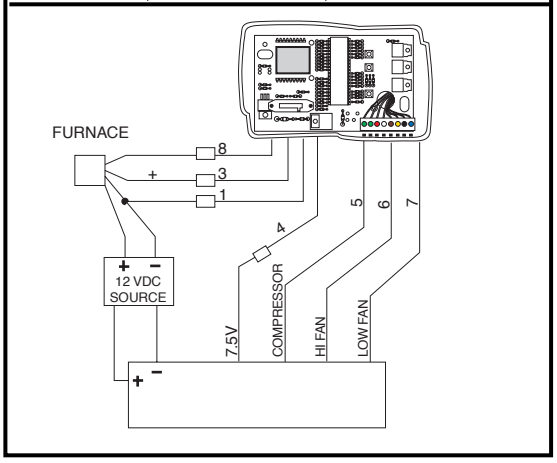

Atwood®
Atwood Mobile Products LLC
1120 North Main Street • Elkhart, IN 46514
PHONE: 574•264•2131 **FAX**: 574•262•2550
INTERNET: http://www.atwoodmobile.com

LITERATURE NUMBER MPD 31493

hydro flame™

Model 2H2C Two Stage Furnace Digital Thermostat

FOR TWO STAGE FURNACE

ENGLISH, FRANCAIS (et Canada)

•Installation •Operation

Effective 9/21/04

THIS THERMOSTAT HAS BEEN DESIGNED TO OPERATE STANDARD AIR CONDITIONING UNITS IN CONJUNCTION WITH AN EXCALIBUR 2-STAGE FURNACE.

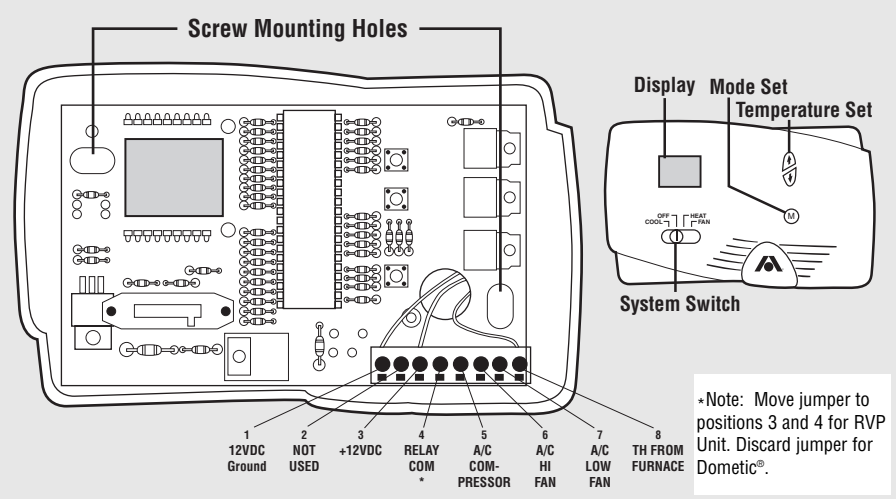

THERMOSTAT INSTALLATION

Thermostat is very sensitive. **HANDLE WITH CARE AT ALL TIMES.**

Locate thermostat 48˝ to 54˝ above floor on an INTERIOR wall. Pick a dry area where air circulation is good. EXTERIOR wall location must have a 3/4˝ spacer between thermostat and exterior wall.

1. Be sure all electrical power has been disconnected from the air conditioner, furnace and the power supply.
2. Do not install the thermostat where there are unusual heating conditions: such as direct sunlight, heat producing appliances (television, radio, wall lamp, etc.) or a furnace or air conditioner supply register.
3. **ATTACHING THE WALL THERMOSTAT.** Separate the thermostat body from the sub-base by gently squeezing the top and bottom. Pull wires through access hole in base plate. Attach thermostat sub-base to the wall at the desired mounting location. Mount the sub-base to the wall before connecting the wires.

System Slide Switch LEFT		RIGHT		SCROLL ORDER OF DISPLAYED MODES					OPERATION
COOL	OFF	**HEAT**	FAN	Scroll Order of Displayed Modes					**Furnace Operation**
		•		AU					Furnace automatically switches between high and low BTU valve and high and low speed fan when cycling to satisfy set point.
		•			HI				Furnace high BTU valve and high speed furnace fan cycle to satisfy set point.
		•				LO			Furnace low BTU valve and low speed furnace fan cycle to satisfy set point.
		•					HF		Furnace fan runs at high speed to circulate air. Air conditioner fan does not run.
		•						LF	Furnace fan runs at low speed to circulate air. Air conditioner fan does not run.
COOL	OFF	HEAT	FAN	Scroll Order of Displayed Modes					**Air Conditioner Operation**
•				AU					Air conditioner automatically switches compressor and high and low speed fan when cycling to satisfy set point.
•					HI				Air conditioner compressor and high speed fan operate to satisfy set point.
•						LO			Air conditioner compressor and low speed fan operate to satisfy set point.
•							HF		Air conditioner fan runs at high speed to circulate air. Furnace fan does not run.
•								LF	Air conditioner fan runs at low speed to circulate air. Furnace fan does not run.
COOL	OFF	HEAT	**FAN**	Scroll Order of Displayed Modes					**Fan Operation**
			•		HI				Air conditioner fan and furnace fan run at high speed to circulate air.
			•			LO			Air conditioner fan and furnace fan run at low speed to circulate air.
COOL	**OFF**	HEAT	FAN	Scroll Order of Displayed Modes					**Off**
	•			OF					No operation occurs.

Specifications

Operating Voltage ..... 9VDC to 18VDC
Power Consumption 100mA
Operating Temperature ..... -40F to +185F
Room Temperature Range ..... +55F to +90F
Room Temperature Display Range .. +35F to +99F
Thermostat Accuracy ..... +/- 1F

Mechanical Thermostat - HEAT ONLY

WHAT IS A THERMOSTAT?

- It is an ON/OFF switch controlled by a bi-metal coil which opens and closes an electrical contact by sensing changes in the ambient temperature.
- With its contacts close, it supplies power to the time delay relay which in turn closes a contact that sends power to the blower motor.
- Normally, the thermostat contacts are closed if the blower is running.

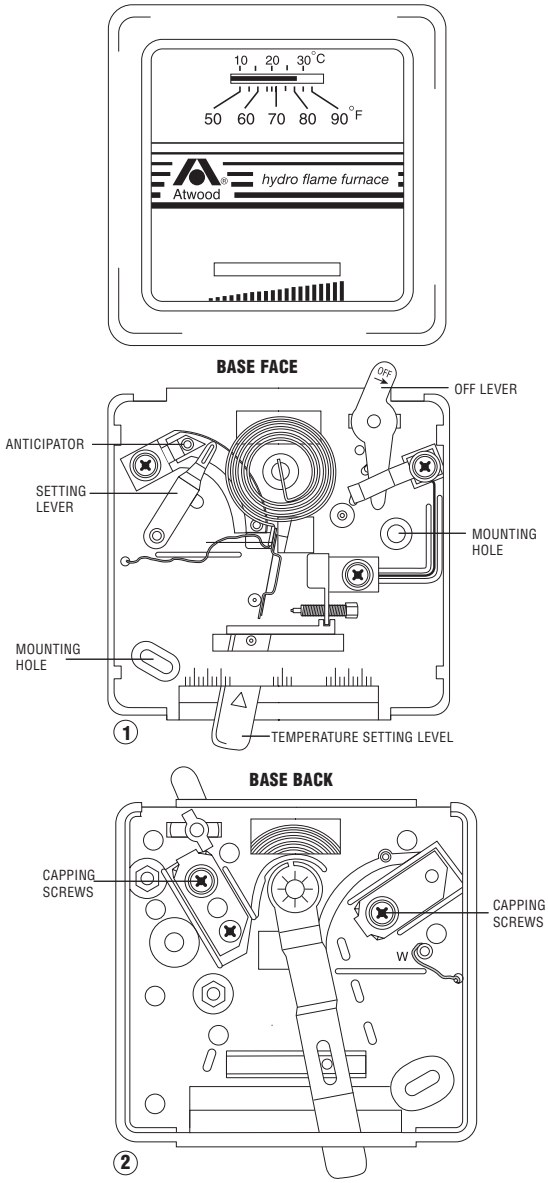

Heat/cool thermostats are being used in conjunction with air conditioners and our furnace. The warranty, installation instructions and diagnostic information is provided by the manufacturer of the thermostat. However, if you need to isolate a furnace problem or a dual thermostat problem, by-pass the furnace wires at the thermostat. If the furnace ignites and heats, you have a thermostat problem. If the furnace does not run, the problem is in the furnace, and you should consult the trouble shooting guides in the back of this manual.

- The hydro flame thermostat is equipped with a heat anticipator which allows one to adjust the length of the heating cycles. A furnace should cycle 5-6 times an hour.

  a. The anticipator is set at 1.0 on all hydro flame thermostats. If you want to shorten the heating cycle, move anticipator to a lower amp setting. You should not set lower than .48 which is the amperage rating of the gas valve. Setting any lower could burn out the anticipator wire.

Note: Heat anticipator adjustments are not covered under warranty.

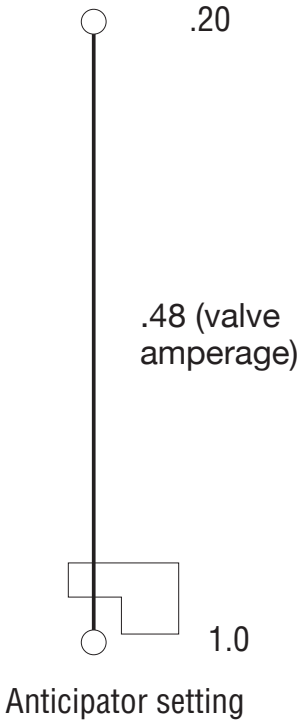

THERMOSTAT LOCATION

- It should be on an inside wall 48″-54″ above the floor on an inside wall.
- It should not be near areas of extreme heat or cold.
- It should not be located directly across from a heat duct.
- If installed on an outside wall, a 3/4″ spacer must be used behind legs of thermostat. This will allow the thermostat to sense the air temperature and not the temperature of the wall.
- A minimum of 22 gauge wire should be used to connect the thermostat to the furnace. We recommend 18 gauge stranded wire.

Atwood®
Atwood Mobile Products LLC
1120 North Main Street • Elkhart, IN 46514
PHONE: 574•264•2131 **FAX**: 574•262•2550
INTERNET: http://www.atwoodmobile.com

hydro flame Thermostat

TROUBLE SHOOTING GUIDE

Effective: 8/10/98

Guides are only intended for use on Atwood® products by service technicians who have successfully completed Atwood® training. This guide should be used in conjunction with the appropriate Instruction Manual provided with the product and any applicable Industry Standards. This is not intended to be a complete list. Please direct questions concerning service of Atwood® products to 866-869-3118 option 5 before proceeding.

CAUSE	SOLUTION
BLOWER DOES NOT RUN	
Temperature selector out of place	Re-set to desired position
Thermostat wires broken or disconnected	Not covered under warranty.
Heat anticipator burned out	Dead short (not covered under warranty). Repair short and then replace thermostat. Faulty relay drawing more than 1 amp. Replace relay and thermostat. Covered under warranty.
No continuity through thermostat with contacts closed and switch on.	Replace thermostat.
Continuity through thermostat with contacts closed and switch on.	• Check and reestablish power to thermostat • Reset tripped circuit breaker. • Correct poor ground. • Correct any loose wires. • Replace defective relay. • Replace defective motor.
FURNACE DOES NOT CYCLE PROPERLY	
Furnace cycles too quickly	Move anticipator to a higher amp setting to lengthen cycle. NOT covered under warranty. Thermostat located too close to a heat duct. Move thermostat or duct outlet. NOT covered under warranty.
High temperature variance	Move anticipator to a lower amp setting to shorten cycle. NOT covered under warranty.

Note: When the anticipator is set properly and the heating system has operated for a few hours, the furnace should cycle 5-6 time per hour.

Circuit Breaker & Motor

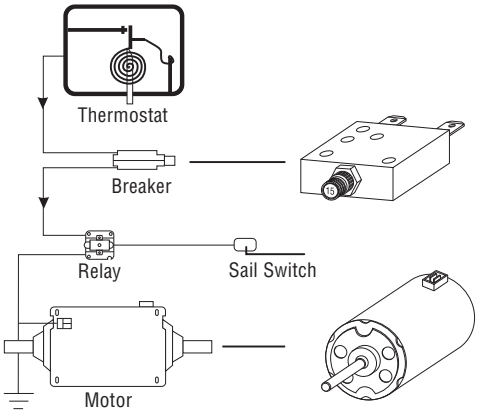

The circuit breaker is actually a re-settable heat sensitive device designed to protect the blower motor. In a furnace, this heat evidences itself in the form of an amp draw. Therefore, since there are different size motors, there are different amperage ratings on circuit breakers. When replacing a breaker, do so with similar amperage rated breaker.

The breakers used on our furnaces are externally mounted and are of a slow blow style. This means that due to their location on our furnaces, the heat of the furnace cannot affect their operation. Likewise, short amperage spikes will not cause them to trip either. The motor will have to produce an excessive and prolonged amperage draw to trip it.

When a circuit breaker trips, it does so because a problem exists. After re-setting it, voltage and amperage draws should be taken to determine where the problem is. These readings will determine if you have a power source, breaker or motor problem.

On our 79 and 85 series furnaces we have two different types of breakers. The earlier 79 and 85 models and all 89 models used a rectangular slow blow breaker as pictured. Its sole purpose was to protect the motor. On late model 79 and 85 models we started using a finger-size combination breaker and on/off switch. Code required us to be able to shut the gas off at the appliance when servicing it. This switch accomplishes this by shutting off power to the blower motor, which in turn prevents the gas ignition system from coming on. Current production no longer uses a small rectangular ON/OFF switch combination.

Therefore, it is not only important to use the same amperage rated breaker, but also the same style of breaker.

As stated earlier, there are different size motors as well. They are different because they must be compatible with the various BTU capacities. Each BTU of furnace requires a specific motor RPM in order for proper ignition and combustion to take place.

Since it is very important that the proper motor be used for a specific model of furnace, you must identify if you have the correct motor. To help identify a motor, a 'PF' number is embossed in the metal housing of the motor. If you look at the parts reference in the back of this manual, not only are the proper hydro flame part numbers for the motor needed on a specific furnace noted, but the corresponding 'PF' number is also shown.

A new motor has been introduced into all of the 85 and 89 series DC furnaces. This new motor design is hard-wired. As a result the brushes are longer and should increase motor life considerably. As a result, the motor kit will now contain a motor mount bracket, the motor and installation instructions and will add a little more time to the installation process. However, these are the only motors that will be available as replacements in the field.

Circuit Boards

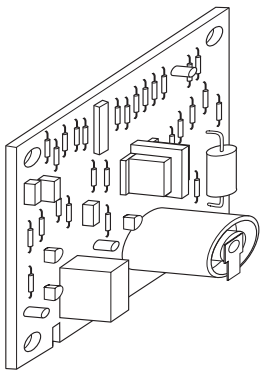

The circuit board has three functions: create a spark, open the gas valve and lock-out when one of the prior two functions do not occur during the ignition cycle. As long as the circuit board is receiving the minimum micro-amps from the electrode assembly, it will not lock out. It has a 15 second ignition delay as well. This delay allows the furnace to purge any unburned gas in the combustion chamber before ignition occurs.

We have two basic types of circuit boards. The board we currently use is a micro-processor board. It is a three trial ignition board and operates in conjunction with a single or local sense electrode (an electrode that has only one probe that both sparks and senses).

Various versions of the 12VDC analog board have been used. The part numbers of those boards are noted below. Fortunately, the local sense micro-processor board is the only one you will have to stock for replacement on a 12VDC furnace. Plastic spacers will be provided with the board so that it can be mounted on metal surfaces that you may encounter sometimes on various models of our furnace. The only other circuit board that you will have to stock is the AC version.

FENWAL, Relay on board with blower control retrofit kit	31501
FENWAL, Relay on board (NLA)	36716
CHANNEL, 2-Stage ignition board	34696
CHANNEL, 2-Stage motor control board	34109
FENWAL, Relay on board with blower control AC kit	37515

Relay

ALL CURRENT PRODUCTION MODELS USE THE RELAY ON THE CIRCUIT BOARD

This component is commonly referred to as a time delay relay. **The same relay is used on the 7900, 8500 and 8900 series furnaces.**

FUNCTION - The relay has one primary function.

- to purge the plenum of heat and the chamber of any unburned gases after each heating cycle.

OPERATION - The motor voltage path of relay is normally open. There should always be voltage from the circuit breaker to the relay terminal of the circuit breaker. There should always be continuity between the thermostat terminal connection and ground terminal connection or the relay.

Only when the thermostat contacts are closed is voltage supplied to the thermostat terminal of the relay. This voltage heats a coil in the relay body. In approximately 20 seconds this heated coil causes a bimetal disc to close. Voltage now passes through the relay and on to the motor, which in turn should allow the furnace to ignite and start a heating cycle.

When a heating cycle is complete, the contacts of the thermostat open and voltage ceases to the heater coil of the relay. In approximately 45 - 90 seconds, the heater coil cools down, the bi-metal disc opens and voltage ceases to the motor as well.

AMP Draw - The relay should draw no more than 1 amp. If the relay should draw more than 1 amp, it will burn out the anticipator.

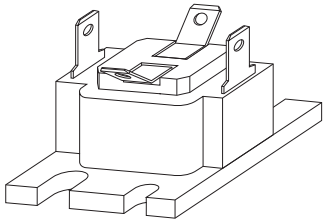

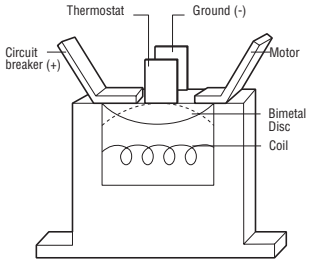

Sail Switch

The sail switch is an air proving device. It is a safety component that will not let ignition occur until it sees 75% of the motor's rpm's. It insures that the combustion wheel is rotating fast enough so that there is a proper air and gas mixture for smooth ignition.

There are different size sail switches. The noticeable difference is the size of the paddle on the switch. Each switch is matched to the size of motor it must respond to.

NOTE: All 85-IV use the same sail switch.

When the paddle of the switch is depressed, there should be continuity through the switch. If a sail switch needs to be replaced, it should be replaced with the exact same size. If a larger switch than the original is used, it will probably not close when the motor reaches 75% of its rpm's and therefore keep ignition from occurring.

The most common problems with these switches are bent paddles, loose wire connections or an obstruction between the paddle and switch contact.

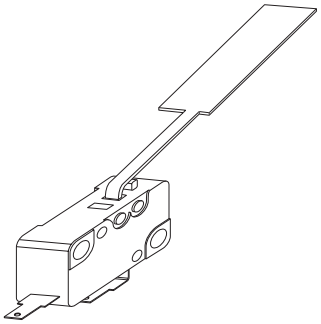

Limit Switch

The limit switch is a very important safety device on a furnace. The function of a limit switch is to protect the furnace from overheating. These switches come in a variety of temperature ratings and are located at critical locations above the heat chamber on the various models of furnaces. Therefore, it is very important that when one of these switches is replaced, you do so with the properly rated switch.

Failure to do so could cause an unsafe condition with the heating system. When in doubt as to whether you are using the proper limit switch for a furnace, look at the temperature at the base of the switch and match it to the temperature and related switch noted below.

Part Number 36205 is a thermal cut-off and was a specific safety component used on some 89-II furnaces. It was located above the chamber and tripped in the event of a burn through chamber.

79-II, 89-II, 89-III, 2540
Part # 37021 (was 34781)
3/16˝ / 3/16˝ terminals

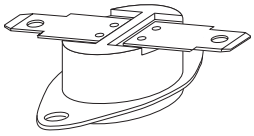

85-II, 89-I
Part # 35132
1/4˝ terminals

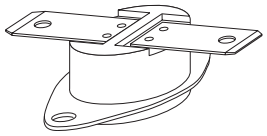

85-III, 85-IV, 1522, 2334
Part # 37022 (was 36176)
1/4˝ terminals

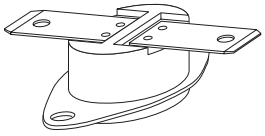

Markings on Switch	**L77 or L170 (170°F)**	**L54 (130°F)**	**L190 (190°F)**

Dual Solenoid Gas Valve

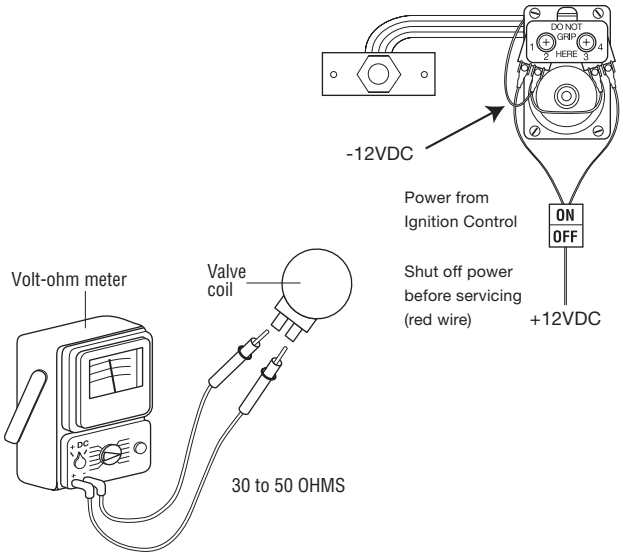

We use a White Rodgers dual solenoid gas valve on all of our furnaces. The valve requires a minimum of 10.5VDC in order to open and when open, should draw no more than .48 amps.

Later model furnaces have an ON/OFF switch on the wire to the gas valve. This replaces the manual shut-off that was used on earlier model furnaces. You can now electrically shut off the gas to the valve with this switch before servicing the furnace.

When these valves become inoperative, it is typically one or both of the coils that fail. In order to determine which coil is at fault, you need to conduct a continuity test on both leads of each coil. The resistance on a good coil will be 30-50 ohms. If the resistance is not in this range the coil is defective and must be replaced.

The coils on this valve are wired in parallel. Therefore, when replacing the wires on these coils, it is important that they be attached per the diagram. The red 12VDC supply wires must be attached to terminals 1 and 4 and the ground wires must be attached to terminal 2 and 3. If the coils are mistakenly wired in series and there is a marginal supply voltage, there will be a voltage drop from coil to coil and the valve will not open.

Burner Head, Electrode and Valve Assembly

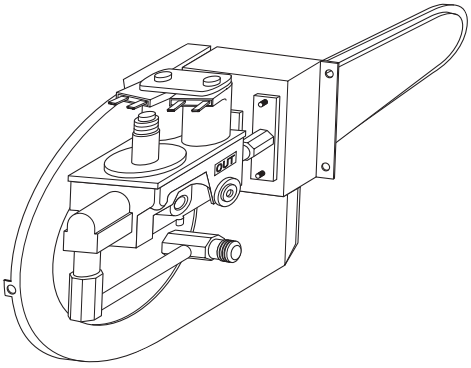

The burner head, electrode and gas valve on the late model 79 series furnace are individually accessible. However, to service these same components on the late model 85 and 89 series, remove the complete assembly.

The different models and/or BTU ranges of furnaces use different burner heads. These burners differ by the size of the top gas port holes or the deflector that runs through the throat of the burner. If the wrong one is used, it may cause an ignition, sooting or flame sense problem.

When an electrode assembly is installed on a furnace, they will already be in a fixed and predetermined position above the burner. The only adjustment that you may need to do is on the sparking and ground electrode points. This gap should be 1/8˝. However, when the porcelain on an electrode assembly becomes cracked, it will not function properly and will have to be replaced. When doing so, use the proper electrode assembly for the model of furnace being serviced.

There are only two versions of the solenoid valve available for the models of furnaces noted above. These two valves are identical except for the gas inlet porting on them (side or front). As stated earlier in this manual though, the coils are what usually breakdown but they are easily replaceable.

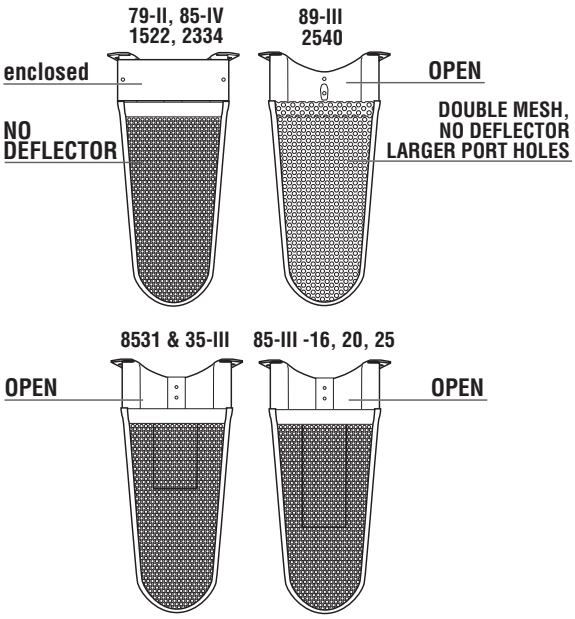

The different models and/or BTU ranges of furnaces use different burner heads. These burners differ by the size of the top gas port holes or the deflector that runs through the throat of the burner. If the wrong one is used, it may cause an ignition, sooting or flame sense problem.

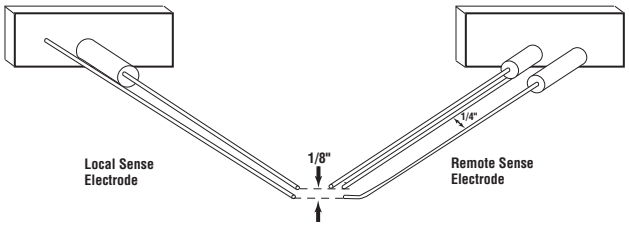

The 4 Always

Remember that you are working on a heating system and not just a furnace. A majority of furnace problems lie outside of the product itself. Therefore, when trouble-shooting a furnace problem, always check the following items before testing or replacing components.

#1 - GAS PRESSURE
The gas pressure should be set at a minimum of 11˝ W.C. with a minimum of 50% and ideally 100% of the gas fired appliances operating. You should test this pressure with a U-tube Manometer only. If you choose to use a dial-type manometer, calibrate it often with a U-tube manometer.

#2 - VOLTAGE
Voltage to the furnace should be between 10.5 and 13.5 VDC during operation with the interior lights ON and OFF. This check should be made with the battery, converter or generator when applicable. Use a digital or analog multi-meter when taking voltage readings. Do not use a test light. It does not provide enough useful information for proper diagnosis.

#3 - DUCTING
Always make sure that the furnace has at least the minimum number of ducts (not including closeable outlets) called out in the installation instructions. Check for proper duct connections at the furnace and heat registers, collapsed ducts and holes in the ducting. The duct runs must be as straight and tight as possible. The heat ducts must also be clean and clear of obstructions.

#4 - RETURN AIR
The return air passage should meet the minimum square inches as specified for the particular model of furnace in the installation instructions. This air passage should also be clean and clear of obstructions. Do not put air filters in this passage way. Also make sure that combustibles are not stored in the furnace compartment.

#1 - Gas Pressure

A furnace is a consumer's friend when the outside temperature gets colder. Unfortunately though, cold is an enemy of LP gas. The BTU capacity of LP per volume decreases as the outside temperature gets colder. Therefore, based on how full the LP tanks are, the ambient temperature outside and how many BTU's the furnace is, there may not be enough gas to sustain ignition on the furnace.

Using the charts below, let's say that a 40,000 BTU furnace won't fire up, and we also know that the 65 lb. LP bottle on the RV is 40% full and it is 0 degrees F. outside. One's first thought might be that the burner or valve is bad. However, if we use the chart, the vaporization capacity of the tank in these conditions is only 38,500 BTU's. The furnace is not going to perform very well because there is insufficient BTU capacity in the tank.

If you were to put an insulated fire resistant blanket over the tanks and a 75 watt light bulb under that, you would probably raise the temperature of the bottles 10-20 degrees and almost double the BTU capacity of the tank. This in turn would allow the furnace to operate properly. So keep in mind that a furnace problem is not always a component problem.

20 lb. Bottle (*30 lb. bottle multiply X 1.40)

% Full	+20°	0°	-5°	-10°	-15°
60%	36,000	18,000	12,750	8,500	4,250
50%	32,400	16,200	12,150	8,100	4,050
40%	28,800	14,400	11,400	7,600	3,800
30%	25,200	12,600	10,450	7,300	3,150
20%	21,600	10,800	8,100	5,400	2,700
10%	16,200	8,100	6,075	4,050	2,025

65 lb. Under Mtd. LP Gas Tank BTU available at

% Full	+20°	0°	-5°	-10°	-15°
60%	95,600	47,800	36,000	23,900	12,100
50%	86,000	43,000	32,250	21,500	11,750
40%	77,000	38,500	29,250	19,250	9,625
30%	68,000	34,000	25,500	17,000	8,500
20%	58,000	29,000	21,750	14,500	7,250
10%	43,200	21,600	16,200	10,800	5,400

#2 - Voltage

See **4 Always** previous page.

#3 - Minimum Ducting Requirements

The various BTU sizes of 85, 89 and 2-stage series furnaces require a minimum number of square inches of heat ducting. The most common size of soft ducting is 4˝ diameter. Therefore, since a 4˝ duct is equal to 12 square inches, we can call out the minimum number of ducts needed for the models of furnaces noted below.

Furnace Model	Minimum Ducting	Minimum Ducts
8516, 8520	24 sq. in.	2
8525. 8531	36 sq. in.	3
8535, 8935, 8940, 1522, 2334, 2540	48 sq. in.	4

Ducting Locations 85, 89 and 2-Stage Series Furnaces

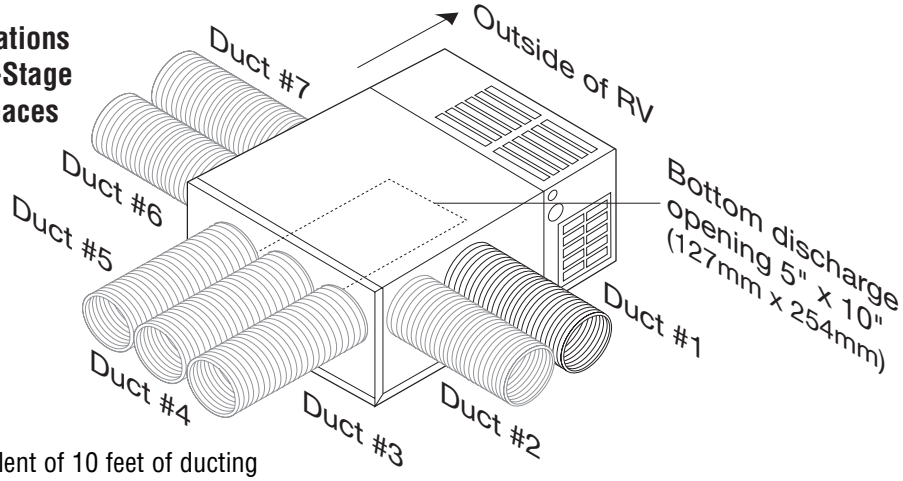

CAUTION - Ducting Installation

4˝ Flexible Hose
- each 90° bend adds the equivalent of 10 feet of ducting
- ducting should be securely attached to furnace
- each run should be as straight and short as possible

2˝ Flexible Hose
- 2 - 2˝ duct runs do not equal one 4˝ duct. A 2˝ duct is only 3 sq/inches
- 2˝ duct adapters are available
- 2˝ ducts are ideally suited for bathroom and holding tank compartments

Closeable Outlets
- a closeable outlet does not contribute to the minimum of total outlets recommended for a furnace.

Bottom Discharge
- furnace must be completely sealed to floor and plenum with a bottom discharge gasket, with no air gaps.
- if furnace is installed in middle of run, the main duct run must be a minimum of 24 sq/inches.
- if furnace is installed at the end of the run, the main duct must be 48 sq/inches.

#4 - Return Air

This return air requirement can be met in a couple of ways.

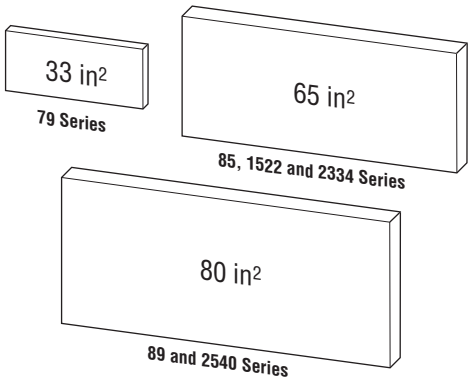

- The return air grille mounted on an inside wall of the trailer, exposed to the cabinet area of the furnace is the most common mounting used on the 85, 89 and 2-Stage Series furnaces.
- Another option is to provide openings at various locations in the furnace cabinet area capable of drawing air from inside the trailer (ie. rowtered holes at bases of sofas or walls, etc.).

The total square inches of openings must meet minimum requirements.

Do not place any types of air filters in front of or behind the return air door. Blocking this area will substantially decrease the return air causing - less air delivery to the heat registers - short cycle of the furnace - limiting of the furnace.

We recommend electrical air filters that can be placed anywhere in the open living area of the recreation vehicle. They can be purchased in most hardware stores.

Quick Diagnostics For 2 Stage Furnaces

Tools Required: Multimeter
All tests performed at Control Board.
Wire color codes:

WHITE:
With the ON/OFF Switch turned on, there will always be DC power at the white connection. The thermostat can be turned on or off. If there is no power at this location, check the ON/OFF Switch. If the Switch is in the on position, check to confirm that the Limit Switch is closed. If not, replace the Limit Switch. If the Limit Switch is closed, check to confirm DC coming into red wire into furnace. Correct problem, fuse, or disconnected red wire.

BLACK:
Black wire comes from the Sail Switch. There will be no power at this location unless furnace blower is operating. If the blower is running at least 6 volts and there is no reading on the black connection, replace Sail Switch.

BLUE: 1
Power from the Thermostat. The Thermostat provides power to the furnace as a signal rather than typical, straight DC voltage. With the meter attached to the blue wire, you will see varying voltages displayed, rather than one solid reading like you will see with our standard furnace. If no reading, the Thermostat is probably defective. Before the Thermostat is replaced, check all wiring.

BLUE: 2
Power from Control Board, to the Ignition Board. Reading at the blue 2 is straight DC voltage. There is no reading at this location when the Thermostat is in the fan only mode. When the Thermostat is turned to heat mode, you will see a reading at blue 2. If there is no power on blue 2 when the thermostat is in heat mode, replace the Control Board.

ORANGE:
Ignore

BROWN:
Power from Control Board to third coil on Valve, high heat only. During low heat mode there will be no reading at the brown wire connection. When the mode is changed to high heat there will be a solid voltage reading at this location. If no reading during high heat, replace Control Board.

Atwood®
Atwood Mobile Products LLC
1120 North Main Street • Elkhart, IN 46514
PHONE: 574•264•2131 **FAX**: 574•262•2550
INTERNET: http://www.atwoodmobile.com

FURNACE -Electronic Ignition Model

TROUBLE SHOOTING GUIDE

Effective: 8/10/98

Guides are only intended for use on Atwood® products by service technicians who have successfully completed Atwood® training. This guide should be used in conjunction with the appropriate Instruction Manual provided with the product and any applicable Industry Standards. This is not intended to be a complete list. Please direct questions concerning service of Atwood® products to 866-869-3118 option 5 before proceeding.

CAUSE	SOLUTION
BURNER FAILS TO IGNITE AND - BLOWER FAILS TO RUN	
No electrical power to the furnace	Reconnect or replace power source.*
Thermostat defective	Replace thermostat
Thermostat wires broken or shorted	Replace wire or wires*
Current overload protector device	Reset circuit breaker. Check amp draw from motor
Defective or tripped (circuit breaker).	According to furnace's specifications.
Blower relay defective	Replace relay
Wire off motor	Reconnect wire
Wire off relay	Reconnect wire
Improper ground	Clean and secure grounds*
Blower motor defective	Replace motor
BLOWER RUNS - BUT FAILS TO IGNITE	
Low Voltage/High Voltage	Correct Power Supply*
Gas pressure incorrect	Set pressure to a minimum of 11˝ W.C. with all appliances running. (Replace regulator if not obtainable).*
Furnace grounding wires not secure	Clean and secure grounds established*
Air intake restricted	Clean air intake.*
12 volt polarity reversed	Correct polarity*
Motor running slow	Check voltage first. If 12 VDC while running, replace motor.
Exhaust blocked	Clean exhaust.*
Combustion air wheel loose	Reposition and tighten.
Sail switch defective or wire off	Reconnect wire or replace.
Limit switch defective or wire off	Reconnect wire or replace.
Edge connector on circuit board dirty	Clean with pencil eraser*
Circuit Board defective	Clean plug contacts. If still defective, replace. (check on board tester when possible).
Gas valve defective	Replace valve or valve coil, depending on problem encountered.
Main burner orifice blocked	Clean main burner orifice or replace.
High tension lead wire defective	Replace wire
Electrode out of adjustment	Adjust electrode (take care not to damage porcelain).
Electrode defective	Replace
Obstructed burner head	Clean burner head*
BURNER IGNITES BUT IGNITION SYSTEM "LOCKS OUT" AND TURNS BURNER OFF	
Low gas pressure	Set pressure to a minimum of 11˝ W.C. with all appliances running. Replace regulator if not obtainable.*
Exhaust blocked	Clean exhaust.*
Combustion air wheel loose	Reposition wheel and tighten
Electrodes out of adjustment	Adjust electrode according to furnace specifications.
Electrode defective	Replace electrode.
Circuit Board defective	Clean plug contacts. If still defective, replace. (Check on board tester when possible).
Flame sensor wire between electrode and circuit board defective	Replace wire
Air leakage at gaskets	Replace gasket
Defective heat exchanger	Replace heat exchanger

***indicates NOT covered under warranty.**

continued backside

FURNACE - ELECTRONIC IGNITION Model (continued) Effective: 8/10/98

CAUSE	SOLUTION
SOOTING (caused by lazy yellow flame)	
Low gas pressure	*Set pressure to a minimum of 11˝ W.C. with all appliances running. Replace regulator if not obtainable.
Low voltage	Correct power supply*
Air leakage at gaskets	Replace gaskets
Combustion wheel installed backwards or loose	Reposition wheel and tighten.
Blockage in heating chamber or burner head	Clean or replace
Faulty motor	Replace motor
Wrong vent kit or draft cap	Replace with correct vent kit or draft cap
FAN RUNS CONTINUOUSLY WITH THERMOSTAT "OFF"	
Defective thermostat	Replace thermostat
Shorted thermostat leads	*Replace wire or wires
Defective relay	Replace relay
LIMITING = BURNER CYCLING ON AND OFF - BLOWER RUNS CONSTANTLY WITH THERMOSTAT ON	
Restricted or insufficient discharge ducting	a. Ducting must meet furnace's minimum requirements.* b. No excess ducting or unnecessary bends.* c. All closeable registers must be fully open and unrestricted.*
Furnace over fired	Set gas pressure to a minimum of 11˝ W.C. with all appliances running replace regulator, if not obtainable. Also, check main burner orifice, it must comply with furnace's specifications.*
Restricted return air supply	Make sure return air meets furnace minimum requirements.*
Defective limit switch	Replace limit switch
BLOWER SHUTS OFF AT SAME TIME BURNER SHUTS OFF	
Wired wrong	*Correct wiring
Faulty relay	Replace relay.
BLOWER VIBRATES OR IS NOISY	
Motor mount loose	Tighten motor mounting bracket a. Ducting must meet furnace's minimum requirements* b. No excess ducting or unnecessary bends.* c. All closeable registers must be fully open and unrestricted.
Damaged blower wheel	Replace blower wheel.
Motor shaft bent	Replace motor
INSUFFICIENT HEAT	
Furnace under fired	1. Set gas pressure to 11˝ W.C. with all appliances running, replace regulator if not obtainable. Also, check main burner orifice, it must comply with furnace's specifications. 2. Check ducting and return air according to furnaces specifications.*
Furnace improperly sized for coach/or conditions	Replace furnace with proper size.

Atwood®
Atwood Mobile Products LLC
1120 North Main Street • Elkhart, IN 46514
PHONE: 574•264•2131 **FAX**: 574•262•2550
INTERNET: http://www.atwoodmobile.com

FURNACE - Pilot Model

TROUBLE SHOOTING GUIDE

Effective: 8/10/98

Guides are only intended for use on Atwood® products by service technicians who have successfully completed Atwood® training. This guide should be used in conjunction with the appropriate Instruction Manual provided with the product and any applicable Industry Standards. This is not intended to be a complete list. Please direct questions concerning service of Atwood® products to 866-869-3118 before proceeding.

CAUSE	SOLUTION
BURNER FAILS TO IGNITE AND - BLOWER FAILS TO RUN	
No electrical power to the furnace	Reconnect or replace power source.*
Current overload protector device	Reset circuit breaker. Check amp draw from motor defective or tripped (circuit breaker).according to furnace's specifications.
Thermostat defective	Replace thermostat.
Thermostat wires broken	Replace wire or wires.
Thermostat located in high area	Relocate thermostat.
Blower motor defective	Replace motor.
Blower relay defective	Replace relay.
Wire off motor	Reconnect wire.*
Wire off relay	Reconnect wire.*
Improper ground	Clean and secure grounds.*
BLOWER RUNS - BUT FAILS TO IGNITE	
Low Voltage/High Voltage	Correct power supply.*
12 volt polarity reversed	Correct polarity.*
Furnace grounding wires not secure	Clean and secure grounds established*
Gas valve defective	Replace valve or valve coil, depending on problem encountered.
Gas pressure incorrect	*Set pressure to a minimum of 11˝W.C. with all appliances running. (Replace regulator if not obtainable).
Limit switch defective or wire off	Reconnect wire or replace.
Sail switch defective or wire off	Reconnect wire or replace.
Burner orifice blocked	Clean main burner orifice or replace.
Combustion air wheel loose	Reposition and tighten.
Burner head adjustment	Reposition and tighten. Adjust burner according to furnace specifications.
Exhaust blocked	Clean exhaust.*
Air intake restricted	Clean air intake.*
Broken or loose wire	Replace or tighten*
Motor running slow	Check voltage first. If 12 VDC while running, replace motor.*
Pilot orifice plugged	Clean or replace orifice
Thermocouple defective	Replace thermocouple
Pilot assembly defective	Replace pilot assembly
BURNER CYCLING ON AND OFF - BLOWER RUNS CONTINUOUSLY WITH THERMOSTAT "ON"	
Restricted return air supply	Make sure return air meets furnace's minimum requirements.
Restricted discharge duct system	a. Make sure ducting meets furnace's minimum requirements.* b. Make sure there is no excess ducting or unnecessary bends.* c. Make sure any closeable registers are fully open and unrestricted.
Defective limit switch	Replace limit switch.*
Furnace over fired	Set gas pressure to a minimum of 11˝WC with all appliances running. Replace regulator if not obtainable. Also, check main burner orifice, it must comply with furnace's specifications.

***indicates NOT covered under warranty.**

continued backside

CAUSE	SOLUTION
BLOWER SHUTS OFF AT SAME TIME BURNER SHUTS OFF	
Faulty relay	Replace relay
Thermostat wired wrong	Correct wiring*
BURNER FAILS TO IGNITE AND - BLOWER FAILS TO RUN	
No electrical power to the furnace	Reconnect or replace power source.*
BLOWER VIBRATES OR IS NOISY	
Damaged blower wheel	Replace blower wheel.
Motor shaft bent	Replace motor
Loose motor	Tighten motor mounting bracket.
Restricted discharge duct system requirements.*	a. Make sure ducting meets furnace's minimum b. Make sure there is no excess ducting or unnecessary bends.* c. Make sure any closable registers are fully open and unrestricted.*
PILOT FAILS TO IGNITE OR STAY LIT	
Plugged pilot orifice	Clean or replace pilot orifice.
Electrode out of adjustment	Adjust electrode to furnace's specifications.
Pilot tube defective	Replace tube.
Piezo sparker defective	Replace sparker
Defective thermocouple	Replace thermocouple.
Defective valve	Replace valve.
Vent kit not sealed	Seal vent where it meets with the furnace.*
MICA window missing	Replace MICA
Combustion air hose plugged or collapsed	Replace combustion hose
Water in propane	Add alcohol to the propane bottles.*
Burner plate gasket or pilot gasket not sealed	Replace gaskets
LAZY FLAME (yellow)	
High gas pressure	*Set pressure to a minimum of 11˝ W.C. with all appliances running. Replace regulator if not obtainable.
Burner out of adjustment	Adjust burner according to furnace specification.
Combustion wheel installed backwards or loose	Reposition wheel and tighten.
Air leakage at gaskets	Replace gaskets
Low voltage	Correct power supply*
FAN RUNS CONTINUOUSLY WITH THERMOSTAT "OFF"	
Shorted thermostat leads	Replace wire or wires.
Defective relay	Replace relay
Defective thermostat	Replace thermostat
INSUFFICIENT HEAT	
Furnace under fired	1. Set gas pressure to 11˝ W.C. with all appliances running, replace regulator if not obtainable. Also, check main burner orifice, it must comply with furnace's specifications.* 2. Check ducting and return air according to furnaces specifications.
Furnace limiting	Check ducting and return air. It must comply with furnace's specifications.*

***indicates NOT covered under warranty.**

Furnace Technology

Terminology	Definition
AC Motor	A Motor operating on 120 volts A.C.
Adjustable Register	A heat outlet capable of being opened and closed.
Air Speed Indicators	(Velometer) A tool used to measure the velocity of air movement from a duct outlet.
Ambient Air Temp.	Current room air temperature.
Amp Draw	The amount of current required to run a given component.
Burn Off	The time it takes for the furnace Combustion Chamber to burn off all the oils and lubes used in production.
Burner	The component in the furnace where combustion occurs creating the main source of heat within the Combustion Chamber.
Burner Flame Lift Off	When the flame lifts off the Burner.
Candling	A small flame at the Main Burner Orifice when the Valve is in a closed position.
Circuit Breaker	A normally closed switch that automatically interrupts an electrical circuit under abnormal AMP loads.
Circulating Air	Air drawn into the furnace by the Main Air Wheel then heated and forced out the heat outlets.
Combustion Air	Air supplied to the Burner specifically for combustion.
Combustion Chamber	The component where combustion occurs and transfers heat to circulating air.
Converter	Component that is used to change 120 VAC to 12 VDC. Available in linear, pharo-resonant and switching styles.
Cycling	The normal on and off operation of the furnace controlled by the thermostat.
DC Motor	Motor operating on 12 VDC.
Circuit Board	A Circuit Board in the furnace controlling the ignition sequence and proves a flame has been established.
Electrode	Both a conductor establishing an electrical spark at the Burner to ignite the air to gas mixture, and a sensor to signal the circuit board the flame is established.

Terminology	Definition
Fan Switch	A normally open switch that closes at a set temperature allowing power flow to the motor, and allows the motor to run after the burner shuts down to cool down the combustion chamber.
Field Electrical Hook Up	The Wiring Harness that connects the furnace to the coach wiring.
Flair Fitting	Brass fitting used to connect the furnace to the gas supply.
Flash Back	A condition when the flame burns on the inside of the burner.
Flex Ducting	A round, collapsible, wire reinforced product used to deliver the heated air from the furnace to the living area.
Forced Combustion	A type of combustion when a second air wheel is used to force air into the burner to increase the air to gas mixture.
Gas Pressure	The amount of gas being supplied to the furnace, measured in column inches.
Gas Valve	A mechanical device by which the flow of gas is started or stopped by an electrical signal.
Gravity Combustion	A type of combustion using no other source but gravity to supply combustion air for the proper air to gas mixture at the burner.
Hard Ducting	(See Floor Ducting)
Heat Anticipator	Component of a Thermostat that can be adjusted to increase or decrease the length of the heating cycle.
Heating Element	(See Combustion Chamber)
High Tension Lead Wire	The wire carrying the high tension spark from Circuit Board to Electrode.
Incline Manometer	Tool used to measure Static Pressure of the furnace plenum.
Junction Box	A box inside or outside of the furnace where electrical connections are made.
Limit Switch	A normally closed switch that opens at a set temperature which does not allow the furnace to over heat.
Limiting	A condition caused by over-heating the Limit Switch The burner turns on and off during a heating cycle.

Terminology	Definition
Loud Ignition	A condition where the air to gas mixture is off and the burner lights with a loud noise.
Main Burner Orifice	The Orifice regulating the amount of gas delivered to the Burner.
Manifold	The tube delivering gas from the Gas Valve to the Main Burner Orifice.
Manual Reset Switch	A Limit Switch manually reset after reaching it's set temperature.
MicroAmps:	Amps sent back to the Circuit Board to establish a flame is present.
Millivolts	Voltage created by a Thermocouple or Thermopile.
Multi-Try Circuit Board	Circuit Board providing 2 or 3 trials for ignition.
OEM	A manufacture of recreational vehicle, "Original Equipment Manufacture".
Pig Tail	(see Field Electrical Hook Up)
Pilot Light Assembly	An assembly used to light the burner.
Plenum	The metal box enclosing the Combustion Chamber directing the heated air to the duct outlets.
Power Supply	A source of electrical power, usually a converter, inverter or battery.
Primary Air	A portion of the combustion air mixing directly in the Burner at the Main Burner Orifice.
Resonating	A whining noise created by a Burner with an improper air to gas mixture.
Return Air	Air pulled into the furnace, heated, force through duct outlets back to the living area.
Safety Lockout	Circuit Board not sensing a flame, cutting power to the Gas Valve.
Sail Switch	Air prover switch that will engage when the Blower Motor reaches 75% of the rated RPM.
Secondary Air	Combustion Air that helps complete the combustion after the Burner is on.
Sensor Wire	Wire carrying an electrical signal from the Electrode back to the Circuit Board on a remote sense system.
Slope Gauge	(see Incline Manometer)

Terminology	Definition
Sooting	A black powder that builds up around the Burner in the Combustion Chamber normally caused by an improper air to gas mixture.
Start Capacitor	A device giving an electrical boost to start an A/C motor.
Static Pressure	Amount of pressure inside the Furnace Plenum or Duct caused by the ability to dispel air out the duct outlets.
Thermocouple	Safety device used to generate an electrical signal sent to the Gas Valve to hold the Pilot Flame on.
Thermopile	Safety device much like a Thermocouple. It gives a much higher electrical output, also used to open the Main Valve with a Thermostat.
Thermostat	Device used with the Furnace to regulate the room air temperature.
Time Delay Relay	A normally open Relay. When activated closes, sending power to the Blower Motor. When deactivated allows Blower to run for a period of time to cool the Combustion Chamber.
Transformer	Device reducing 120 VAC to 24 VAC.
U-Tube	Tool measuring gas pressure in inches of water.
VOM	Meter reading voltages and OHMs resistance.
Valve Coil	Electromagnetic Coil on the Gas Valve holding and releasing a plunger to start and stop the flow of gas.

Atwood®
Atwood Mobile Products LLC
1120 North Main Street • Elkhart, IN 46514
PHONE: 574•264•2131 **FAX**: 574•262•2550
INTERNET: http://www.atwoodmobile.com

MPD 32072

hydro flame™

7900-II / 8000-II Series Furnace

Technical Installation Manual

ENGLISH, FRANCAIS (et Canada)

•Installation

Effective 5/19/06

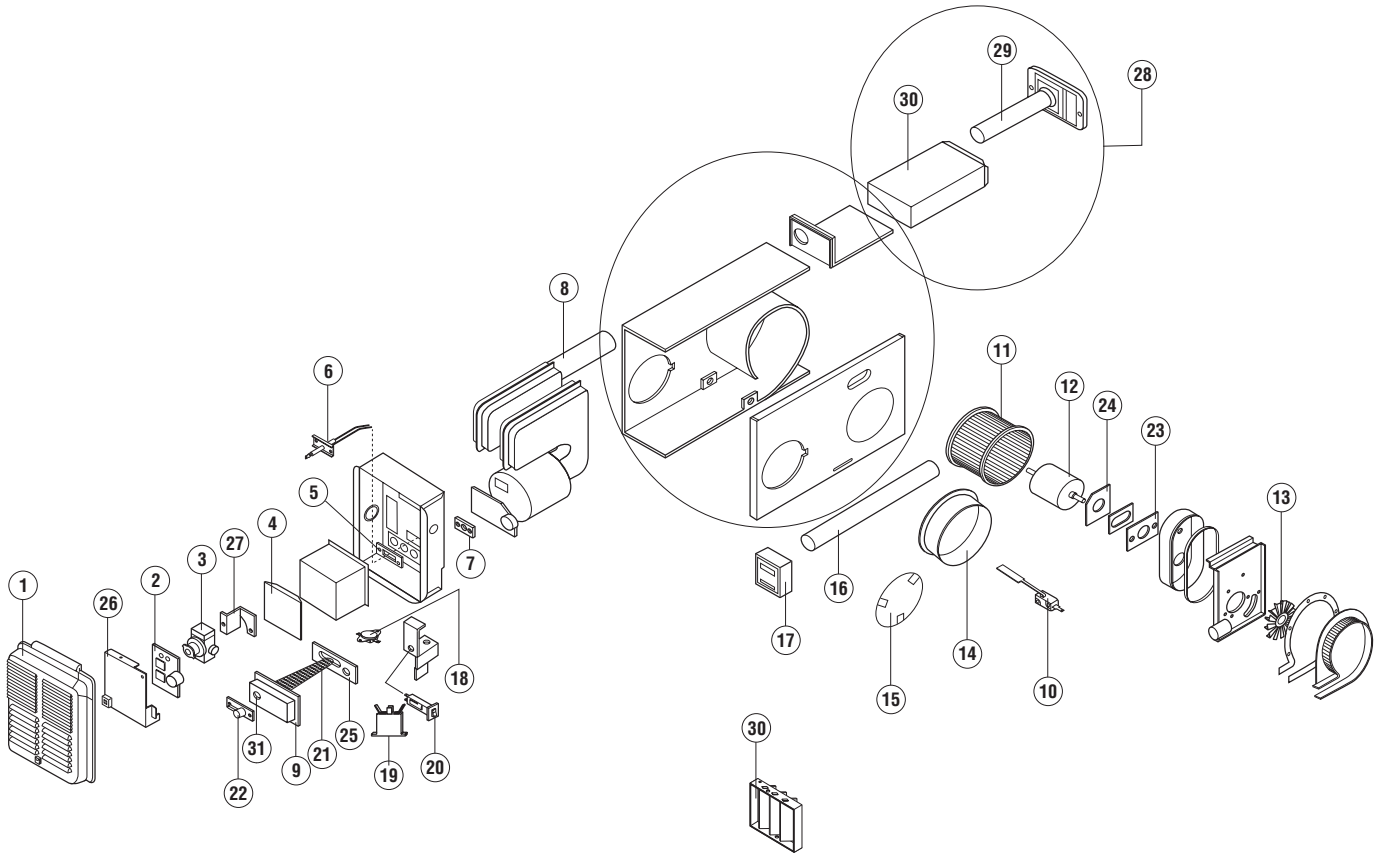

Item #	Description of Parts
1	Front Door
2	Electronic Ignition Board
3	Valve
4	Front Discharge Cover Plate
5	Electrode Cover Plate
6	Electrode
7	Electrode Gasket
8	Heat Exchanger
9	Burner Plate Gasket
10	Sail Switch (79-II)
10	Sail Switch (80-II)
11	Blower Wheel (79-II)
11	Blower Wheel (80-II)
12	Motor (79-II)
12	Motor (80-II)
13	Combustion Wheel
14	Duct Adapter
15	Duct Cover Plate
16	Air Hose
17	Thermostat -SPECIFY COLOR
18	Limit Switch (L-170)
19	Relay
20	On/Off Circuit Breaker
21	Burner Head
22	Manifold
23	Motor Gasket
24	Motor Spacer
25	Small Burner Air Baffle - SPECIFY RATE
25	Large Burner Air Baffle - SPECIFY RATE
26	Electronic Ignition Mounting Plate
27	Valve Bracket
28	Vent Kit Specify Length
29	Exhaust Tube Assembly - SPECIFY LENGTH & MATERIAL
30	Air Box Assembly - SPECIFY LENGTH
31	Orifice - SPECIFY RATE

Atwood®
Atwood Mobile Products LLC
1120 North Main Street • Elkhart, IN 46514
PHONE: 574•264•2131 **FAX**: 574•262•2550
INTERNET: http://www.atwoodmobile.com

EXCALIBUR 8500-III

October 1997

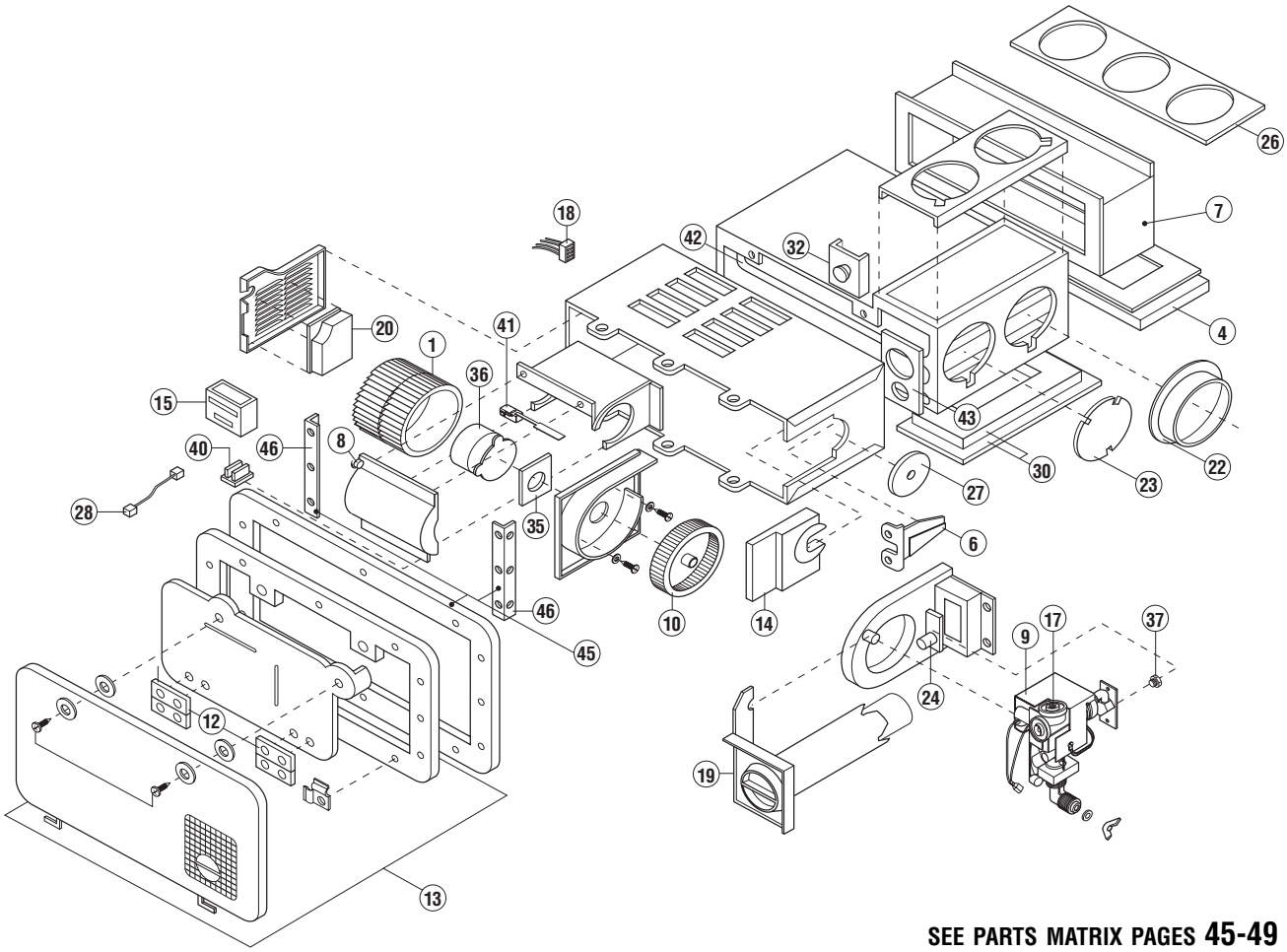

SEE PARTS MATRIX PAGES 45-49

Atwood Furnace Installation Parts

Drawing #	Description of Parts	8516	8520	8525	8531	8535
1	Blower Wheel					
4	Asmbly, Plate & Gasket					
6	Burner Asmbly					
7	Casing Extension Box					
8	Circuit Breaker					
9	Replacement Coil					
10	Combustion Wheel					
12	Door Hinges					
13	Door Asmbly	◆	◆	◆	◆	◆
14	Slide Plate					
15	Thermostat					
17	Valve					
18	Wiring Harness					
19	Draft Cap Asmbly					
20	Electronic Ignition Board (05-30)					
22	Duct Adapters					
23	Duct Cover Plate					

Drawing #	Description of Parts	8516	8520	8525	8531	8535
24	Electrode					
25	Electrode Gasket					
26	Flex Adapter Plate Asmbly					
27	Gas Inlet Plug					
28	High Tension Lead					
30	Bottom Plenum Plate					
32	Limit Switch					
35	Motor Gasket					
36	Motor Kit					
37	Orifice					
40	Relay					
41	Sail Switch					
42	Element Asmbly					
43	Exhaust Wall Gasket					
45	Recess Pan Asmbly	◆	◆	◆	◆	◆

◆ Order by Color

Atwood®
Atwood Mobile Products LLC
1120 North Main Street • Elkhart, IN 46514
PHONE: 574•264•2131 **FAX**: 574•262•2550
INTERNET: http://www.atwoodmobile.com

LITERATURE NUMBER MPD 33179

hydro flame™

8500-IV Series Furnace

MODELS 8516, 8520, 8525, 8531, 8535

Technical Installation Manual

ENGLISH, FRANCAIS (et Canada)

•Installation •Maintenance

Effective 4/10/06

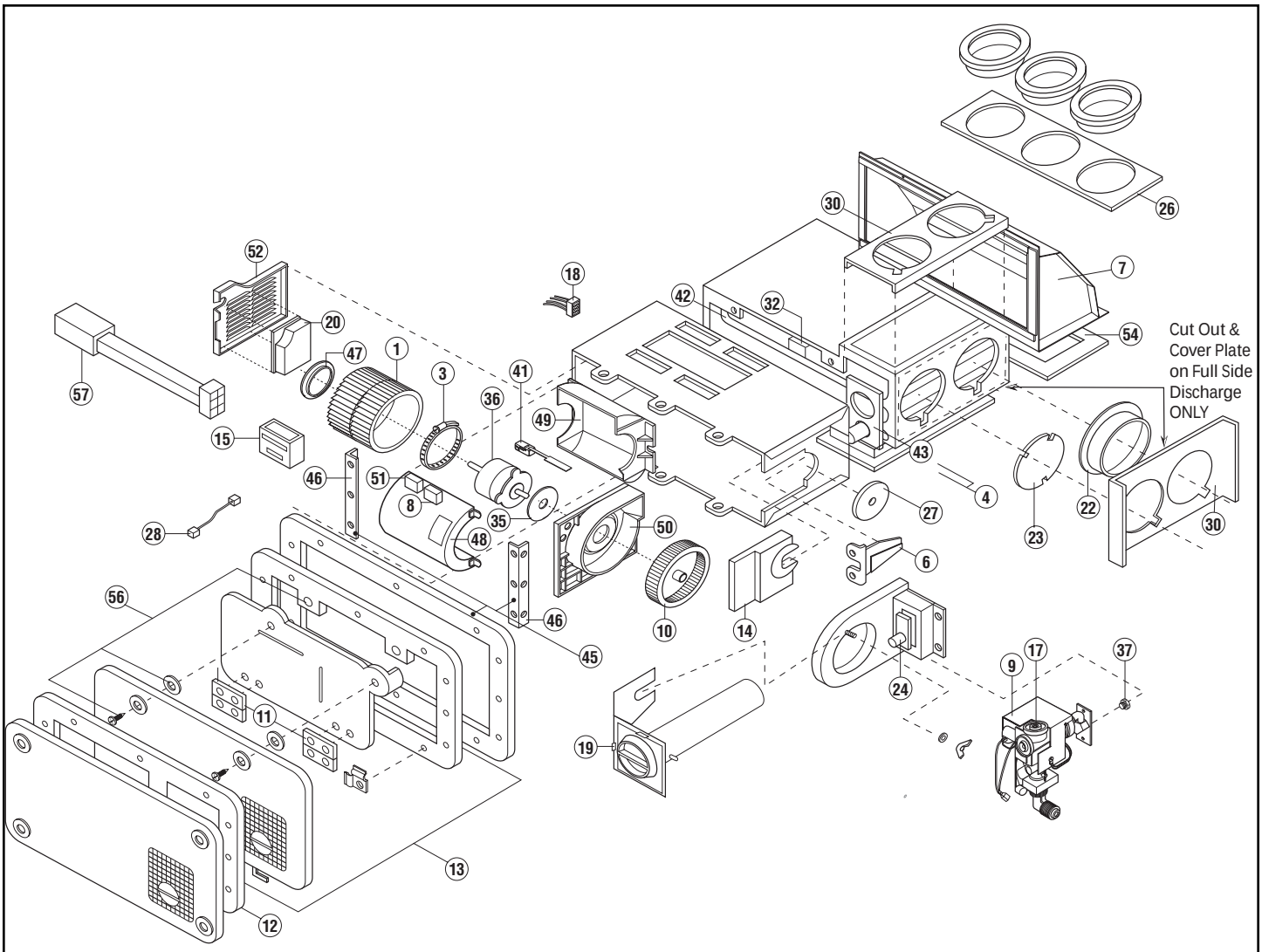

DRAWING #	DESCRIPTION
1	Blower Wheel
3	Motor Clamp
4	Gasket/Plenum Plate Kit- Top & Bottom
6	Burner Assembly
7	Extension Box
8	ON/OFF Switch
9	Replacement Coil
10	Combustion Wheel
11	Door Hinges
12	Door, Standard ORDER BY COLOR
13	Door, Deluxe -SPECIFY COLOR
14	Slide Plate
15	Thermostat - specify color
17	Valve
18	Field Wiring Harness
19	Draft Cap Assembly - Specify model
20	Electronic Ignition Board
22	Duct Adapters
23	Duct Cover Plate
24	Electrode
26	Flex Adapter Plate Assembly Kit
27	Gas Inlet Plug
28	High Tension Lead
30	Top/Bottom/Side Cover
32	Limit Switch
35	Motor Gasket
36	Motor - specify rate
37	Orifice - specify rate
41	Sail Switch
42	Element Assembly - specify model
43	Exhaust Wall Gasket
45	Recess Pan Assembly-SPECIFY COLOR
46	Mounting Bracket
47	Venturi
48	Blower Housing Back
49	Blower Housing
50	Motor/Combustion Wall
51	Circuit Breaker
52	Control Board Mounting Bracket
54	Plenum Plate, Extension Boot
56	Door Fastener Kit
57	Double Housing Field Harness
N/S	High Voltage Lead - noise suppression

Atwood®
Atwood Mobile Products LLC
1120 North Main Street • Elkhart, IN 46514
PHONE: 574•264•2131 FAX: 574•262•2550
INTERNET: http://www.atwoodmobile.com

LITERATURE NUMBER MPD 31472

hydro flame™

8500-IV-LD Series Furnace

MODELS 8516, 8520, 8525, 8531, 8535

Technical Installation Manual

ENGLISH, FRANCAIS (et Canada)

•Installation •Maintenance

Effective 9/14/04

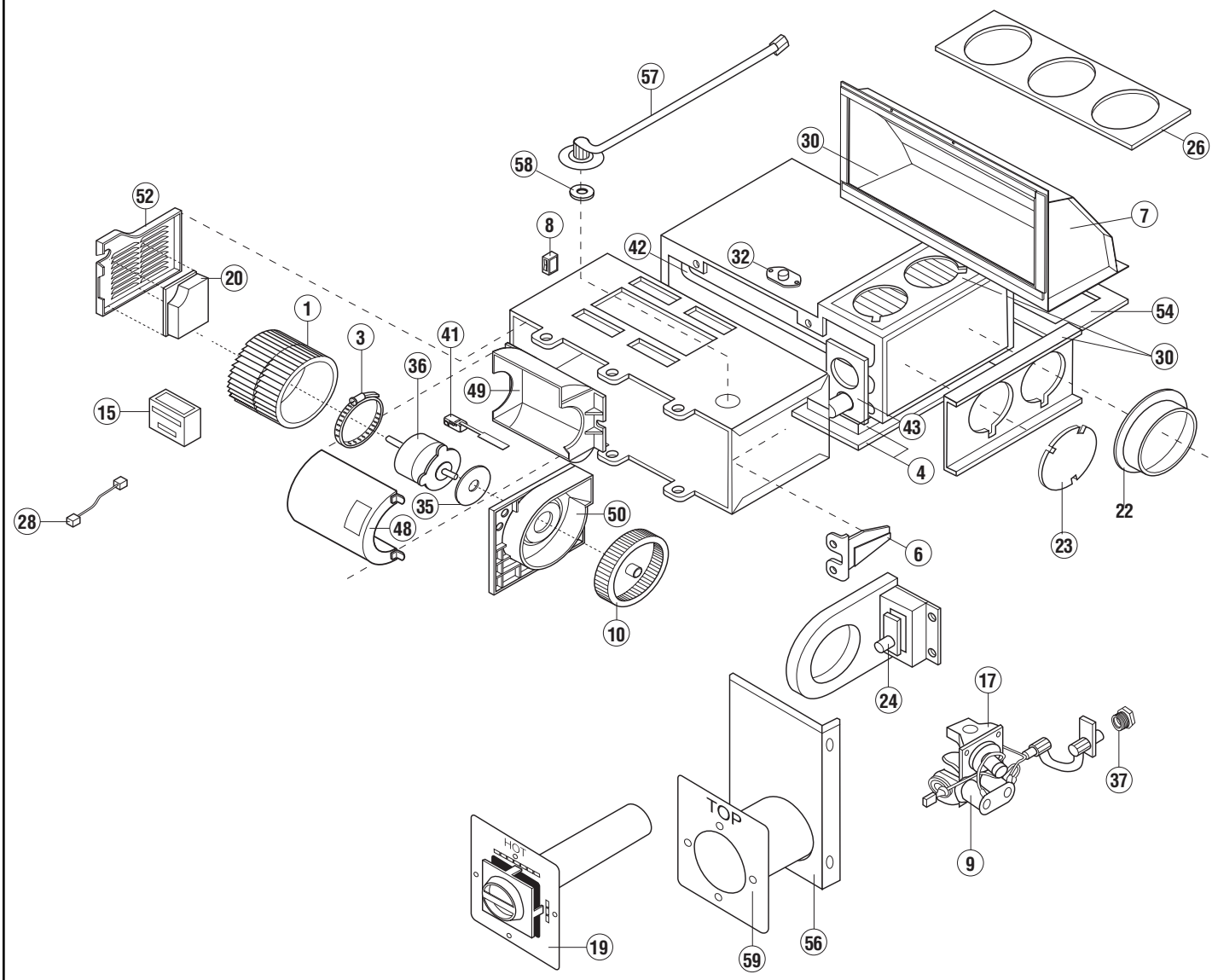

DRAWING #	DESCRIPTION				
1	Blower Wheel	19	Vent Assembly - Specify Model	41	Sail Switch
3	Motor Clamp	20	Electronic Ignition Board	42	Element Assembly - specify model
4	Gasket & Plenum Plate Kit	22	Duct Adapters	43	Exhaust Wall Gasket
6	Burner Assembly	23	Duct Cover Plate	48	Blower Housing Back
7	Extension Box	24	Electrode	49	Blower Housing
8	ON/OFF Switch / Circuit Breaker - Specify Model	26	Flex Adapter Plate Assembly Kit	50	Motor/Combustion Wall
9	Replacement Coil	28	High Tension Lead Cover	52	Control Board Mounting Bracket
10	Combustion Wheel	30	Top/Bottom/Side Plate	54	Plenum Plate Extension Box Assembly
15	Thermostat - specify color	32	Limit Switch	56	Combustion Cover (specify)
17	Valve	35	Motor Gasket	57	Extended Manifold
		36	Motor - specify rate	58	Gas Line Gasket
		37	Orifice - specify rate	59	Vent Ring

Atwood®
Atwood Mobile Products LLC
1120 North Main Street • Elkhart, IN 46514
PHONE: 574•264•2131 FAX: 574•262•2550
INTERNET: http://www.atwoodmobile.com

LITERATURE NUMBER MPD 32046

hydro flame®

8900-III Series Furnace

MODELS 8935, 8940

Technical Installation Manual

ENGLISH, FRANCAIS (et Canada)

•Installation

Effective 11/27/06

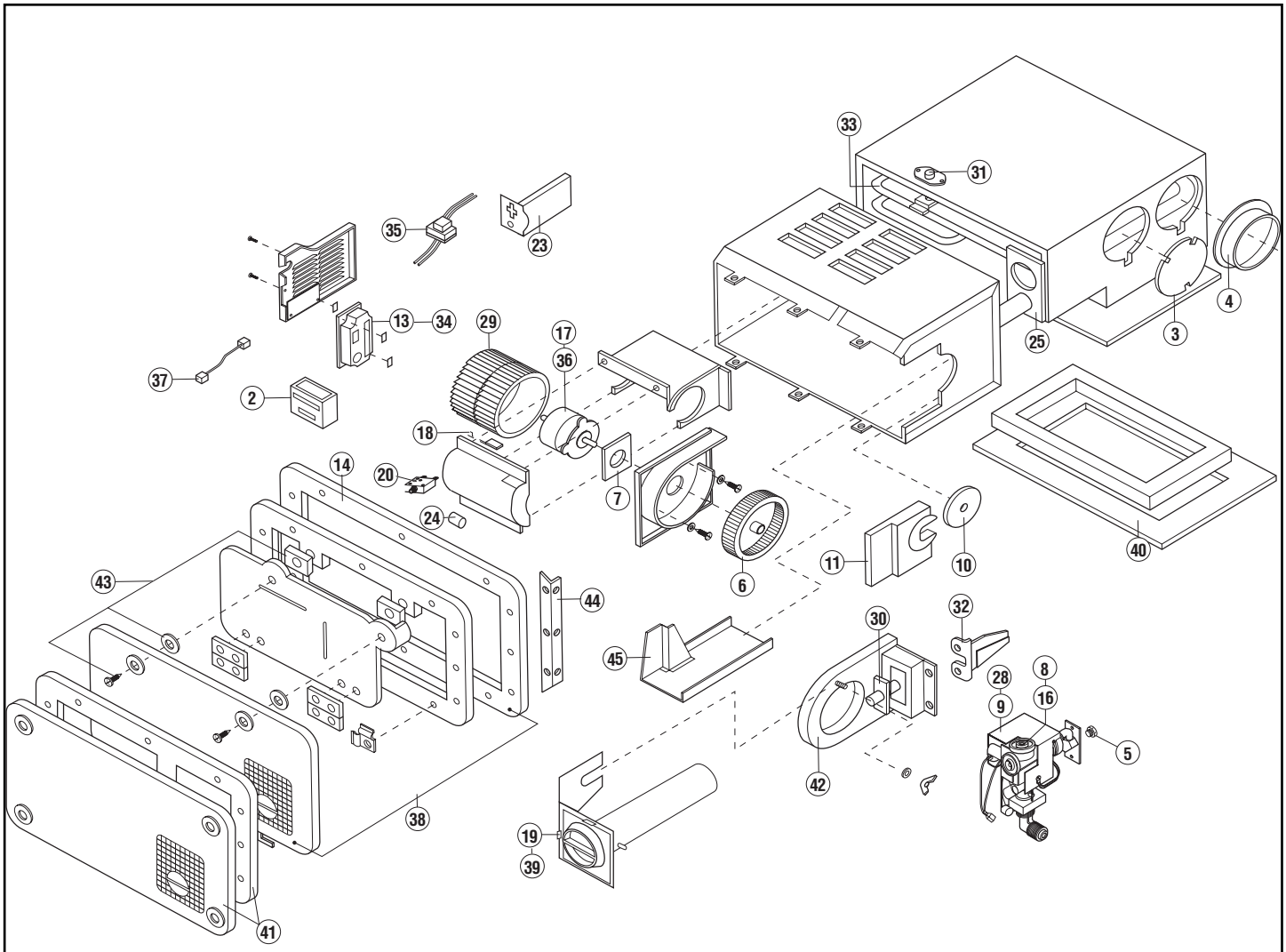

DRAWING #	DESCRIPTION OF PARTS
1	Relay
2	Thermostat - specify color
3	Duct Cover Plate
4	Duct Adapter
5	Orifice — SPECIFY GAS & BTU
6	Combustion Wheel
7	Motor Gasket
8	Valve DC
9	Valve Repl Coil DC
10	Gas Inlet Plug
11	Slide Plate
13	Electronic Ignition Board DC Kit
14	Recessed Pan (MUST ORDER BY COLOR)
16	Valve AC
17	Motor DC
18	Sail Switch
19	Draft Cap Assembly DC/AC35
20	Circuit Breaker DC
23	Junction Box Asmbly AC
24	Motor Capacitor AC
25	Element Exhaust Wall Gasket
28	Valve Replacement Coil AC
29	Blower Wheel
30	Electrode
31	Limit Switch
32	Burner Assembly
33	Element Assembly
34	Electronic Ignition Board AC Kit
35	Transformer Assembly AC
36	Motor AC
37	High Voltage Wire
38	Deluxe Door & Bezel Assembly (MUST ORDER BY COLOR)
39	Draft Cap Assembly AC/DC 40
40	Gasket & Plate Assembly
41	Standard Door & Bezel Assembly (MUST ORDER BY COLOR)
42	Combustion Cover
43	Door Fastener Kit
44	Recess Pan Bracket
45	Rain Shield
46	Vertical Gasket& Plate Assembly

Atwood®
Atwood Mobile Products LLC
1120 North Main Street • Elkhart, IN 46514
PHONE: 574•264•2131 **FAX**: 574•262•2550
INTERNET: http://www.atwoodmobile.com

LITERATURE NUMBER MPD 32047

hydro flame™

8900-III-LD Series Furnace

MODELS 8935, 8940

Technical Installation Manual

ENGLISH, FRANCAIS (et Canada)

•Installation

Effective 11/27/06

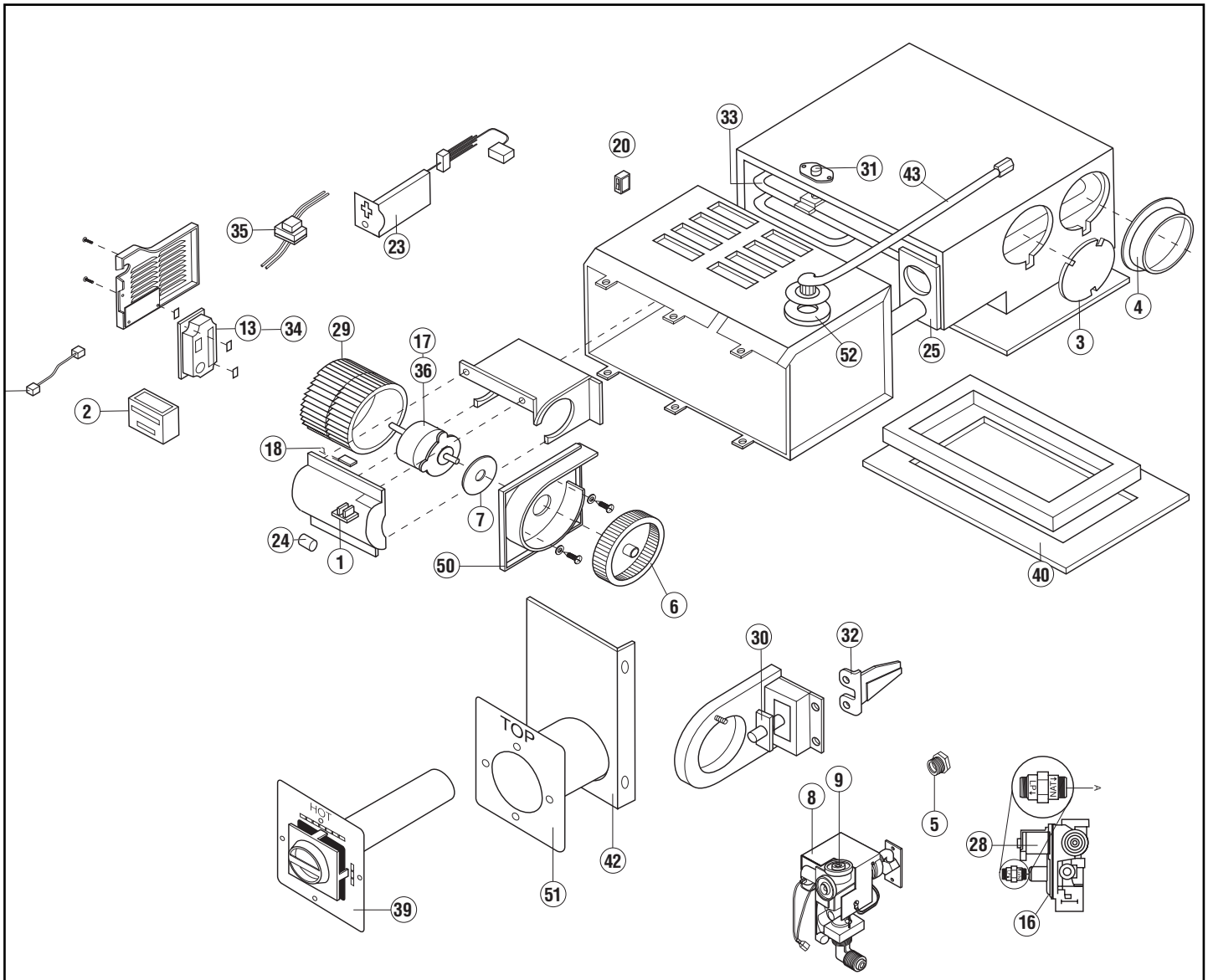

DRAWING #	DESCRIPTION OF PARTS
2	Thermostat - specify color
3	Duct Cover Plate
4	Duct Adapter
5	Orifice — SPECIFY GAS & BTU
6	Combustion Wheel
7	Motor Gasket
8	Valve DC
9	Valve Repl Coil DC
13	Electronic Ignition Board DC Kit
16	Valve AC
17	Motor DC
18	Sail Switch
20	Circuit Breaker DC
23	Junction Box Asmbly AC
24	Motor Capacitor AC
25	Element Exhaust Wall Gasket
28	Valve Replacement Coil AC
29	Blower Wheel
30	Electrode
31	Limit Switch
32	Burner Assembly
33	Element Assembly
34	Electronic Ignition Board AC Kit
35	Transformer Assembly AC
36	Motor AC
37	High Voltage Wire
39	Vent Assembly (specify model) 35/40
40	Gasket & Plate Assembly
42	Combustion Cover
43	Extended Manifold (specify)
50	Motor Wall - Specify Model
51	Vent Ring
52	Gas Line Gasket

Atwood®
Atwood Mobile Products LLC
1120 North Main Street • Elkhart, IN 46514
PHONE: 574•264•2131 **FAX**: 574•262•2550
INTERNET: http://www.atwoodmobile.com

LITERATURE NUMBER MPD 33939

hydro flame™

8500-IV
2 Stage Series Furnace
MODELS 1522, 2334
Technical Installation Manual

Patent No US 6,464,000 Other Patents Pending

ENGLISH, FRANCAIS (et Canada)

•Installation •Maintenance

Effective 9/1/03

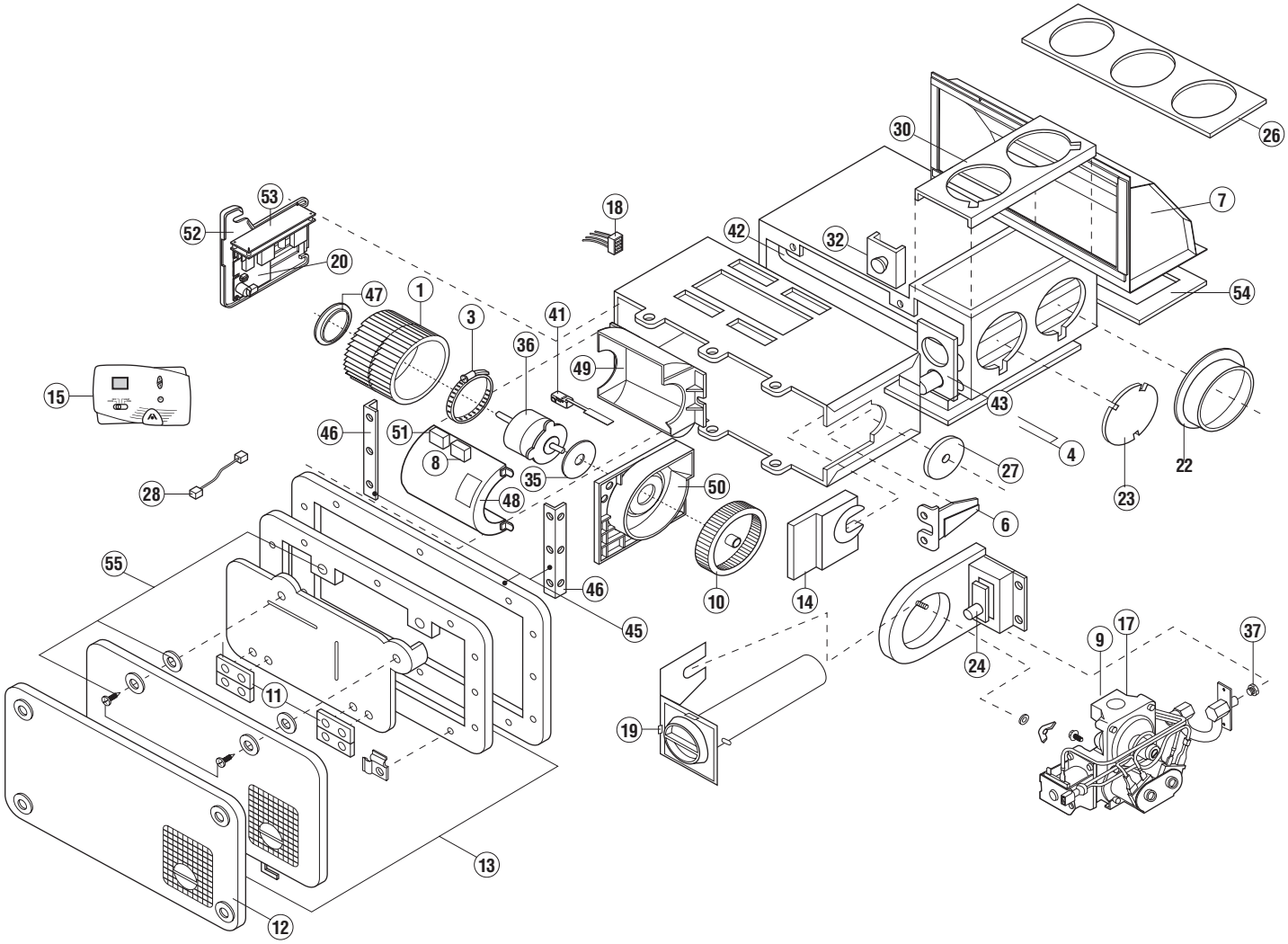

DRAWING #	DESCRIPTION
1	Blower Wheel
3	Motor Clamp
4	Gasket & Plenum Plate Kit
6	Burner Assembly
7	Extension Box
8	ON/OFF Switch
9	Mounting Bracket Valve
10	Combustion Wheel
11	Door Hinges
12	Door, Standard ORDER BY COLOR
13	Door, Deluxe -SPECIFY COLOR
14	Slide Plate
15	Dual Thermostat
17	Valves - (1522 = ORANGE) (2334 = WHITE)
18	Field Wiring Harness
19	Draft Cap Assembly
20	Electronic Ignition Board
22	Duct Adapters
23	Duct Cover Plate
24	Electrode
26	Flex Adapter Plate Assembly Kit
27	Gas Inlet Plug/Seal
28	High Tension Lead
30	Top/Bottom/Side Cover Plate
32	Limit Switch
35	Motor Gasket
36	10 VDC Motor - Specify Model
37	Orifices - (1522 = #54) (2334 = #51)
41	Sail Switch
42	Element Assembly - Specify Model
43	Exhaust Wall Gasket
45	Recess Pan Assembly-SPECIFY COLOR
46	Mounting Bracket
47	Venturi
48	Blower Housing Back
49	Blower Housing
50	Motor/Combustion Wall
51	Circuit Breaker
52	Control Board Mounting Bracket
53	Speed Control Board
54	Adapter Plate
55	Door Fastener Kit
NS	High Tension Lead Noise Suppression

Atwood®
Atwood Mobile Products LLC
1120 North Main Street • Elkhart, IN 46514
PHONE: 574•264•2131 **FAX**: 574•262•2550
INTERNET: http://www.atwoodmobile.com

LITERATURE NUMBER MPD 31473

hydro flame™

8500-IV-LD
2 Stage Series Furnace
MODELS 1522, 2334
Technical Installation Manual

Patent No US 6,464,000. 6,719,207. Other Patents Pending

ENGLISH, FRANCAIS (et Canada) **•Installation •Maintenance**

Effective 9/13/04

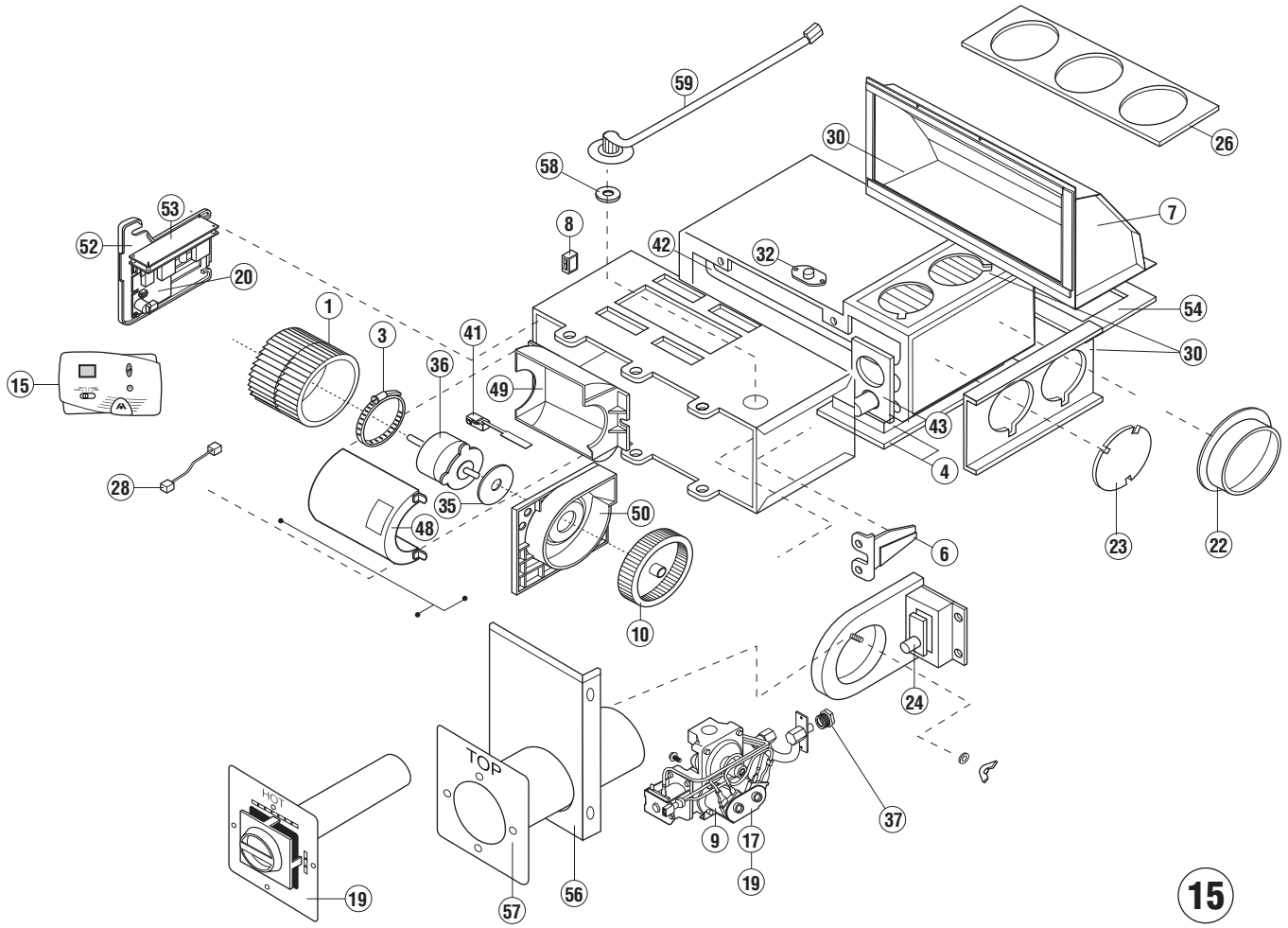

DRAWING #	DESCRIPTION				
1	Blower Wheel	20	Electronic Ignition Board	42	Element Assembly - Specify Model
3	Motor Clamp	22	Duct Adapters	43	Exhaust Wall Gasket
4	Gasket & Plenum Plate Kit	23	Duct Cover Plate	48	Blower Housing Back
6	Burner Assembly	24	Electrode	49	Blower Housing
7	Extension Box	26	Flex Adapter Plate Assembly Kit	50	Motor/Combustion Wall
8	ON/OFF Switch C/B - Specify Model	28	High Tension Lead	52	Control Board Mounting Bracket
9	Valve Coil Replacement	30	Top/Bottom/Side Side Cover Plate	53	Motor Speed Control Board
10	Combustion Wheel	32	Limit Switch	54	Adapter Plate
15	Dual Thermostat	35	Motor Gasket	56	Combustion Cover
17	Valves - (1522 ORANGE) (2334 = WHITE)	36	Motor - Specify Model	57	Vent Ring
19	Vent Assy - Specify Models	37	Orifices - (1522 = #54) (2334 = #51)	58	Gas Line Gasket
		41	Sail Switch	59	Gas Line Manifold

Atwood
Atwood Mobile Products LLC
1120 North Main Street • Elkhart, IN 46514
PHONE: 574•264•2131 FAX: 574•262•2550
INTERNET: http://www.atwoodmobile.com

LITERATURE NUMBER MPD 32044

hydro flame™

8900-III
2 Stage Series Furnace

MODEL 2540

TECHNICAL INSTALLATION MANUAL

PATENT 6,719,207. OTHER PATENTS PENDING

ENGLISH, FRANCAIS (et Canada)

•Installation

Effective 11/27/06

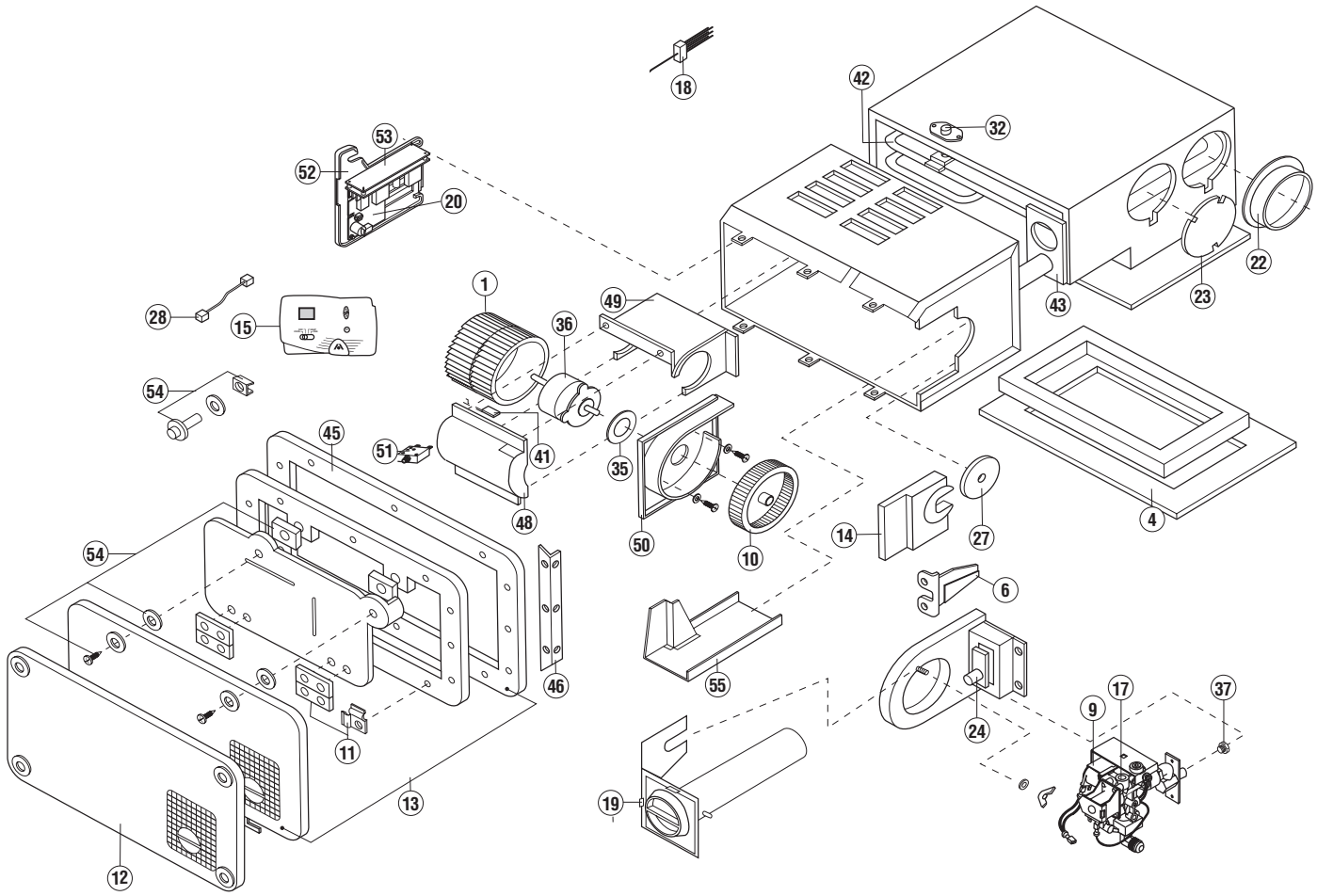

DRAWING #	DESCRIPTION
1	Blower Wheel
4	Gasket & Plenum Plate Kit
6	Burner Assembly
9	Mounting Bracket Valve
10	Combustion Wheel
11	Door Hinges
12	Door, Standard ORDER BY COLOR
13	Door, Deluxe -SPECIFY COLOR
14	Slide Plate
15	Dual Thermostat
17	Valve
18	Field Wiring Harness
19	Draft Cap Assembly
20	Electronic Ignition Board
22	Duct Adapters
23	Duct Cover Plate
24	Electrode
27	Gas Inlet Plug
28	High Tension Lead
32	Limit Switch
35	Motor Gasket
36	10 VDC Motor
37	Orifice - #49
41	Sail Switch
42	Element Assembly
43	Exhaust Wall Gasket
45	Recess Pan Assembly-SPECIFY COLOR
46	Mounting Bracket
48	Blower Housing Back
49	Blower Housing
50	Motor/Combustion Wall
51	Circuit Breaker / Switch
52	Control Board Mounting Bracket
53	Speed Control Board
54	Door Fastener Kit
55	Rain Shield
NS	High Voltage Lead Noise Suppression

Atwood®
Atwood Mobile Products LLC
1120 North Main Street • Elkhart, IN 46514
PHONE: 574•264•2131 **FAX**: 574•262•2550
INTERNET: http://www.atwoodmobile.com

LITERATURE NUMBER MPD 32045

hydro flame™

8900-III-LD
2 Stage Series Furnace

MODEL 2540

Technical Installation Manual

Patent No US 6,464,000. 6,719,207. Other Patents Pending

ENGLISH, FRANCAIS (et Canada)

•Installation

Effective 11/27/06

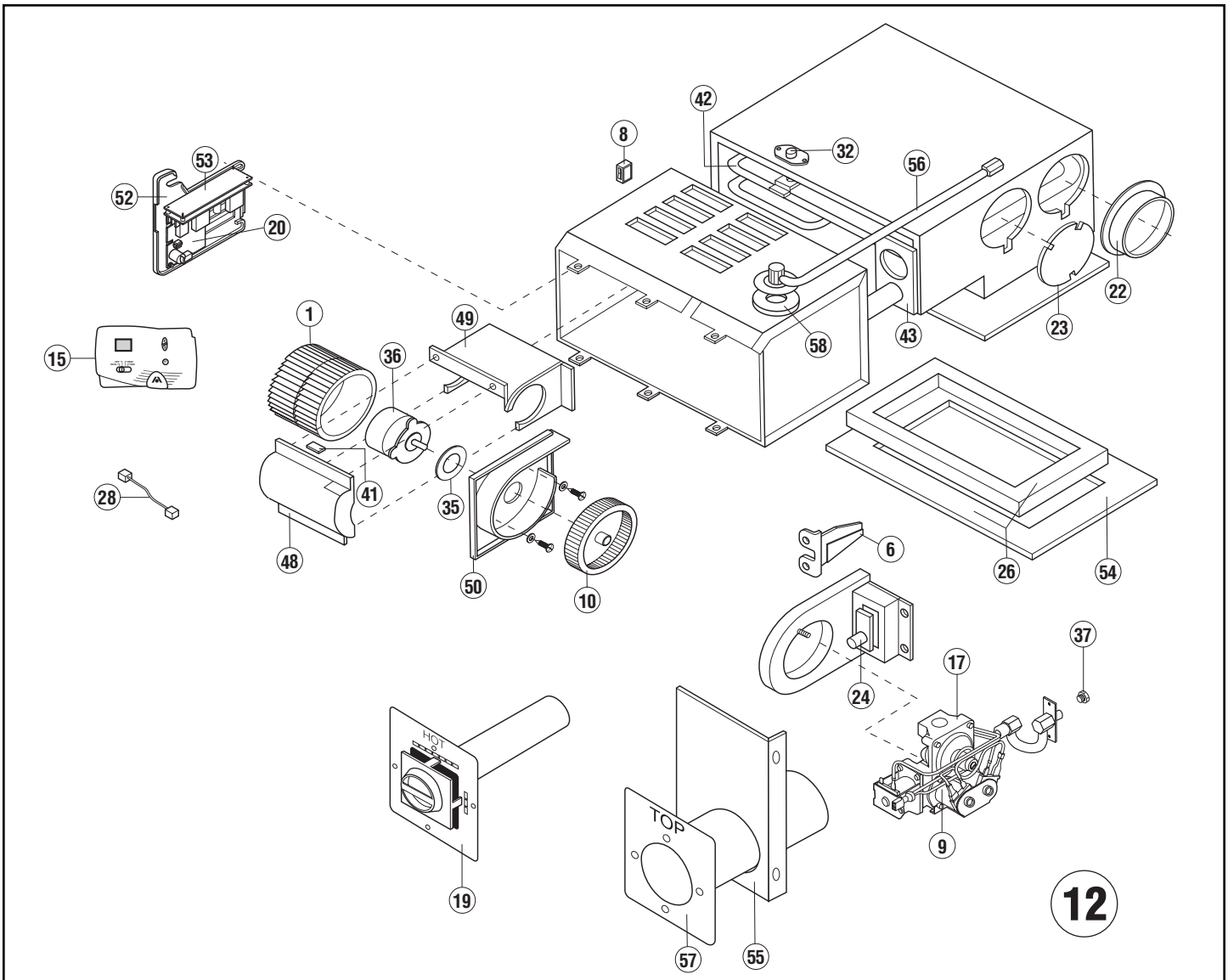

DRAWING #	DESCRIPTION				
1	Blower Wheel	23	Duct Cover Plate	48	Blower Housing Back
6	Burner Assembly	24	Electrode	49	Blower Housing
8	ON/OFF Switch / Circuit Breaker	26	Adapter Plate Assembly	50	Motor/Combustion Wall
9	Valve Coil Replacement (DC)	28	High Tension Lead	52	Control Board Mounting Bracket
10	Combustion Wheel	32	Limit Switch	53	Motor Speed Control Board
15	Dual Thermostat	35	Motor Gasket	54	Adapter Plate
17	Valve	36	Motor	55	Burner Access Cover (specify)
19	Vent Assembly	37	Orifice - #49	56	Extended Manifold
20	Electronic Ignition Board	41	Sail Switch	57	Vent Ring
22	Duct Adapters	42	Element Assembly	58	Gas Line Gasket
		43	Exhaust Wall Gasket		

hydro flame **Furnace**

REPLACEMENT PART REFERENCE

JANUARY 2007

❖NLA - No longer available ⌘While supplies last

	85-IV 16	85-IV 20	85-IV 25	85-IV 31	85-IV 35	1522 2-stage	2334 2-stage	R-25
Blowers Wheels & Covers								
37605 Blower cover - back (outside)	✗	✗	✗	✗	✗	✗	✗	
37606 Blower cover - front (inside)	✗	✗	✗	✗	✗	✗	✗	
37607 Blower Venturi Ring ❖ (NOT REQUIRED)	✗	✗	✗	✗	✗	✗	✗	✗
33126 Blower Wheel Kit	✗	✗	✗	✗	✗	✗	✗	✗
Burner								
36043 Burner Head	✗	✗	✗	✗	✗	✗	✗	
35491 Burner Head								✗
Burner Orifices								
31257 #56 16,000 BTU	✗							
31265 1.25MM 18,000 BTU		✗						
31267 #54 22,000 BTU						✗		
37580 1.45MM 25,000 BTU			✗					✗
31280 #52 31,000 BTU				✗				
32285 #51 35,000 BTU					✗		✗	
34004 Burner Orifice 42 (Nat)								✗
Circuit Board								
34109 Controller Module Motor Speed						✗	✗	
34543 Controller Module Bracket (NEED 34541)						✗	✗	
31501 Ignition Board Retrofit Kit (w/fan control)	✗	✗	✗	✗	✗			
34541 Ignition Board bracket	✗	✗	✗	✗	✗	✗	✗	
34696 Ignition Module						✗	✗	
38224 Ignition Module with Motor Control ⌘								✗
Circuit Breakers								
33780 7 AMP kit (with door)	✗	✗						
33752 10 AMP (with door)			✗	✗				
33782 15 AMP kit (with door)					✗	✗	✗	
34011 7 AMP (without door circuit breaker/on/off)	✗	✗						
34012 10 AMP (without door circuit breaker/on/off)			✗	✗				
34013 15 AMP (without door circuit breaker/on/off)					✗	✗		
34015 20 AMP (without door circuit breaker/on/off)							✗	
Combustion								
37084 Combustion Air Restricter 1-1/4"	✗					✗		✗
33128 Combustion Wheel Kit	✗	✗	✗	✗	✗	✗	✗	✗
Draft Cap								
37620 Draft Cap (5/8" Baffle) (before S/N 1260456)	✗	✗						
37619 Draft Cap (3/8" Baffle) (before S/N 1260456)			✗	✗	✗			
38141 Draft Cap (3/8" Baffle).(after S/N 1260455)			✗	✗	✗	✗	✗	
38139 Draft Cap (5/8" Baffle).(after S/N 1260455)	✗	✗						
Electrodes								
37057 Electrode	✗	✗	✗	✗	✗	✗	✗	✗
34570 Electrode for LD's	✗	✗	✗	✗	✗	✗	✗	
Gaskets								
38261 Exhaust Box Gasket ❖								✗
32926 Exhaust Wall Gasket (before S/N 1260456)	✗	✗	✗	✗	✗			✗
37956 Exhaust Wall Gasket (after S/N 1260455)	✗	✗	✗	✗	✗	✗	✗	✗
38286 Exhaust Tube Gasket ❖								✗
37600 Motor Gasket	✗	✗	✗	✗	✗	✗	✗	

hydro flame **Furnace**
REPLACEMENT PART REFERENCE
JANUARY 2007

❖NLA - No longer available ⌘While supplies last

	85-IV 16	85-IV 20	85-IV 25	85-IV 31	85-IV 35	1522 2-stage	2334 2-stage	R-25
Heating Elements								
37960 Htg Element Kit* 16, 20 (before S/N 1260456)	✗	✗						
37961 Htg Element Kit* 25 (before S/N 1260456)			✗					
37962 Htg Element Kit* 31, 35 (before S/N 1260456)				✗	✗			
38282 Htg Element ❖								✗
*Kit includes draft cap & element gasket								
Switches								
37022 Limit Switch 190˚	✗	✗	✗	✗	✗	✗	✗	✗
36121 ON/OFF Rocker Switch	✗	✗	✗	✗	✗	✗	✗	
38279 Pressure Switch ⌘								✗
36680 Sail Switch	✗	✗	✗	✗	✗	✗	✗	
Motor								
34039 Capacitor								✗
38223 Motor AC ❖								✗
37696 Motor PF 20076Q	✗	✗						
37697 Motor PF 23199Q			✗	✗				
37698 Motor PF 26157Q					✗			
37964 Motor PF 26170Q (2-STAGE)							✗	
38554 Motor PF 23211Q (2-STAGE)						✗		
37646 Motor Clamp	✗	✗	✗	✗	✗	✗	✗	
37602 Motor Lock Bracket					✗		✗	
37603 Motor Lock Bracket			✗	✗		✗		
37604 Motor Lock Bracket	✗	✗						
37801 Motor Mounting Wall Kit	✗	✗	✗	✗	✗	✗	✗	
Relay								
31017 Klixon Relay	✗	✗	✗	✗	✗			
Thermostats								
38453 Thermostat (white) Heat only HFH-2000	✗	✗	✗	✗	✗			
38452 Thermostat (brown) Heat only HFH-2000	✗	✗	✗	✗	✗			
38535 Thermostat, Digital, 2-Stage 2H2C						✗	✗	
38555 Thermostat, Digital, Single Stage 1H2C	✗	✗	✗	✗	✗			
38291 Thermostat ⌘								✗
Valves								
37383 Valve, W/R 25M16V-711	✗	✗	✗	✗	✗			
37384 Valve W/R 25M18-711								✗
37973 2-Stage Valve W/R 25M05V-701							✗	
38564 2-Stage Valve W/R 25M05V-702						✗		
37613 Valve Bracket	✗	✗	✗	✗	✗			
33475 White Rodgers Coil	✗	✗	✗	✗	✗	✗	✗	
Wires								
37987 Field Plug Assembly						✗	✗	
36290 Field Plug Assembly	✗	✗	✗	✗	✗			
36327 Field Plug Assy Special (Holiday Rambler)	✗	✗	✗	✗	✗			
37419 High Tension Wire	✗	✗	✗	✗	✗	✗	✗	✗
34571 High Tension Lead (LD'S ONLY)	✗	✗	✗	✗	✗			
37773 Shielded High Tension Wire (optional)	✗	✗	✗	✗	✗			

hydro flame **Furnace**

REPLACEMENT PART REFERENCE

JANUARY 2007

❖NLA - No longer available ⌘While supplies last

	85-IV 16	85-IV 20	85-IV 25	85-IV 31	85-IV 35	1522 2-stage	2334 2-stage	R-25
Miscellaneous								
37844 Air Intake Tube ❖								✗
32882 Door Screen	✗	✗	✗	✗	✗	✗	✗	
31474 Duct Adapter 4”	✗	✗	✗	✗	✗	✗	✗	
36688 Duct Adapter 2”	✗	✗	✗	✗	✗	✗	✗	
31361 Duct Cover Plate 4”	✗	✗	✗	✗	✗	✗	✗	
37410 Gas Inlet Plug	✗	✗	✗	✗	✗	✗	✗	
37411 Slide Plate	✗	✗	✗	✗	✗	✗	✗	
38248 Transformer ❖								✗
REPLACEMENT COMPONENTS FOR LD FURNACES ONLY								
37383 Valve	✗	✗	✗	✗	✗			
38564 Valve 2 STAGE						✗		
37973 Valve 2 STAGE							✗	
34422 Vent Assembly				✗	✗			
34423 Vent Assembly	✗	✗						
34421 Burner Access Panel/Combustion Cover	✗	✗	✗	✗	✗	✗	✗	
34530 Extended Manifold - RIGHT ANGLE INLET	✗	✗	✗	✗	✗	✗	✗	
34406 Extended Manifold - STRAIGHT	✗	✗	✗	✗	✗	✗	✗	
34645 Gas Line Gasket	✗	✗	✗	✗	✗	✗	✗	
34410 Intake Air Adapter	✗	✗	✗	✗	✗	✗	✗	
34570 Electrode	✗	✗	✗	✗	✗	✗	✗	

hydro flame **Furnace**

REPLACEMENT PART REFERENCE

JANUARY 2007

❖NLA - No longer available ⌘While supplies last

	7912-II	7900-II 16 & 20	8012-II	85-III 16-20	85-III 25	85-III 31-35	89-III DC	89-III AC	2540 2-Stage
Blower									
33580 Blower Cover				✗	✗	✗			
34014 Blower Cover BACK (OUTSIDE)							✗	✗	✗
35881 Blower Wheel STEEL	✗	✗							
33431 Blower Wheel STEEL			✗						
34099 Blower Wheel PLASTIC **USE 34550**							✗	✗	✗
34550 Blower Wheel STEEL							✗	✗	✗
33126 Blower Wheel and Clamp				✗	✗	✗			
Burner									
36043 Burner	✗	✗	✗						
32811 Burner						✗			
33842 Burner				✗	✗				
35491 Burner							✗	✗	✗
36147 Secondary Air Baffle 7920 & 7916 (after S/N 0651157)	✗								
36438 Secondary Air Baffle 7916 (before S/N 0651156)		✗							
36258 Secondary Air Baffle	✗		✗						
Burner Orifices									
31257 #56 16,000 BTU		✗		✗					
31265 1.25 MM 18,000 BTU		✗		✗					
36218 #60 12,000 BTU (before S/N 0651156) ⌘									
37389 #62 12,000 BTU (after S/N 0651155)	✗		✗						
31267 #54 25,000 BTU					✗				
31280 #52 31,000 BTU						✗			
32285 #51 35,000 BTU						✗	✗	✗	
34004 #49 40,000 BTU							✗	✗	✗
34092 #30 40,000 BTU NAT.								✗	
34093 #32 35,000 BTU NAT.								✗	
Circuit Board									
34109 Controller Module									✗
34543 Controller Module Bracket (NEED 34541)									✗
37515 Ignition Board Kit (AC)								✗	
31501 Ignition Board Retrofit Kit (with fan control)	✗	✗	✗	✗	✗	✗	✗		
34541 Ignition Bracket				✗	✗	✗	✗	✗	✗
34696 Ignition Module									✗
36119 Ign. Plate Metal ❖	✗	✗	✗						
37951 Ign. Plate Plastic	✗	✗	✗						
Circuit Breakers									
34007 Breaker RESET/OFF SWITCH	✗	✗	✗	✗				✗	
35791 Breaker 5 AMP ON/OFF SWITCH	✗	✗	✗	✗				✗	
33780 Breaker Kit 7 AMP				✗	✗				
33590 Breaker 10 AMP					✗	✗			
33781 Breaker Kit 10 AMP - POP UP					✗	✗			
33782 Breaker Kit 15 AMP - POP UP						✗	✗		
38507 Breaker 20 AMP - POP UP									✗
34015 Breaker 20 AMP - ROCKER SWITCH						✗		✗	

hydro flame **Furnace**

REPLACEMENT PART REFERENCE

JANUARY 2007

❖ NLA - No longer available ⌘ While supplies last

	7912-II	7900-II 16 & 20	8012-II	85-III 16-20	85-III 25	85-III 31-35	89-III DC	89-III AC	2540 2-Stage
Combustion									
35892 Combustion Air Hose	✗	✗	✗						
33128 Combustion Wheel Kit (PLASTIC)				✗	✗	✗	✗	✗	✗
33124 Combustion Wheel Kit	✗	✗	✗						
Door									
37912 Fastener 1/4 Turn Nylatch	✗	✗	✗						
36644 Access Grill (Screw-In) ❖									
37520 Door Assy (1/4 turn fastener)	✗	✗	✗						
37864 Access Grill (1/4 turn Arctic White)	**No Longer Available**								
37760 Receptacle - Clip on	✗	✗	✗						
31145 Roller Door Catch ❖	✗	✗	✗						
Draft Cap									
37619 Draft Cap Assy Adjustable ❖			✗	✗	✗				
38141 Draft Cap 3/8" baffle					✗	✗	**8940**	**8940**	✗
38139 Draft Cap 5/8" baffle				✗			**8935**	**8935**	
Electrodes									
37517 Electrode - single sense	✗	✗	✗						
37057 Electrode - single sense							✗	✗	✗
36998 Electrode - dual sense	✗	✗	✗						
36999 Electrode - dual sense				✗	✗	✗			
36997 Electrode - dual sense							✗	✗	
37079 Electrode Cover Plate (Single Sense)	✗	✗	✗						
36044 Electrode Cover Plate (Dual Sense) ⌘	✗	✗	✗						
Gaskets									
35890 Burner Plate Gasket (use 2)	✗	✗	✗						
32172 Electrode Gasket Dual Sense	✗	✗	✗	✗	✗	✗	✗	✗	✗
37100 Electrode Gasket Single Sense	✗	✗	✗	✗	✗	✗	✗	✗	✗
34053 Element Wall Gasket (before SN1259907)							✗	✗	✗
37956 Element Wall Gasket (after SN1259906)							✗	✗	✗
32926 Heating Element Gasket				✗	✗	✗			
32841 Motor Gasket				✗	✗	✗			
37661 Motor Gasket	✗	✗	✗						
37713 Motor Gasket							✗	✗	✗
Heating Element									
35903 Heating Element	✗	✗	✗						
37960 Heating Element Kit* 16, 20,				✗					
37961 Heating Element Kit* 25					✗				
37962 Heating Element Kit* 31, 35						✗			
34976 Heating Element							✗	✗	✗
*Kit includes draft cap & element gasket									
Manifolds									
33565 Inlet Manifold (before S/N 0654748)				✗	✗	✗			
37392 Outlet Manifold (after S/N 0654747)				✗	✗	✗			
36376 Inlet Manifold (before S/N 0657716) ❖							✗	✗	✗
37392 Outlet Manifold (after S/N 0657715)							✗	✗	✗
37391 Outlet Manifold (after S/N 0651155)	✗	✗	✗						

hydro flame **Furnace**
REPLACEMENT PART REFERENCE
JANUARY 2007

❖NLA - No longer available ⌘While supplies last

	7912-II	7900-II 16 & 20	8012-II	85-III 16-20	85-III 25	85-III 31-35	89-III DC	89-III AC	2540 2-Stage
33566 Outlet Manifold (before S/N 0654748)				✗	✗	✗			
35936 Outlet Manifold ❖	✗	✗	✗						
31043 Brass Inlet Fitting (MALE ELBOW) Use with Part #'s **37392/37391**	✗	✗	✗	✗	✗	✗	✗	✗	✗
32173 Brass Inlet Elbow (before S/N 0654748)				✗	✗	✗			
Motor									
32031 Motor AC								✗	
34039 Motor Capacitor AC								✗	
36122 Motor PF20066Q			✗						
31036 Motor PF20040Q	✗	✗							
37964 Motor PF26170Q 2 STAGE									✗
37360 Motor Bracket Kit				✗	✗	✗			
35879 Motor Bracket	✗	✗	✗						
37359 Motor Kit PF20076Q				✗					
37358 Motor Kit PF23190Q					✗				
37357 Motor Kit PF26157Q						✗	✗		
Relay									
31017 Klixon Relay	✗	✗	✗	✗	✗	✗	✗	✗	
Switches									
37021 Limit Switch L77 / 170°	✗	✗	✗				✗	✗	✗
37022 Limit Switch L190°				✗	✗	✗			
36121 ON-OFF Switch (ROCKER)	✗	✗	✗	✗	✗	✗	✗	✗	✗
36133 Sail Switch	✗	✗							
36134 Sail Switch			✗						
36680 Sail Switch				✗			✗	✗	✗
35054 Sail Switch					✗				
35050 Sail Switch						✗			
36040 Sail Switch Bracket	✗	✗	✗						
Thermostats									
38452 Thermostat (brown) Heat Only HFH-2000	✗	✗	✗	✗	✗	✗	✗	✗	
38453 Thermostat (white) Heat Only HFH 2000	✗	✗	✗	✗	✗	✗	✗	✗	
38535 Thermostat, Digital, 2 Stage 2H2C									✗
38555 Thermostat, Digital, Single Stage 1H2C	✗	✗	✗	✗	✗	✗	✗	✗	
Valve									
36035 White Rodgers 25M16-503 Side Port (before S/N 0651156) ❖	✗	✗	✗						
37383 White Rodgers Side Outlet (after S/N 0651155) 25M16V-711	✗	✗	✗						
33475 White Rodgers Coil (DC)	✗	✗	✗	✗	✗	✗	✗	✗	✗
36036 White Rodgers Valve Bracket ⌘ (Use with Part #'s 36035)	✗	✗	✗						
37390 White Rodgers Valve Bracket (Use with Part #'s 37383)	✗	✗	✗						
33337 White Rodgers (before S/N 0654748-85 series) 25M16V-701 (before S/N 0657716-89 series)			✗	✗	✗	✗			
37383 White Rodgers Side Outlet (After Serial #0654747) 25M16V-711				✗	✗	✗			

hydro flame **Furnace**
REPLACEMENT PART REFERENCE
JANUARY 2007

❖NLA - No longer available ⌘While supplies last

	7912-II	7900-II 16 & 20	8012-II	85-III 16-20	85-III 25	85-III 31-35	89-III DC	89-III AC	2540 2-Stage
33586 White Rodgers Valve Bracket (Use with Part # 33337)				✗	✗	✗	✗		
37426 White Rodgers Valve Bracket (Use with Part # 37383)				✗	✗	✗	✗		
37383 White Rodgers Valve (DC) (After S/N 0657715)						✗			
34006 White Rodgers Valve (AC) (Before S/N 0657716) 25M18V-701							✗		
37384 White Rodgers Valve (AC) (After S/N 0657715) 25M18V-711							✗		
34515 White Rodgers Coil (AC)								✗	
37973 2-Stage Gas Valve W/R 25M05V-701									✗
Vent Kit									
35955 79A-II 4 inch	✗	✗	✗						
35956 79B-II 8 inch	✗	✗	✗						
35957 79C-II 12 inch	✗	✗	✗						
Wires									
37987 Field Plug Assembly									✗
36290 Field Plug Assembly				✗	✗	✗			
34116 High Tension Lead	✗	✗	✗						
35193 High Tension Lead (before S/N 0654748)				✗	✗	✗			
37419 High Tension Lead (after S/N 0654747)				✗	✗	✗			
35193 High Tension Lead (before S/N 0657716)							✗	✗	
37419 High Tension Lead (after S/N 0657715))							✗	✗	✗
36180 Wiring Harness Complete (internal)				✗	✗	✗			
36875 Wiring Harness Complete DC							✗		
37443 Wiring Harness Complete AC								✗	
Miscellaneous									
35121 24 VAC Transformer								✗	
36412 Casing Assembly	✗	✗							
35912 Control Box	✗	✗	✗						
37431 Control Box							✗	✗	✗
36959 Directional Air Box Insert	✗	✗	✗						
31474 Duct Adapter 4”	✗	✗	✗	✗	✗	✗	✗	✗	✗
36688 Duct Adapter 2”	✗	✗	✗	✗	✗	✗	✗	✗	✗
31361 Duct Cover Plate	✗	✗	✗	✗	✗	✗	✗	✗	✗
33567 Gas Inlet Plug (Before S/N 0654748)				✗	✗	✗			
37410 Gas Inlet Plug (After S/N 0654747)				✗	✗	✗			
33567 Gas Inlet Plug (Before S/N 0657716)							✗	✗	✗
37410 Gas Inlet Plug (After S/N 0657715)							✗	✗	✗
33729 Slide Plate (Before S/N 0654748)				✗	✗	✗			
37411 Slide Plate (After S/N 0654747)				✗	✗	✗			
33729 Slide Plate (Before S/N 0657716)							✗	✗	
37442 Slide Plate (After S/N 0657715)							✗	✗	✗

hydro flame **Furnace**
REPLACEMENT PART REFERENCE
JANUARY 2007

❖NLA - No longer available ⌘While supplies last

	85-II 16-20	85-II 25	85-II 31-35	89-I DC	89-I AC	89-II DC	89-II AC	FA 79D	FA79P	HF 80D	HF 80P
Blower											
33580 Blower Cover	✗	✗	✗								
33431 Blower Wheel								✗	✗	✗	✗
33618 Blower Wheel		✗	✗								
33619 Blower Wheel ❖	✗										
34550 Blower Wheel STEEL				✗	✗	✗	✗				
Burner											
32149 Burner ❖											
32811 Burner			✗								
33842 Burner	✗	✗									
38548 Burner				✗	✗						
35491 Burner						✗	✗				
Burner Orifice											
31268 #59 12,000 BTU ❖								✗	✗	✗	✗
31257 #56 16,000 BTU	✗							✗	✗		
31265 1.25 MM 20,000 BTU								✗	✗		
31267 #54 25,000 BTU		✗									
31280 #52 31 & 32,000 BTU			✗								
32285 #51 35,000 BTU			✗	✗	✗	✗	✗				
34004 #49 40,000 BTU				✗	✗	✗	✗				
34093 #32 35,000 BTU NAT				✗	✗	✗	✗				
34092 #30 40,000 BTU NAT				✗	✗	✗	✗				
Circuit Board											
34541 Ignition Board Bracket	✗	✗	✗	✗	✗	✗	✗				
37515 Ignition Board Kit (AC)					✗		✗				
31501 Ignition Board Kit (DC)	✗	✗	✗	✗		✗		✗		✗	
Circuit Breaker											
31028 Breaker 5 AMP	✗				✗		✗	✗	✗	✗	✗
33780 Breaker 7 AMP KIT		✗									
33590 Breaker 10 AMP			✗								
33784 Breaker 15 AMP KIT				✗		✗					
Combustion											
31881 Combustion Air Hose ❖								✗	✗	✗	✗
33124 Combustion Wheel Kit								✗	✗	✗	✗
33128 Combustion Wheel Kit	✗	✗	✗	✗	✗	✗	✗				
Door											
33753 Deluxe Door 01 White	✗	✗	✗	✗	✗	✗	✗				
33754 Deluxe Door 02 Colonial White	✗	✗	✗	✗	✗	✗	✗				
33756 Deluxe Door 04 White	✗	✗	✗	✗	✗	✗	✗				
33763 Deluxe Door 11 White	✗	✗	✗	✗	✗	✗	✗				
35001 Deluxe Door 18 Gray	✗	✗	✗	✗	✗	✗	✗				
35057 Deluxe Door 20 Gray	✗	✗	✗	✗	✗	✗	✗				
35101 Deluxe Door 22 White	✗	✗	✗	✗	✗	✗	✗				
35102 Deluxe Door 23 White	✗	✗	✗	✗	✗	✗	✗				

hydro flame **Furnace**
REPLACEMENT PART REFERENCE
JANUARY 2007

❖NLA - No longer available ⌘While supplies last

	85-II 16-20	85-II 25	85-II 31-35	89-I DC	89-I AC	89-II DC	89-II AC	FA 79D	FA79P	HF 80D	HF 80P
33853 Recess Pan 01 White	✗	✗	✗	✗	✗	✗	✗				
33854 Recess Pan 02 Colonial White	✗	✗	✗	✗	✗	✗	✗				
33856 Recess Pan 04 White	✗	✗	✗	✗	✗	✗	✗				
33863 Recess Pan 11 White	✗	✗	✗	✗	✗	✗	✗				
35063 Recess Pan 12 Grey	✗	✗	✗	✗	✗	✗	✗				
35104 Recess Pan 22 White	✗	✗	✗	✗	✗	✗	✗				
35105 Recess Pan 23 White	✗	✗	✗	✗	✗	✗	✗				
33847 Door Catch Screw Type (set)	✗	✗	✗	✗	✗	✗	✗				
33620 Door Hinge - inner (ORDER 2 PER DOOR)	✗	✗	✗	✗	✗	✗	✗				
31145 Roller Door Catch ❖								✗	✗	✗	✗
Draft Cap											
37890 Draft Cap Assembly -				✗	✗	✗	✗				
37619 Draft Cap Assembly ❖	✗	✗	✗								
Electrodes											
33234 Electrode								✗		✗	
36999 Electrode	✗	✗	✗								
38548 Electrode				✗	✗						
36997 Electrode						✗	✗				
36998 Electrode								✗		✗	
Exhaust Tube Extensions											
31680 79/80A (0˝ - 3-1/2˝) **NLA**								✗	✗	✗	✗
Gaskets											
34551 Bottom Discharge Gasket				✗	✗	✗	✗				
34553 Bottom Discharge Gasket	✗	✗	✗								
31842 Burner Plate Gasket									✗		✗
31843 Burner Plate Gasket								✗		✗	
33485 Combustion Gasket Set								✗	✗	✗	✗
32172 Electrode Gasket	✗	✗	✗	✗	✗	✗	✗	✗		✗	
32926 Exhaust Wall Gasket	✗	✗	✗								
34053 Exhaust Wall Gasket				✗	✗	✗	✗				
32841 Motor Gasket	✗	✗	✗	✗	✗	✗	✗				
Heating Elements											
34976 Heating Element				✗	✗	✗	✗				
37960 Heating Element Kit*	✗										
37961 Heating Element Kit*		✗									
37962 Heating Element Kit*			✗								
*Kit includes draft cap & element gasket											
Motor											
34039 Motor Capacitor AC					✗		✗				
32031 Motor 7162-2839E AC					✗		✗				
31035 Motor PF2041Q										✗	✗
31036 Motor PF2040Q								✗	✗		
32774 Motor PF23175Q		✗									
33219 Motor PF20068Q	✗										
33589 Motor PF23144Q			✗								
37360 Motor Bracket KIT	✗	✗	✗								
37357 Motor Kit				✗		✗					

hydro flame **Furnace**
REPLACEMENT PART REFERENCE
JANUARY 2007

❖ NLA - No longer available ⌘ While supplies last

	85-II 16-20	85-II 25	85-II 31-35	89-I DC	89-I AC	89-II DC	89-II AC	FA 79D	FA79P	HF 80D	HF 80P
Pilot											
32466 1/4 x 7 Pilot Tube w/ fittings									✗		✗
33830 Jade Orifice .008									✗		✗
31307 Jade Thermal Couple 14˝									✗		✗
31299 Jade Pilot Assembly J721013CLP									✗		✗
36038 Piezo Igniter Kit								✗	✗	✗	✗
Relay											
31017 Klixon Relay	✗	✗	✗	✗	✗	✗	✗	✗	✗	✗	✗
Switches											
31023 Limit Switch L170								✗	✗	✗	✗
35132 Limit 130 Switch	✗	✗	✗	✗	✗						
37021 Limit Switch L77-C						✗	✗				
35047 Sail Switch ❖								✗	✗	✗	✗
35050 Sail Switch			✗								
36680 Sail Switch	✗			✗	✗	✗	✗				
35054 Sail Switch		✗									
36205 Thermal Cut-Off 8900-II						✗	✗				
Thermostat											
38452 Thermostat (brown) heat only	✗	✗	✗	✗	✗	✗	✗	✗	✗	✗	✗
38453 Thermostat (white) heat only	✗	✗	✗	✗	✗	✗	✗	✗	✗	✗	✗
Valve											
33716 ITT Valve Retrofit Kit (pilot)									✗		✗
33796 ITT/FEN Valve Retrofit Kit (Electronic Ignition)								✗		✗	
32697 Robertshaw Valve 7000 ERLC-LP									✗		✗
33337 White Rodgers Valve 25M16-701 (DC)	✗	✗	✗	✗		✗		✗		✗	
33475 White Rodgers Coil (DC)	✗	✗	✗	✗		✗		✗		✗	
34006 White Rodgers Valve 25M18-701 (AC)					✗		✗				
34515 White Rodgers Coil (AC)					✗		✗				
Wires											
31090 High Tension Lead ❖											
33661 High Tension Lead ❖											
35193 High Tension Lead				✗	✗	✗	✗				
35235 Wiring Harness Blower AC ❖					✗						
Miscellaneous											
35121 24 VAC Transformer					✗		✗				
31361 Duct Cover Plate	✗	✗	✗	✗	✗	✗	✗	✗	✗	✗	✗
31474 Duct Adapter	✗	✗	✗	✗	✗	✗	✗	✗	✗	✗	✗
33567 Gas Inlet Plug	✗	✗	✗	✗	✗	✗	✗				
33729 Slide Plate	✗	✗	✗	✗	✗	✗	✗				

hydro flame **Furnace**

REPLACEMENT PART REFERENCE

JANUARY 2007

❖ NLA - No longer available ⌘ While supplies last

	85-1 16-20	85-1 25	85-1 31-35	DC82 25-32	DC82 35-41	AC 82	FA 76D	FA 78 25-32	FA 72D	FA 72P
Blower										
31135 Blower Wheel ❖									✗	✗
31139 Blower Wheel				✗	✗	✗		✗		
32775 Blower Wheel ❖		✗	✗							
32776 Blower Wheel	✗									
Burner										
32002 Burner ❖					✗	✗				
32112 Burner ⌘				✗				✗		
32811 Burner	✗	✗	✗							
Burner Orifice										
31270 #66 Orifice									✗	✗
31268 #59 Orifice ❖							✗			
31257 #56 16,000 BTU	✗									
31265 1.25mm 18,000 BTU	✗									
31267 #54 25,000 BTU		✗		✗				✗		
31280 #52 31 &32,000 BTU			✗	✗				✗		
32285 #51 35,000 BTU			✗		✗	✗			✗	
31256 #50 41,000 BTU					✗	✗				
32284 #40 35,000 BTU NAT						✗				
32238 #36 41,000 BTU NAT ⌘						✗				
Circuit Breaker										
31028 Breaker 5 AMP	✗					✗	✗		✗	✗
33780 Breaker 7 AMP		✗								
33590 Breaker 10 AMP			✗	✗	✗					
Circuit Board										
31501 Ignition Board Kit (DC)	✗	✗	✗	✗	✗		✗	✗	✗	
37515 Ignition Board Kit (AC)						✗				
Combustion										
33124 Combustion Wheel Kit	✗	✗					✗			
31138 Combustion Wheel ❖					✗	✗				
37107 Combustion Wheel ❖			✗							
Electrodes										
33234 Electrode							✗			
33235 Electrode				✗	✗	✗		✗		
33625 Electrode Kit	✗	✗	✗							
36999 Electrode Only	✗	✗	✗							
Gaskets										
34551 Bottom Discharge Gasket				✗	✗	✗		✗		
34553 Bottom Discharge Gasket	✗	✗	✗							
31838 Burner Plate Gasket									✗	✗
32762 Burner Plate Gasket				✗	✗	✗		✗		
33485 Combustion Gasket Set							✗			
32172 Electronic Ignition Electrode Gasket	✗	✗	✗	✗	✗	✗	✗	✗	✗	
32926 Element Gasket	✗	✗	✗							
31841 Manifold Gasket				✗	✗	✗		✗		
32841 Motor Gasket	✗	✗	✗							
Heating Elements										
32118 Heating Element Assembly				✗				✗		
32119 Heating Element Assembly					✗	✗				

hydro flame **Furnace**
REPLACEMENT PART REFERENCE
JANUARY 2007

❖NLA - No longer available ⌘While supplies last

	85-1 16-20	85-I 25	85-I 31-35	DC82 25-32	DC82 35-41	AC 82	FA 76D	FA 78 25-32	FA 72D	FA 72P
Motor										
31039 Motor JA25065N (AC)						✗				
31036 Motor PF2040Q							✗			
31037 Motor PE2423Q									✗	✗
31038 Motor PE2627Q								✗		
32330 Motor PF23129Q				✗	✗					
32774 Motor PF23175Q		✗	✗							
33219 Motor PF2055Q	✗									
37360 Motor Bracket	✗	✗	✗							
Pilot										
31292 ITT Pilot Assembly 26C1762 ⌘										✗
33829 ITT TV Orifice .010 ❖				✗	✗			✗		
32417 ITT TV Orifice .008										✗
31299 Jade Pilot Assembly J72C2426CL				✗	✗			✗		
32416 Jade Orifice .010 ❖				✗	✗			✗		
31307 Jade Thermocouple 14˝										✗
32480 Jade Thermocouple 18˝				✗	✗			✗		
Relay										
31017 Klixon Relay	✗	✗	✗	✗	✗	✗	✗	✗		
Switch										
31023 Limit 170 Switch							✗		✗	✗
31025 Limit 190 Switch w/plate				✗	✗	✗		✗		
32927 Limit 190 Switch	✗	✗	✗							
35282 Sail Switch	✗	✗	✗							
33697 Sail Switch ❖				✗	✗	✗		✗		
Thermostat										
38452 Thermostat (brown) heat only	✗	✗	✗	✗	✗	✗	✗	✗	✗	✗
38453 Thermostat (white) heat only	✗	✗	✗	✗	✗	✗	✗	✗	✗	✗
Valves										
33717 ITT Valve Retrofit Kit (pilot) ❖										✗
33688 ITT/FEN Valve Retrofit Kit (DSI)				✗	✗		✗	✗		
33797 ITT/FEN Valve Retrofit Kit (DSI)							✗			
33806 ITT/FEN Valve Retrofit Kit (DSI)									✗	
36728 Johnson Valve Retrofit Kit (DSI) (AC)						✗				
33475 White Rodgers Coil	✗	✗	✗	✗	✗		✗			
33337 White Rodgers Valve 25M16-701	✗	✗	✗	✗						
Wire										
32139 Field Hookup				✗	✗			✗		
32140 Field Hookup						✗				
Miscellaneous										
32475 12 VDC Converter						✗			✗	✗
33784 24 VAC Transformer						✗				
31831 Door Interior ❖				✗	✗	✗				
33774 Door Catch Assemblies ❖										
31474 Duct Adapter	✗	✗	✗	✗	✗	✗		✗		
31361 Duct Cover Plate	✗	✗	✗	✗	✗	✗	✗	✗		
32137 Exhaust Tube Ext. 82F ❖				✗	✗	✗		✗		
32133 Vent Shell (only) 82BE ❖				✗	✗	✗		✗		
32134 Vent Shell (only) 82AD ❖				✗	✗	✗		✗		

Atwood Furnace Installation Parts

Series 85 and 2-Stage Furnaces

Part #	Appearance	Description
34438	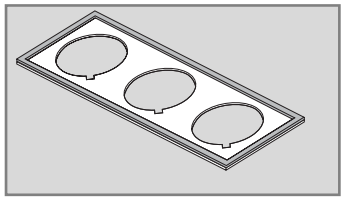	Floor plate and (3) adapters for 4" ducts to rear of furnace.
36278	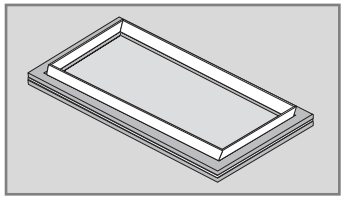	Adapter plate for bottom discharge - with foam seals on both sides.
36277	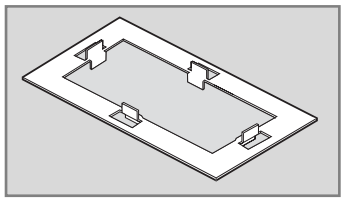	Adapter plate for bottom discharge - no seals but with alignment tabs. Use with gasket 34551.
37745	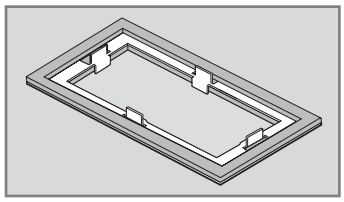	Adapter plate for bottom discharge - same as 36277 except includes foam seals on both sides.
37878	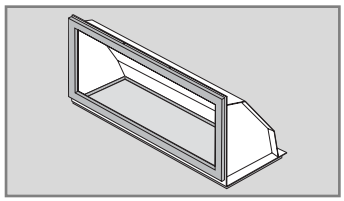	Extension plenum, rear discharge to floor duct with two seals.
33150	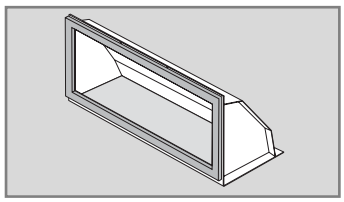	Extension plenum, rear discharge to floor duct with one seal.
37868	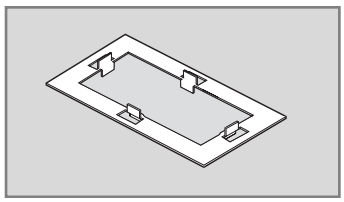	Adapter plate for bottom discharge - from extension plenum. No seals but with alignment tabs. Use with extension plenum 33150 or 37878.

Atwood Furnace Installation Parts

Series 89 and 2-Stage Furnaces

Part #	Appearance	Description
36897	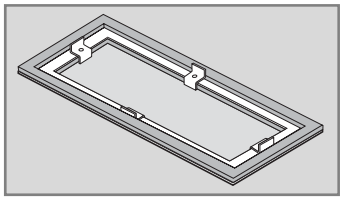	Adapter plate for bottom discharge - has alignment tabs and foam seals on both sides.

Series 79 and 80 Furnaces

Part #	Appearance	Description
37452	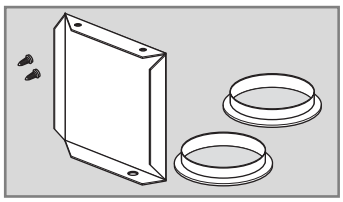	Field Kit, side discharge

All Atwood Furnaces

Part #	Appearance	Description
31474	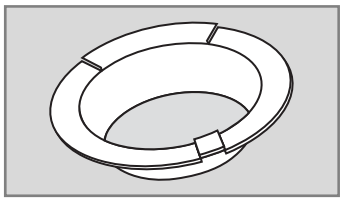	Duct adapter - 4"
36688	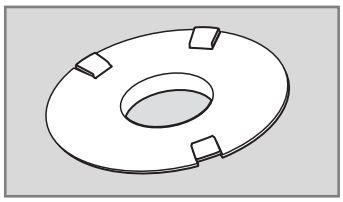	Duct adapter - 2"
31361	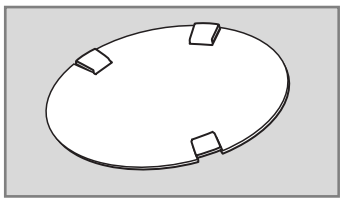	Cover plate - 4"
34553	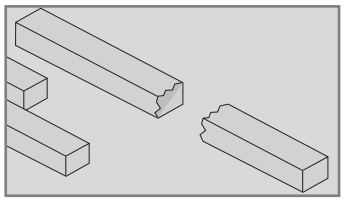	Foam tape seal 29" x 1/2"
34689		Foam tape seal 32" x 1/2" (used with 36277)
		Foam tape seal 42" x 1/2"

© 2002 Atwood Mobile Products January, 2002 TS 00024