Over the Range Microwave Oven

BEFORE YOU BEGIN

Read these instructions completely and carefully.

IMPORTANT Save these instructions for local inspector s use.

IMPORTANT Observe all governing codes and ordinances.

Note to Installer Be sure to leave these instructions with the Consumer.

Note to Consumer Keep these instructions for future reference.

Skill level Installation of this appliance requires basic mechanical and electrical skills.

Proper installation is the responsibility of the installer.

Product failure due to improper installation is not covered under the Warranty.

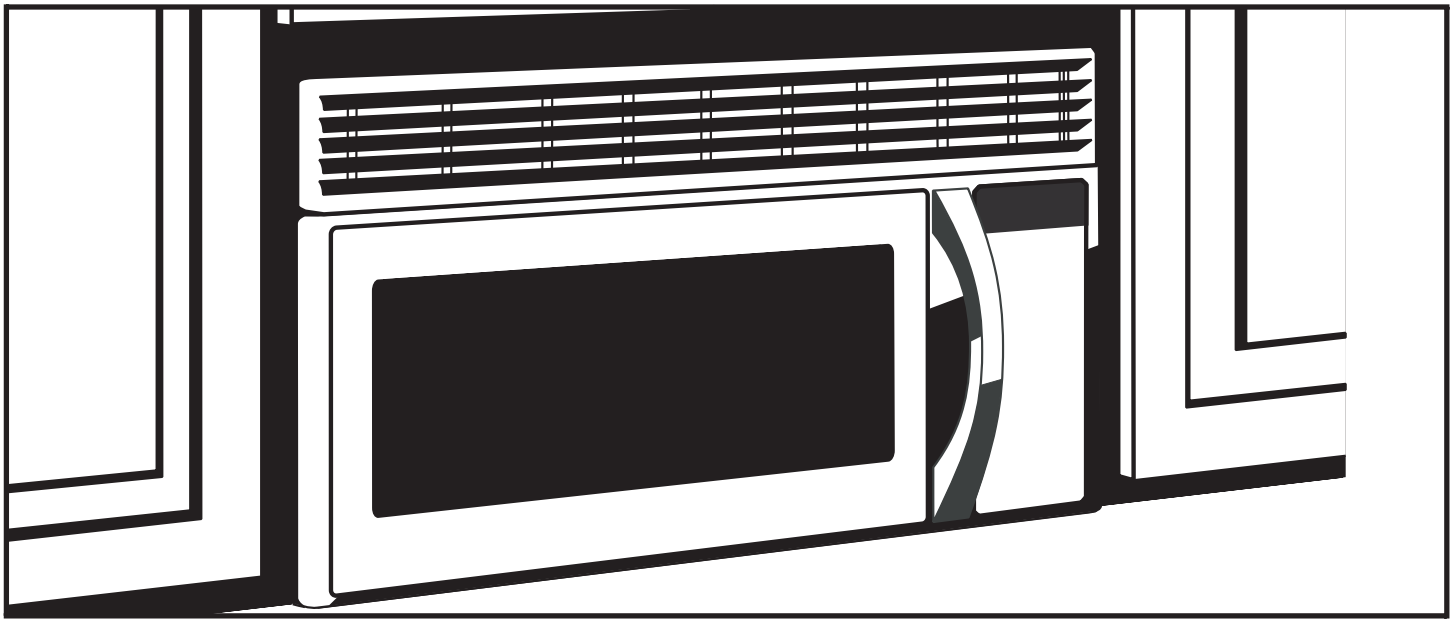

READ CAREFULLY. KEEP THESE INSTRUCTIONS.

CONTENTS

General information

Important Safety Instructions 3
Electrical Requirements 3
Hood Exhaust 4, 5
Damage ?Shipment/Installation 6
Parts Included..... 6
Tools You Will Need..... 7
Mounting Space..... 7

Step-by-step installation guide

Placement of Mounting Plate 8-10
Removing the Mounting Plate 8
Finding the Wall Studs 8
Determining Wall Plate Location 9
Aligning the Wall Plate 10

Installation Types 11-12
A Outside Top Exhaust 12-15
Attach Mounting Plate to Wall 12
Preparation of Top Cabinet 13
Checking for Proper Damper Operation... 14
Mount the Microwave Oven..... 14
Adjust the Exhaust Adaptor..... 15
Connecting Ductwork 15

B Outside Back Exhaust..... 16-19
Preparing Rear Wall for Outside Back Exhaust. 16
Attach Mounting Plate to Wall 17
Preparation of Top Cabinet 17
Adapting Microwave Blower for Outside Back Exhaust..... .... 17, 18
Mount the Microwave Oven..... 19

C Recirculating 20-22
Attach Mounting Plate to Wall 20
Preparation of Top Cabinet 20
Mount the Microwave Oven..... .... 21, 22
Installing the Charcoal Filter..... 22
Before You Use Your Microwave ..... .23

IMPORTANT SAFETY INSTRUCTIONS

This product requires a three-prong grounded outlet. The installer must perform a ground continuity check on the power outlet box before beginning the installation to insure that the outlet box is properly grounded. If not properly grounded, or if the outlet box does not meet electrical requirements noted (under ELECTRICAL REQUIREMENTS), a qualified electrician should be employed to correct any deficiencies.

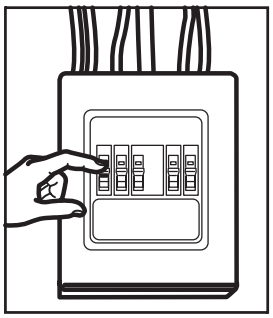

CAUTION: **For personal safety**, **remove house fuse or open circuit breaker before beginning installation to avoid severe or fatal shock injury**.

CAUTION: **For personal safety**, **the mounting surface must be capable of supporting the cabinet load**, **in addition to the added weight of this 54 pound product**, **plus additional oven loads of up to 50 pounds or a total weight of 104 pounds**.

CAUTION: **For personal safety**, **this product cannot be installed in cabinet arrangements such as an island or a peninsula**. **It must be mounted to BOTH a top cabinet AND a wall**.

NOTE: **For easier installation and personal safety**, **it is recommended that two people install this product**.

IMPORTANT PLEASE READ CAREFULLY. **FOR PERSONAL SAFETY**, **THIS APPLIANCE MUST BE PROPERLY GROUNDED TO AVOID SEVERE OR FATAL SHOCK**.

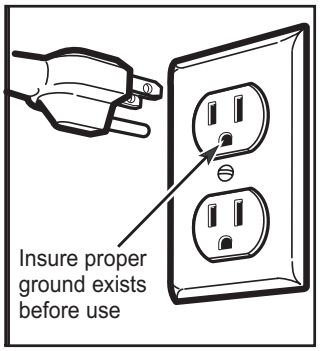

The power cord of this appliance is equipped with a three-prong (grounding) plug which mates with a standard three-prong (grounding) wall receptacle to minimize the possibility of electric shock hazard from this appliance.

You should have the wall receptacle and circuit checked by a qualified electrician to make sure the receptacle is properly grounded.

Where a standard two-prong wall receptacle is encountered, **it is very important to have it replaced with a properly grounded three-prong wall receptacle**, **installed by a qualified electrician**.

DO NOT, **UNDER ANY CIRCUMSTANCES**, **CUT**, **DEFORM OR REMOVE ANY OF THE PRONGS FROM THE POWER CORD**. **DO NOT USE WITH AN EXTENSION CORD**.

ELECTRICAL REQUIREMENTS

Product rating is 120 volts AC, 60 Hertz, 15 amps and 1.58 kilowatts. This product must be connected to a supply circuit of the proper voltage and frequency. Wire size must conform to the requirements of the National Electrical Code or the prevailing local code for this kilowatt rating. The power supply cord and plug should be brought to a separate 20 ampere branch circuit single grounded outlet. The outlet box should be located in the cabinet above the microwave oven. The outlet box and supply circuit should be installed by a qualified electrician and conform to the National Electrical Code or the prevailing local code.

HOOD EXHAUST

NOTE: **Read these next two pages only if you plan to vent your exhaust to the outside**. **If you plan to recirculate the air back into the room**, **proceed to page 6**.

OUTSIDE TOP EXHAUST (EXAMPLE ONLY)

The following chart describes an example of one possible ductwork installation.

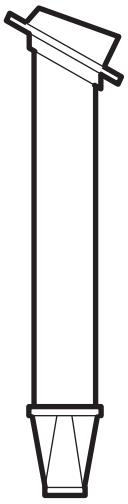

DUCT PIECES		EQUIVALENT LENGTH	x	NUMBER USED	=	EQUIVALENT LENGTH
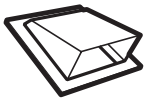	Roof Cap	24 Ft.	x	(1)	=	24 Ft.
	12 Ft. Straight Duct (6" Round)	12 Ft.	x	(1)	=	12 Ft.
	Rectangular-to-Round Transition Adaptor*	5 Ft.	x	(1)	=	5 Ft.
Equivalent lengths of duct pieces are based on actual tests and reflect requirements for good venting performance with any vent hood.				**Total Length**	=	**41 Ft**.

* **IMPORTANT**: If a rectangular-to-round transition adaptor is used, the bottom corners of the damper will have to be cut to fit, using the tin snips, in order to allow free movement of the damper.

OUTSIDE BACK EXHAUST (EXAMPLE ONLY)

The following chart describes an example of one possible ductwork installation.

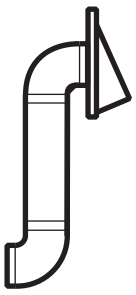

DUCT PIECES		EQUIVALENT LENGTH*	x	NUMBER USED	=	EQUIVALENT LENGTH
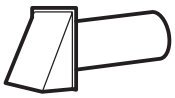	Roof Cap	40 Ft.	x	(1)	=	40 Ft.
	3 Ft. Straight Duct (3 1/4" x 10" Rectangular)	3 Ft.	x	(1)	=	3 Ft.
	90° Elbow	10 Ft.	x	(2)	=	20 Ft.
Equivalent lengths of duct pieces are based on actual tests and reflect requirements for good venting performance with any vent hood.				**Total Length**	=	**63 Ft**.

NOTE: For back exhaust, care should be taken to align exhaust with space between studs, or wall should be prepared at the time it is constructed by leaving enough space between the wall studs to accommodate exhaust.

NOTE: If you need to install ducts, note that the total duct length of 3 " x 10" rectangular or 6" diameter round duct **should not exceed 140 equivalent feet**.

Outside ventilation requires a HOOD EXHAUST DUCT. Read the following carefully.

NOTE: It is important that venting be installed using the most direct route and with as few elbows as possible. This ensures clear venting of exhaust and helps prevent blockages. **Also**, **make sure dampers swing freely and nothing is blocking the ducts**.

Exhaust connection:

The hood exhaust has been designed to mate with a standard 3 " x 10" rectangular duct.

If a round duct is required, a rectangular-to-round transition adaptor must be used. **Do not use less than a 6" diameter duct**.

Maximum duct length:

For satisfactory air movement, the total duct length of 3? x 1 0" rectangular or 6" diameter round duct should not exceed 140 equivalent feet.

Elbows, **transitions**, **wall and roof caps**, **etc.**, present additional resistance to airflow and are equivalent to a section of straight duct which is longer than their actual physical size. When calculating the total duct length, add the equivalent lengths of all transitions and adaptors plus the length of all straight duct sections. The chart below shows you how to calculate total equivalent ductwork length using the approximate feet of equivalent length of some typical ducts.

DUCT PIECES		EQUIVALENT LENGTH	x	NUMBER USED	=	EQUIVALENT LENGTH
	Rectangular-to-Round Transition Adaptor*	5 Ft.	x	( )	=	Ft.
	Wall Cap	40 Ft.	x	( )	=	Ft.
	90° Elbow	10 Ft.	x	( )	=	Ft.
	45° Elbow	5 Ft.	x	( )	=	Ft.
	90° Elbow	25 Ft.	x	( )	=	Ft.
	45° Elbow	5 Ft.	x	( )	=	Ft.
	Roof Cap	24 Ft.	x	( )	=	Ft.
	Straight Duct 6" Round or 3¼" x 10" Rectangular	1 Ft.	x	( )	=	Ft.
				Total Ductwork	=	**Ft.**

* **IMPORTANT**: If a rectangular-to-round transition adaptor is used, the bottom corners of the damper will have to be cut to fit, using the tin snips, in order to allow free movement of the damper.

Equivalent lengths of duct pieces are based on actual tests and reflect requirements for good venting performance with any vent hood.

DAMAGE SHIPMENT/ INSTALLATION

If the unit is damaged in shipment, return the unit to the store in which it was bought for repair or replacement.

If the unit is damaged by the customer, repair or replacement is the responsibility of the customer.

If the unit is damaged by the installer (if other than the customer), repair or replacement must be made by arrangement between customer and installer.

PARTS INCLUDED

PART		QUANTITY
	Wire-Mounting	2
	Mounting-Plate	1
	shelf	1
	exhaust adaptor	1

PARTS INCLUDED

HARDWARE PACKET

PART		QUANTITY
	Wood Screws (1/4" x 2")	2
	Toggle Bolts (and wing nuts) (3/16" x 3")	3
	Self-aligning Machine Screws (1/4"-28 x 3 1/4")	3
	Nylon Grommet (for metal cabinets)	1

You will find the installation hardware contained in a packet with the unit. Check to make sure you have all these parts.

NOTE: Some extra parts are included.

ADDITIONAL PARTS

PART		QUANTITY
TOP CABINET TEMPLATE	Top Cabinet Template	1
REAR WALL TEMPLATE	Rear Wall Template	1
Installation Instructions	Installation Instructions	1
	Separately Packed Grease Filters	2
	Charcoal Filter	1

TOOLS YOU WILL NEED

1 and #2 Phillips screwdriver

Pencil

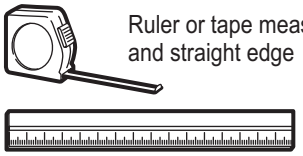
Ruler or tape measure and straight edge

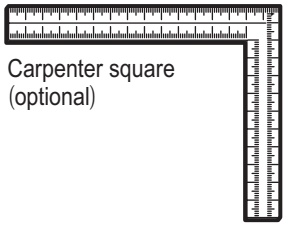
Carpenter square (optional)

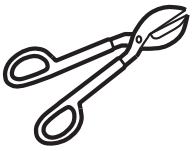
Tin snips (for cutting damper, if required)

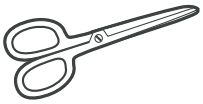
Scissors (to cut template, if necessary)

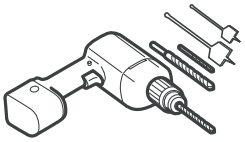
Electric drill with 3/16", and 5/8" drill bits

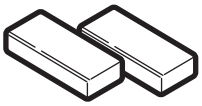
Filler blocks or scrap wood pieces, if needed for top cabinet spacing (used on recessed bottom cabinet installations only)

Gloves

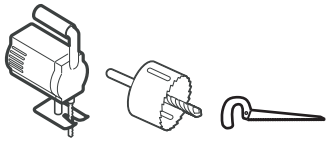
Saw (saber, hole or keyhole)

Stud finder or Hammer (optional)

Safety goggles

Level

Duct and masking tape

MOUNTING SPACE

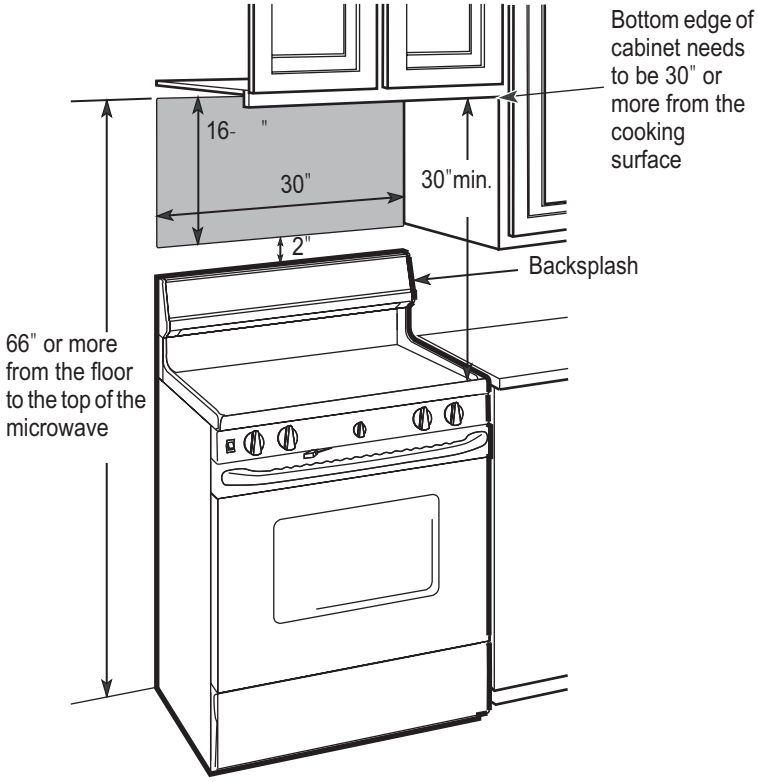

NOTES:

The space between the cabinets must be 30" wide and free of obstructions.

If the space between the cabinets is greater than 30", a Filler Panel Kit may be used to fill in the gap between the microwave oven and the cabinets. Your Owner s Manual contains the kit number for your model.

This microwave oven is for installation over ranges up to 36" wide.

If you are going to vent your microwave oven to the outside, see Hood Exhaust Section for exhaust duct preparation.

When installing the microwave oven beneath smooth, **flat cabinets**, **be careful to follow the instructions on the top cabinet template for power cord clearance**.

1. PLACEMENT OF THE MOUNTING PLATE

A. REMOVING THE MICROWAVE OVEN FROM THE CARTON/ ASSEMBLE THE MOUNTING PLATE

1. Remove the installation instructions, filters, glass tray and the small hardware bag. Do not remove the Styrofoam protecting the front of the oven.
2. Fold back all 4 carton flaps fully against carton sides. Then carefully roll the oven and carton over onto the top side. The oven should be resting in the Styrofoam.

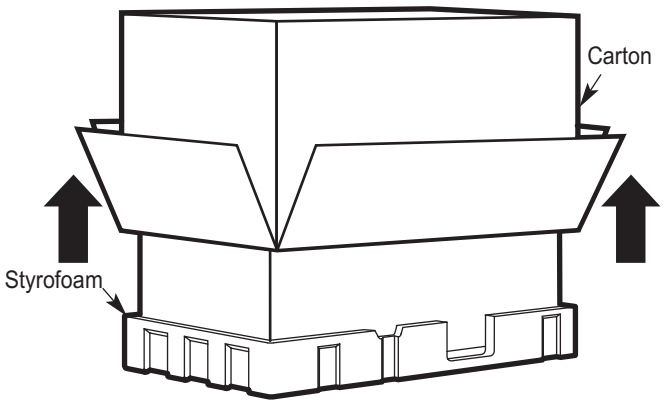

3. Pull the carton up and off the oven.
4. Remove and properly discard plastic bags.
5. you will be able to assemble it take following picture.

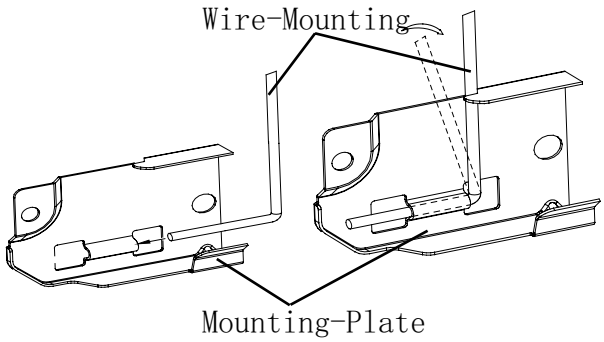

B. FINDING THE WALL STUDS

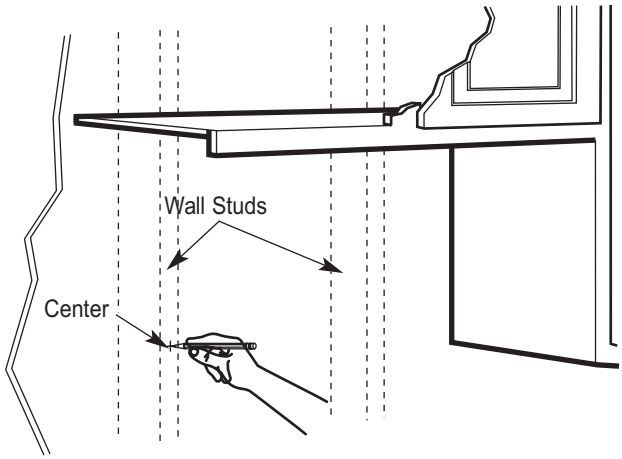

1. Find the studs, using one of the following methods:
   A. Stud finder a magnetic device which locates nails.

   OR

   B. Use a hammer to tap lightly across the mounting surface to find a solid sound. This will indicate a stud location.
2. After locating the stud(s), find the center by probing the wall with a small nail to find the edges of the stud. Then place a mark halfway between the edges. The center of any adjacent studs should be 16" or 24" from this mark.
3. Draw a line down the center of the studs.

THE MICROWAVE MUST BE CONNECTED TO AT LEAST ONE WALL STUD.

C. DETERMINING WALL PLATE LOCATION UNDER YOUR CABINET

Plate position ? beneath flat bottom cabinet

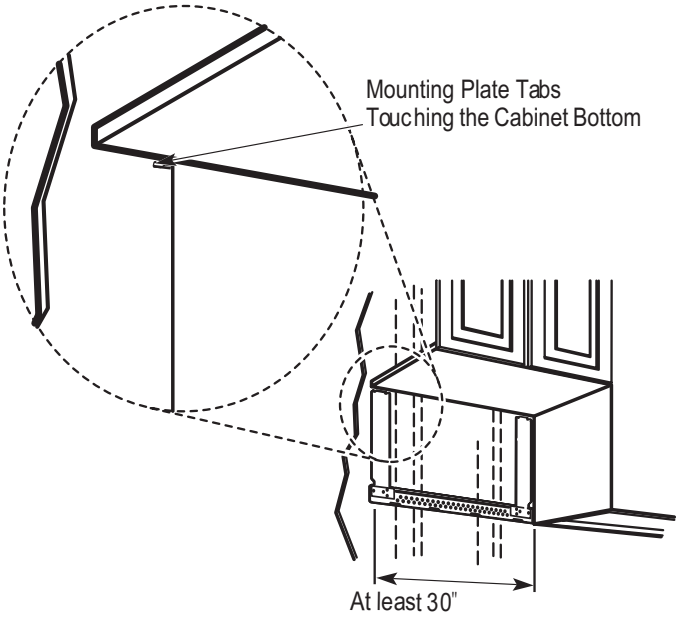

Plate position beneath framed recessed cabinet bottom

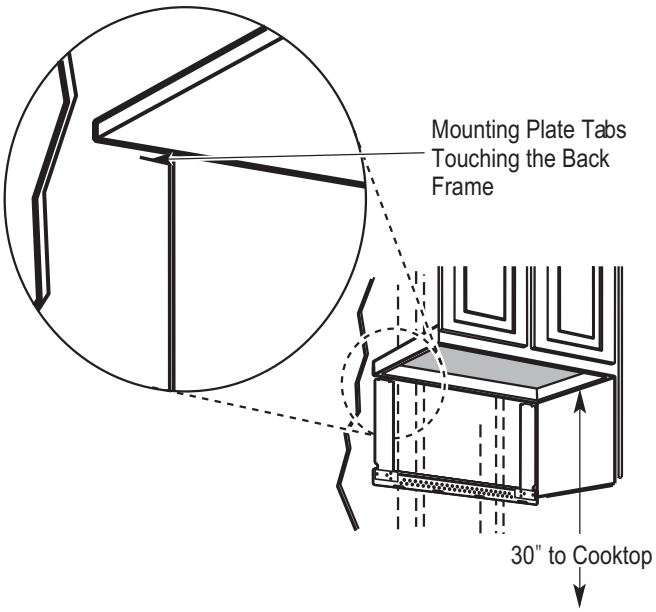

Plate position ? beneath recessed bottom cabinet with front overhang

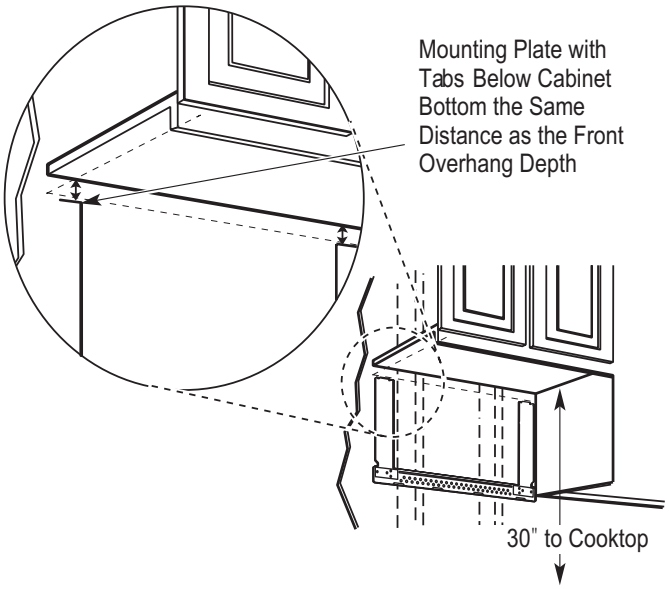

Your cabinets may have decorative trim that interferes with the microwave installation. Remove the decorative trim to install the microwave properly and to make it level.

THE MICROWAVE MUST BE LEVEL.

Use a level to make sure the cabinet bottom is level.

If the cabinets have a front overhang only, with no back or side frame, install the mounting plate down the same distance as the front overhang depth. This will keep the microwave level.

1. Measure the inside depth of the front overhang.
2. Draw a horizontal line on the back wall an equal distance below the cabinet bottom as the inside depth of the front overhang.
3. For this type of installation with front overhang only, align the mounting tabs with this horizontal line, not touching the cabinet bottom as described in Step D.

D. ALIGNING THE WALL PLATE

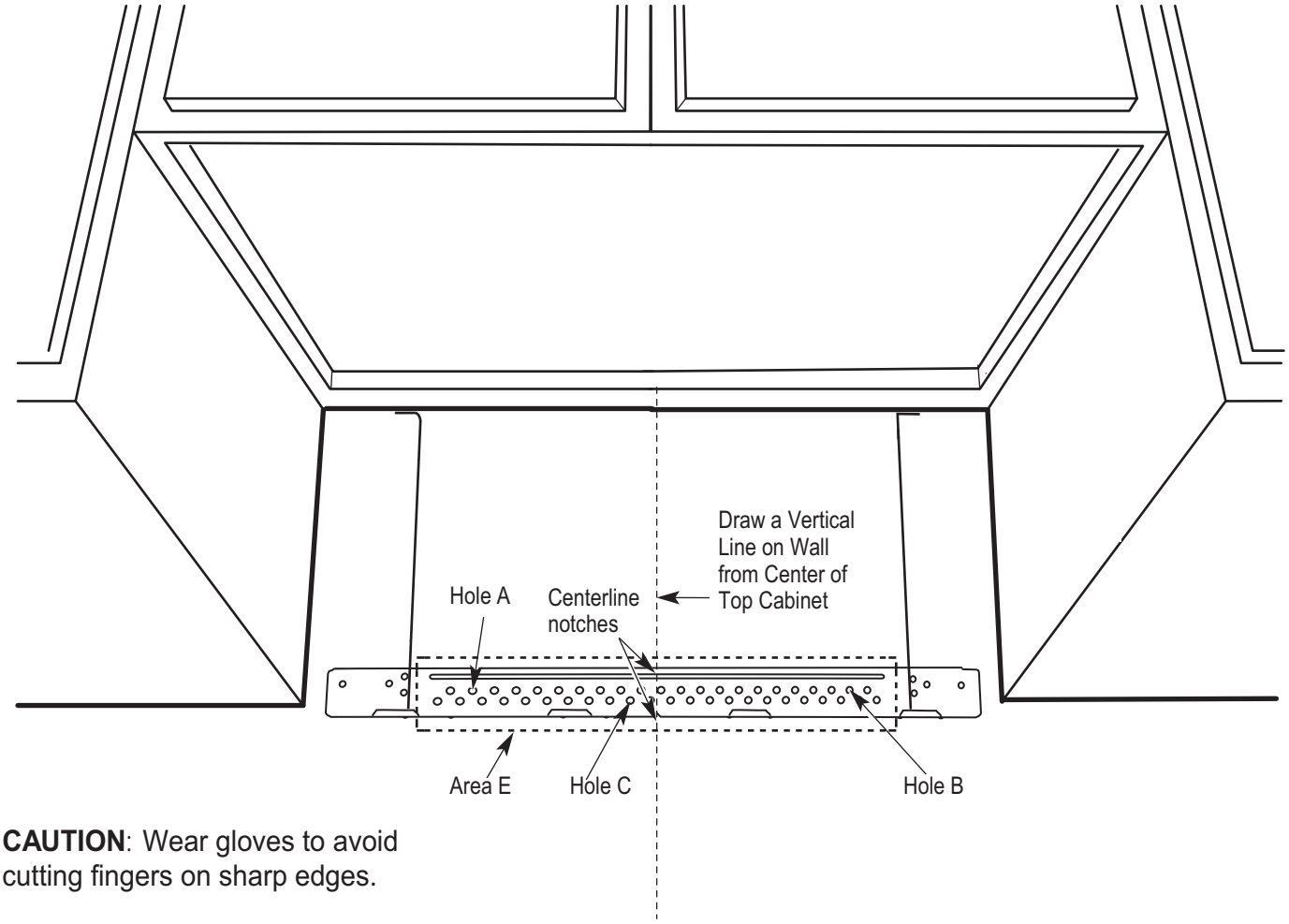

CAUTION: Wear gloves to avoid cutting fingers on sharp edges.

1. Draw a vertical line on the wall at the center of the 30" wide space.
2. Use the mounting plate **as the template** for the rear wall. Place the mounting plate on the wall, making sure that the tabs are **touching the bottom of the cabinet or the level line drawn in Step C for cabinets with front overhang**. **Line up the notch and center line on the bottom of the mounting plate to the center line on the wall**.
3. While holding the mounting plate with one hand, draw circles on the wall at holes A, B, C and D (see illustration above/actual plate marked with arrows). **Four holes must be used for mounting**.

NOTE: Holes A,B and C are inside area E. If none of A,B and c is in a stud, find a stud somewhere in area E and draw a fo circle to line up with the stud. It is important to use **at least one wood screw** mounted **firmly in a stud** to support the weight of the microwave. **Set the mounting plate aside**.

4. Drill holes on the circles.
   If there is a stud, drill a 3/16" hole for wood screws. Three holes that don t line up with a stud, drill 5/8" a hole for toggle bolts.
   NOTE: **DO NOT MOUNT THE PLATE AT THIS TIME**.

2. INSTALLATION TYPES (Choose A, B or C)

This microwave oven is designed for adaptation to the following three types of ventilation:

A. Outside Top Exhaust (Vertical Duct)

B. Outside Back Exhaust (Horizontal Duct)

C. Recirculating (Non-Vented Ductless)

NOTE: This microwave is shipped assembled for Recirculating.

A. OUTSIDE TOP EXHAUST (VERTICAL DUCT)

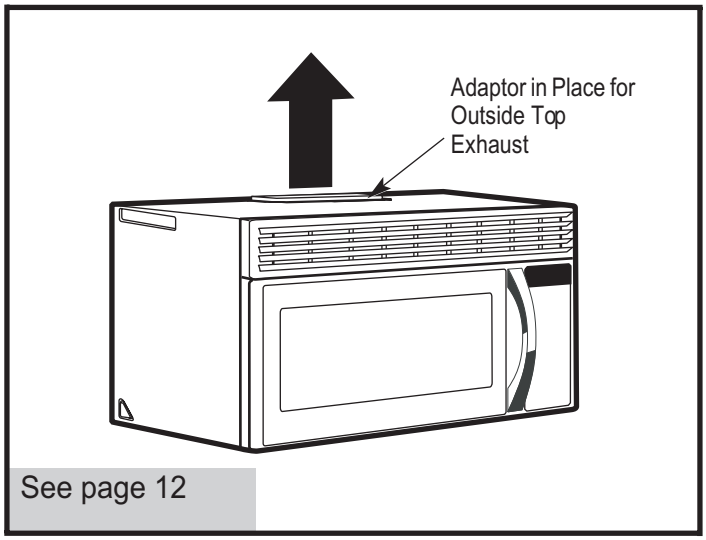

See page 12

B. OUTSIDE BACK EXHAUST (HORIZONTAL DUCT)

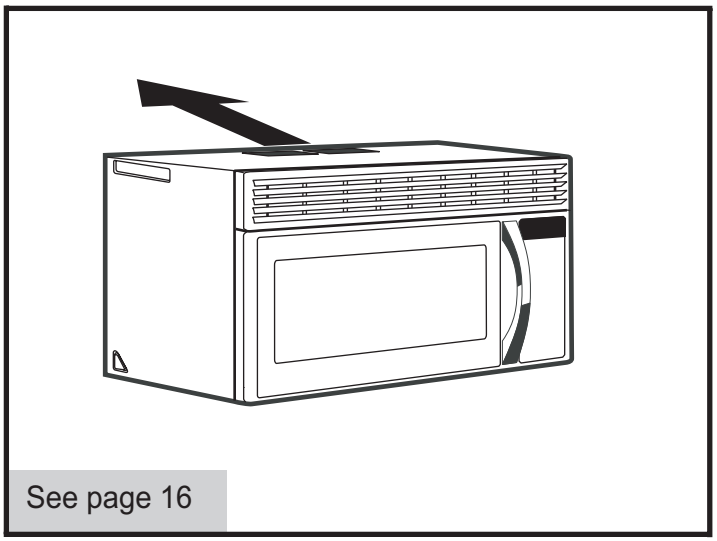

See page 16

C. RECIRCULATING (NON-VENTED DUCTLESS)

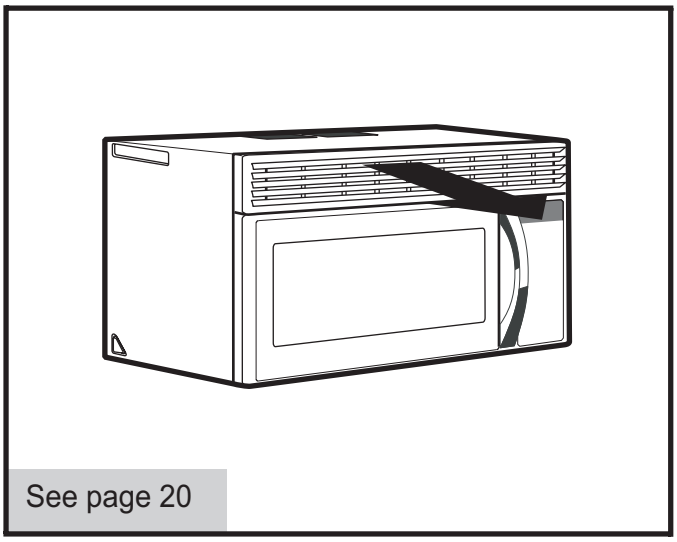

See page 20

A Charcoal Filter Accessory Kit is required for the non-vented exhaust. (See your Owner's Manual for the kit number.)

A. OUTSIDE TOP EXHAUST (Vertical Duct)

INSTALLATION OVERVIEW

A1. Attach Mounting Plate to Wall
A2. Prepare Top Cabinet
A3. Check Microwave Assembly
A4. Check Damper Operation
A5. Mount Microwave Oven
A6. Adjust Exhaust Adaptor
A7. Connect Ductwork

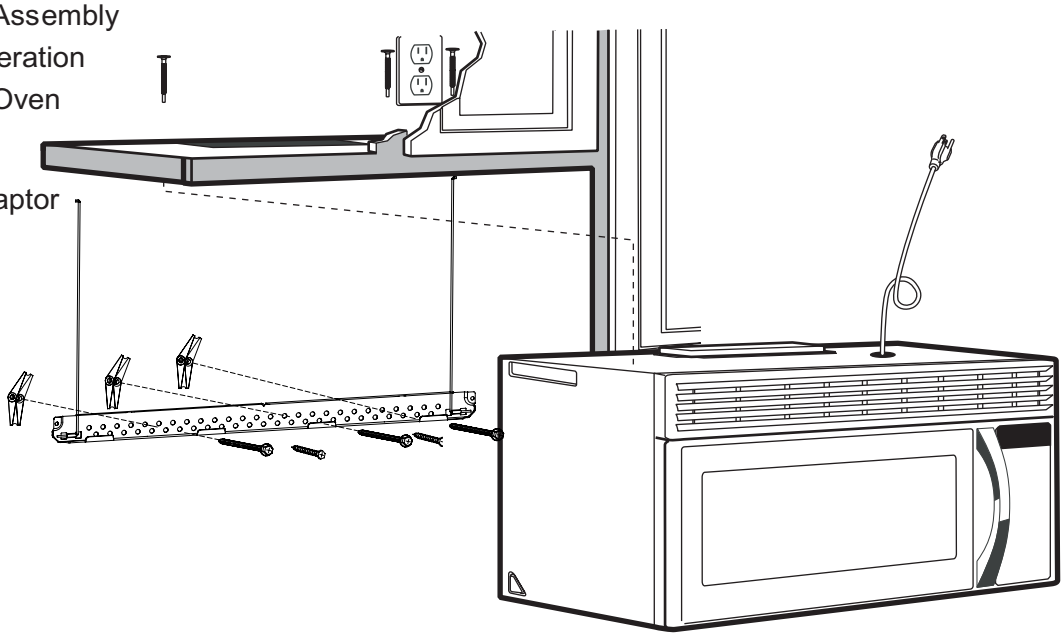

A1. ATTACH THE MOUNTING PLATE TO THE WALL

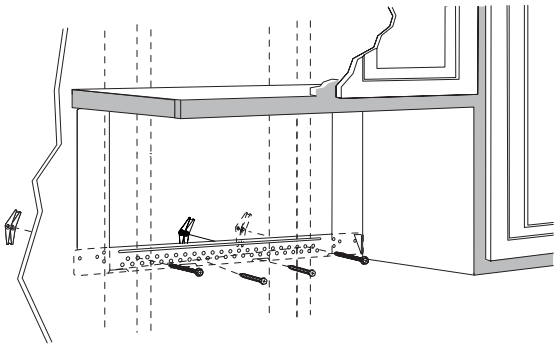

Attach the plate to the wall using toggle bolts. At least one wood screw must be used to attach the plate to a wall stud.

1. Remove the toggle wings from the bolts.

2. Insert the bolts into the mounting plate through the holes designated to go into drywall and reattach the toggle wings to ¾" onto each bolt.

To use toggle bolts:

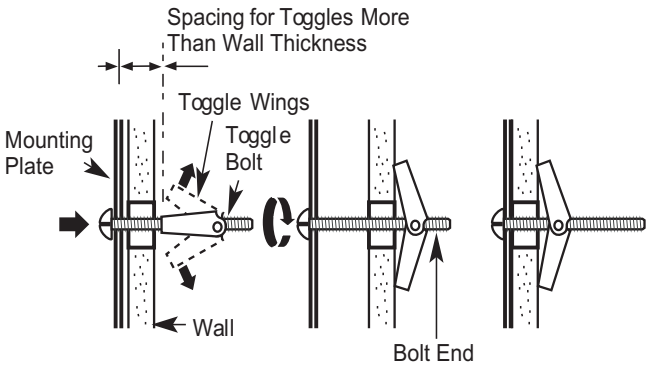

3. Place the mounting plate against the wall and insert the toggle wings into the holes in the wall to mount the plate.

NOTE: Before tightening toggle bolts and wood screw, make sure the tabs on the mounting plate touch the bottom of the cabinet when pushed flush against the wall and that the plate is properly centered under the cabinet.

CAUTION: Be careful to avoid pinching fingers between the back of the mounting plate and the wall.

4. Tighten all bolts. Pull the plate away from the wall to help tighten the bolts.

A2. USE TOP CABINET TEMPLATE FOR PREPARATION OF TOP CABINET

You need to drill holes for the top support screws, a hole large enough for the power cord to fit through, and a cutout large enough for the exhaust adaptor.

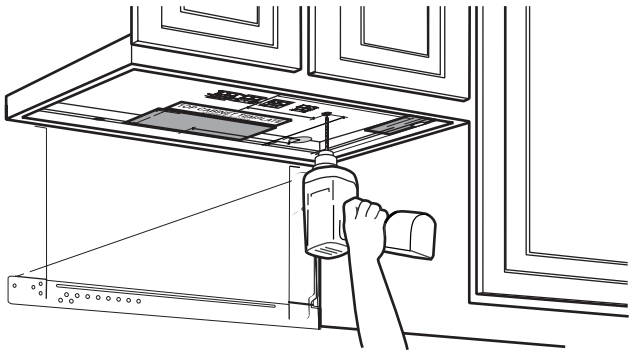

Read the instructions on the TOP CABINET TEMPLATE.

Tape it underneath the top cabinet.

Drill the holes, following the instructions on the TOP CABINET TEMPLATE.

CAUTION: Wear safety goggles when drilling holes in the cabinet bottom.

A3. ADAPTING MICROWAVE BLOWER FOR RECIRCULATION

1. Remove and save screw that holds blower plate to microwave.

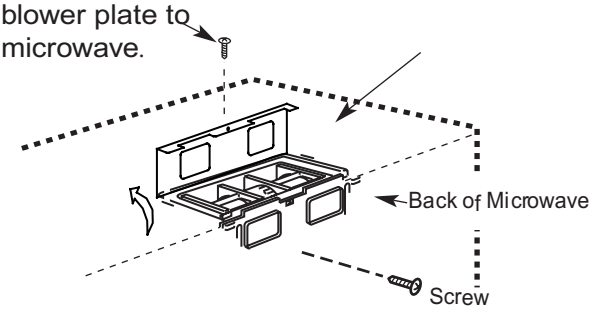

3 Carefully pull out the blower unit. The wires will extend far enough to allow you to adjust the blower unit.

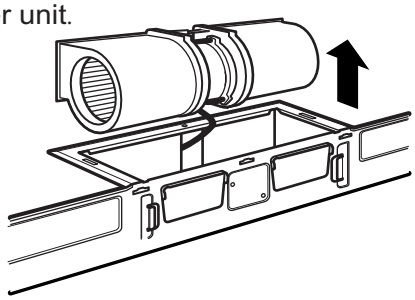

4. Roll the blower unit 90° so that fan blade openings are facing out the up of the microwave.

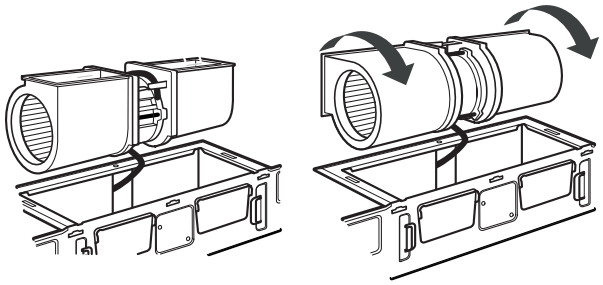

5 Place the blower unit back into the opening.

AFTER: **Fan Blade Openings Facing UP**

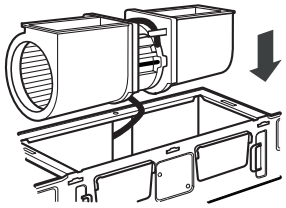

CAUTION: **Do not pull or stretch the blower unit wiring**. **Make sure the wires are not pinched**.

NOTE: **The blower unit exhaust openings should match exhaust openings on rear of microwave oven**.

6 Secure the blower unit to the microwave with the screw from Step 1.

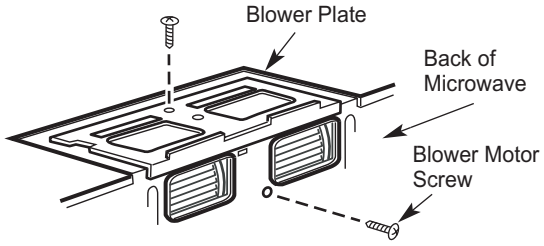

7. Replace the blower plate in the same position as before with the screw.

A4. CHECK FOR PROPER DAMPER OPERATION

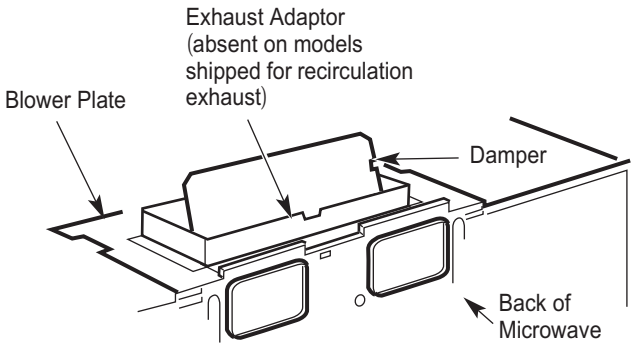

Place the microwave in its upright position, with the top of the unit facing up.

This microwave oven may be shipped assembled for top exhaust (adaptor installed) or for recirculation exhaust (adaptor absent).

Make sure tape securing damper is removed and damper pivots easily before mounting microwave.

You will need to make adjustments to assure proper alignment with your house exhaust duct after the microwave is installed.

A5. MOUNT THE MICROWAVE OVEN

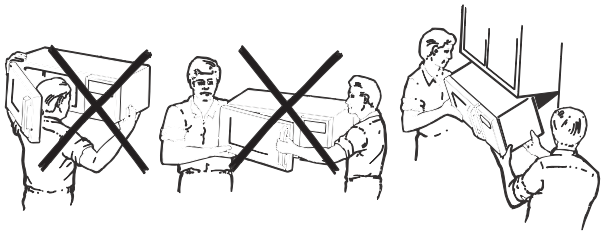

FOR EASIER INSTALLATION AND PERSONAL SAFETY, WE RECOMMEND THAT TWO PEOPLE INSTALL THIS MICROWAVE OVEN.

IMPORTANT: **Do not grip or use handle during installation**.

NOTE: If your cabinet is metal, use the nylon grommet around the power cord hole to prevent cutting of the cord.

NOTE: We recommend using filler blocks if the cabinet front hangs below the cabinet bottom shelf.

IMPORTANT: **If filler blocks are not used**, **case damage may occur from over tightening screws**.

NOTE: When mounting the microwave oven, thread power cord through hole in bottom of top cabinet. Keep it tight throughout Steps 1 3. Do not pinch cord or lift oven by pulling cord.

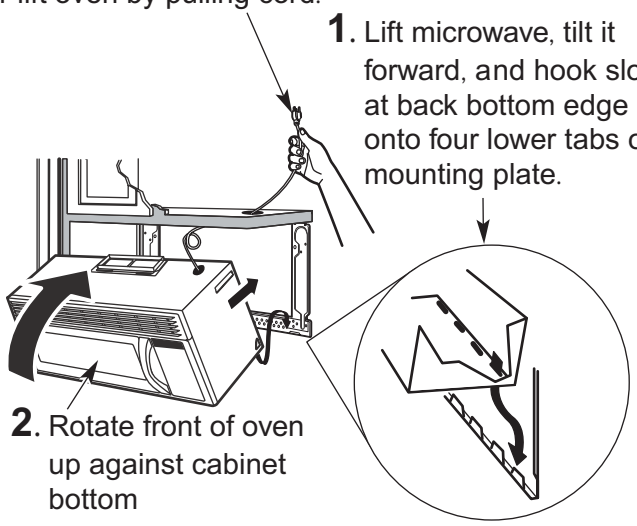

1. Lift microwave, tilt it forward, and hook slots at back bottom edge onto four lower tabs of mounting plate.

2. Rotate front of oven up against cabinet bottom

3. Insert a self-aligning screw through top center cabinet hole. Temporarily secure the oven by turning the screw at least **two full turns** after the threads have engaged. (It will be completely tightened later.) **Be sure to keep power cord tight**. **Be careful not to pinch the cord**, **especially when mounting flush to bottom of cabinet**.

A5. MOUNT THE MICROWAVE OVEN (cont.)

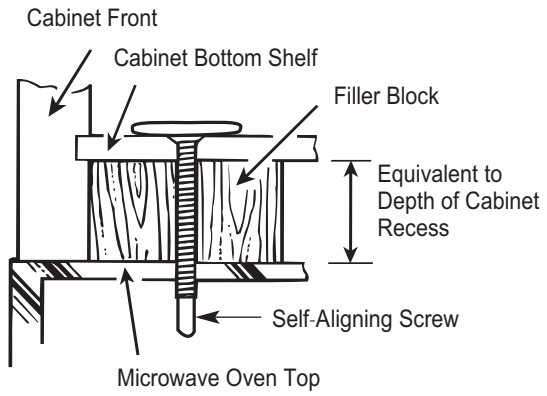

4. Attach the microwave oven to the top cabinet.

5. Insert 2 self-aligning screws through outer top cabinet holes. Turn two full turns on each screw.

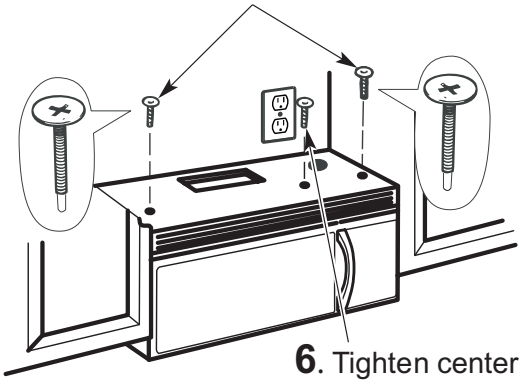

6. Tighten center screw completely.

7. Tighten the outer two screws to the top of the microwave oven. (While tightening screws, hold the microwave oven in place against the wall and the top cabinet.)

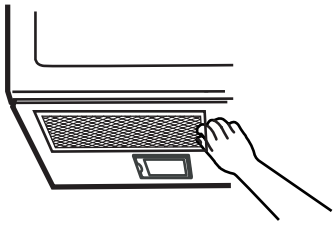

8. Install grease filters. See the Owner s Manual packed with the microwave.

A6. ADJUST THE EXHAUST ADAPTOR

Open the top cabinet and adjust the exhaust adaptor to connect to the house duct.

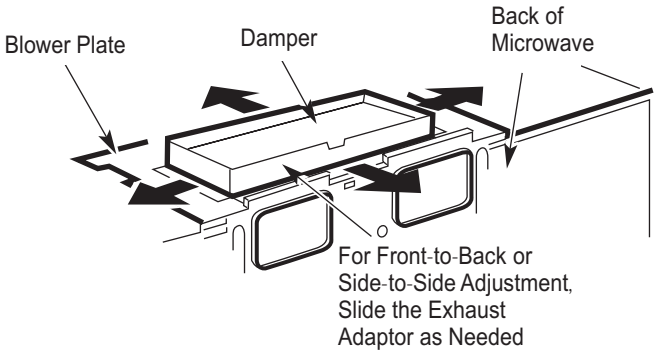

A7. CONNECTING DUCTWORK

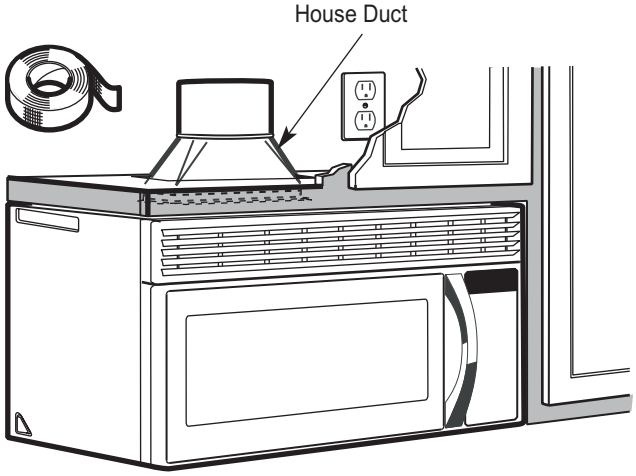

1. Extend the house duct down to connect to the exhaust adaptor.

2. Seal exhaust duct joints using duct tape.

B. OUTSIDE BACK EXHAUST (Horizontal Duct)

INSTALLATION OVERVIEW

B1. Prepare Rear Wall
B2. Attach Mounting Plate to Wall
B3. Prepare Top Cabinet
B4. Adjust Blower
B5. Mount the Microwave Oven

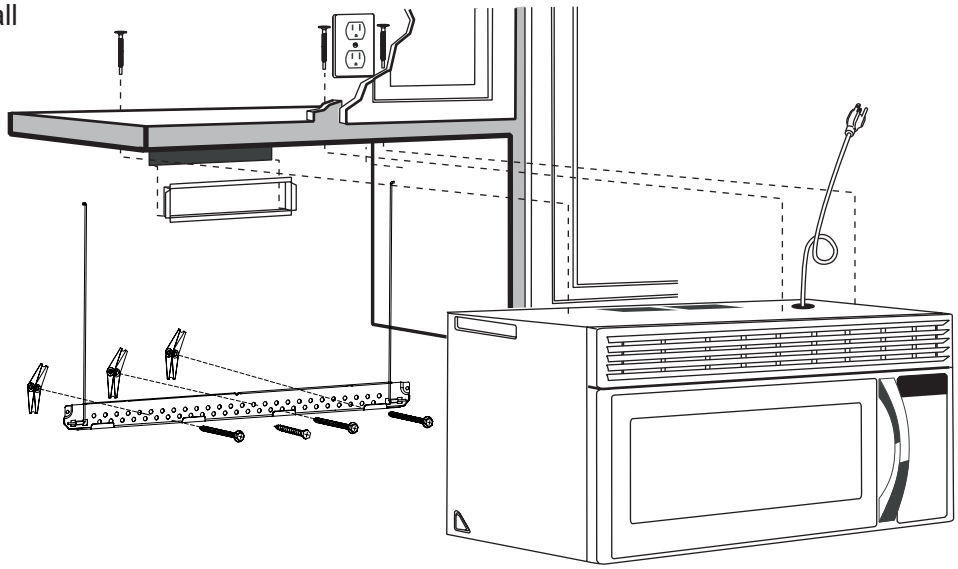

B1. PREPARING THE REAR WALL FOR OUTSIDE BACK EXHAUST

You need to cut an opening in the rear wall for outside exhaust.

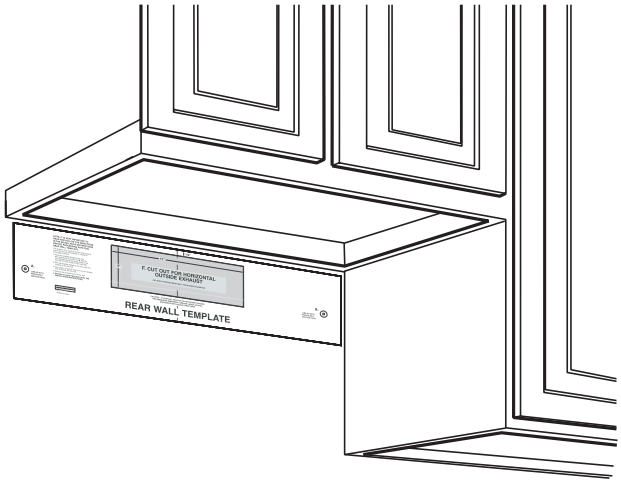

Read the instructions on the REAR WALL TEMPLATE.

Tape it to the rear wall, lining up with the holes previously drilled for holes A and B in the wall plate.

Cut the opening, following the instructions of the REAR WALL TEMPLATE.

B2. ATTACH THE MOUNTING PLATE

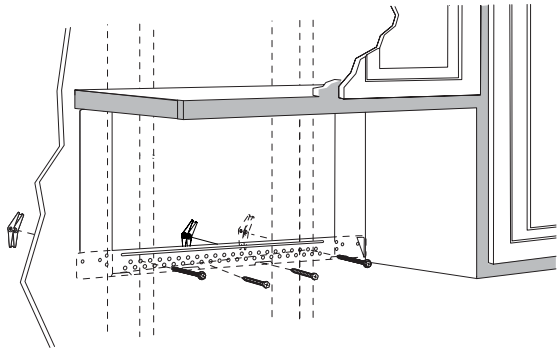

Attach the plate to the wall using toggle bolts. At least one wood screw must be used to attach the plate to a wall stud.

1. Remove the toggle wings from the bolts.
2. Insert the bolts into the mounting plate through the holes designated to go into drywall and reattach the toggle wings to ?" onto each bolt.

To use toggle bolts:

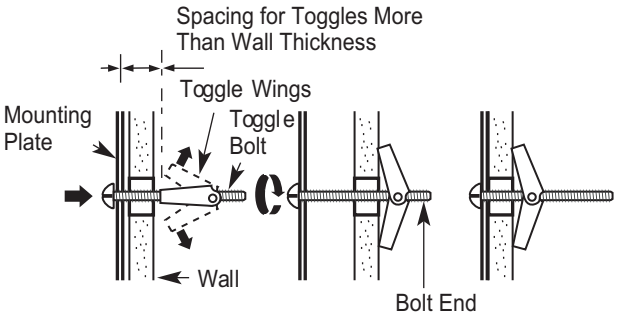

3. Place the mounting plate against the wall and insert the toggle wings into the holes in the wall to mount the plate.

NOTE: Before tightening toggle bolts and wood screw, make sure the tabs on the mounting plate touch the bottom of the cabinet when pushed flush against the wall and that the plate is properly centered under the cabinet.

CAUTION: Be careful to avoid pinching fingers between the back of the mounting plate and the wall.

4. Tighten all bolts. Pull the plate away from the wall to help tighten the bolts.

B3. USE TOP CABINET TEMPLATE FOR PREPARATION OF TOP CABINET

You need to drill holes for the top support screws and a hole large enough for the power cord to fit through.

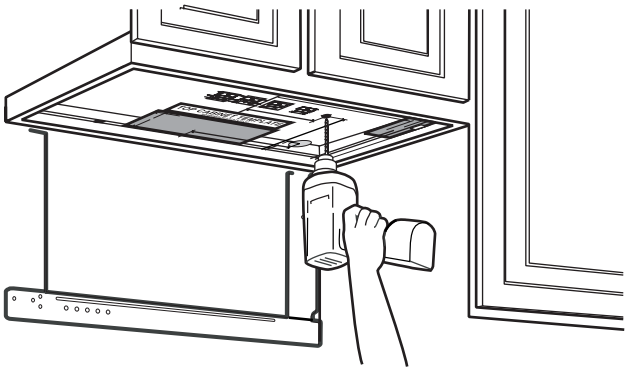

Read the instructions on the TOP CABINET TEMPLATE.

Tape it underneath the top cabinet.

Drill the holes, following the instructions on the TOP CABINET TEMPLATE.

CAUTION: Wear safety goggles when drilling holes in the cabinet bottom.

B4. ADAPTING MICROWAVE BLOWER FOR OUTSIDE BACK EXHAUST

1. Remove and save screw that holds blower motor to microwave,Lift up the blower plate

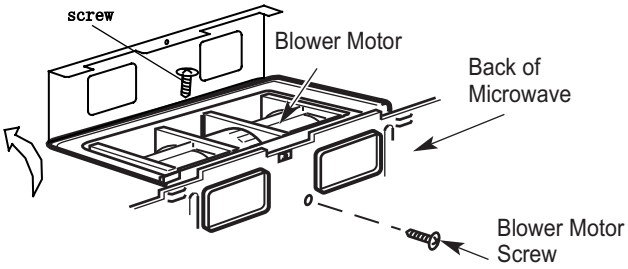

2. Carefully pull out the blower unit. The wires will extend far enough to allow you to adjust the blower unit.

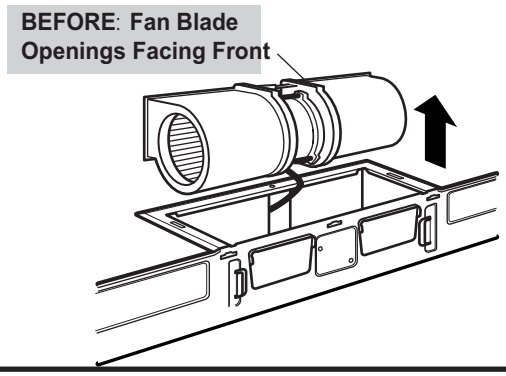

B4 ADAPTING MICROWAVE BLOWER FOR OUTSIDE BACK EXHAUST (cont.)

3. Remove parts "A" with Nipper or Scissors.

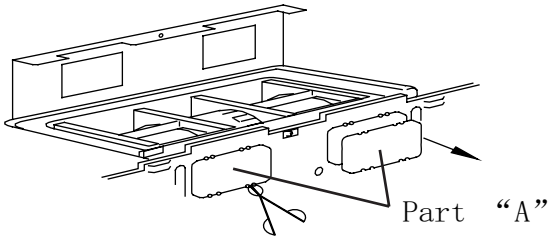

4. Rotate blower unit counterclockwise 180 .

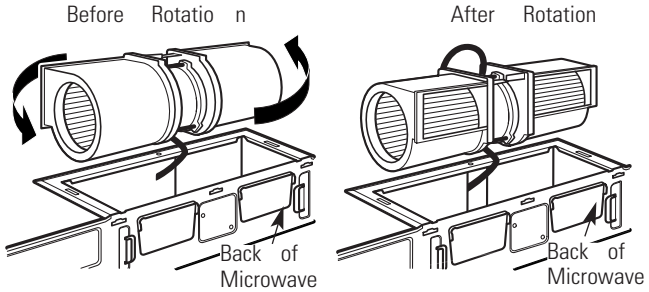

5. Place the blower unit back into the opening.

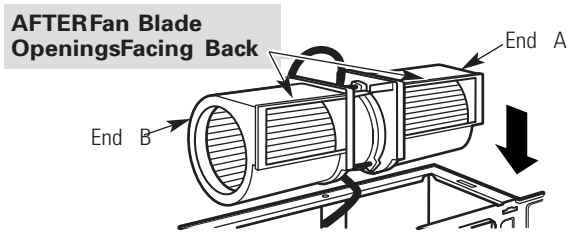

CAUTION: **Do not pull or stretch the blower unit wiring**. **Make sure the wires are not pinched**.

NOTE: **The blower unit exhaust openings should match exhaust openings on rear of microwave oven**.

6. Secure the blower unit to the microwave with the screw from Step 1.

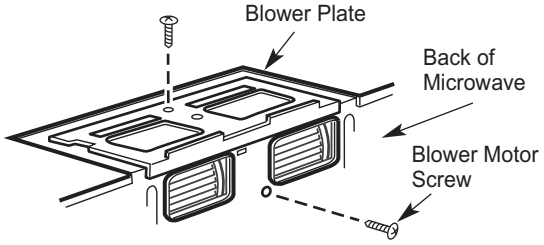

7. Replace the blower plate in the same position as before with the screw.

8. Attach the exhaust adaptor to the rear of the oven by sliding it into the guides at the top center of the back of the oven.

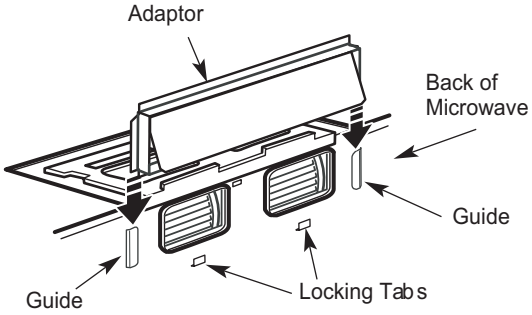

Push in securely until it is in the lower locking tabs. Take care to assure that the damper hinge is installed so that it is at the top and that the damper swings freely.

B5. MOUNT THE MICROWAVE OVEN

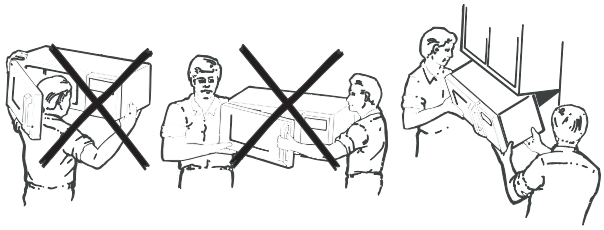

FOR EASIER INSTALLATION AND PERSONAL SAFETY, WE RECOMMEND THAT **TWO PEOPLE INSTALL THIS MICROWAVE OVEN**.

IMPORTANT: **Do not grip or use handle during installation**.

NOTE: If your cabinet is metal, use the nylon grommet around the power cord hole to prevent cutting of the cord.

NOTE: We recommend using filler blocks if the cabinet front hangs below the cabinet bottom shelf.

IMPORTANT: **If filler blocks are not used**, **case damage may occur from over tightening screws**.

NOTE: When mounting the microwave oven, thread power cord through hole in bottom of top cabinet. Keep it tight throughout Steps 1-3 . Do not pinch cord or lift oven by pulling cord.

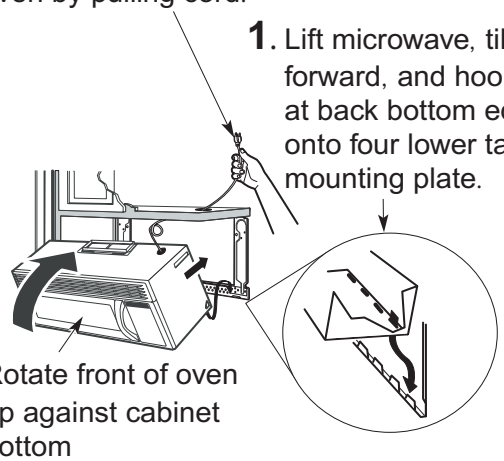

1. Lift microwave, tilt it forward, and hook slots at back bottom edge onto four lower tabs of mounting plate.

2. Rotate front of oven up against cabinet bottom

3. Insert a self-aligning screw through top center cabinet hole. Temporarily secure the oven by turning the screw at least **two full** turns after the threads have engaged. (It will be completely tightened later.) **Be sure to keep power cord tight**. **Be careful not to pinch the cord**, **especially when mounting flush to bottom of cabinet**.

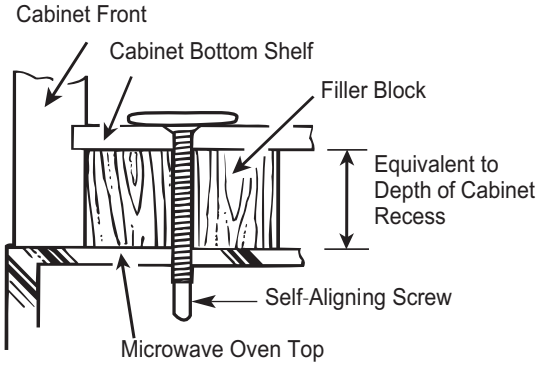

4. Attach the microwave oven to the top cabinet.

5. Insert 2 self-aligning screws through outer top cabinet holes. Turn two full turns on each screw.

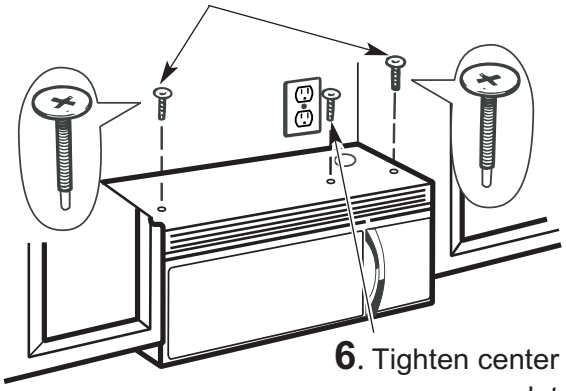

6. Tighten center screw completely.

7. Tighten the outer two screws to the top of the microwave oven. (While tightening screws, hold the microwave oven in place against the wall and the top cabinet.)

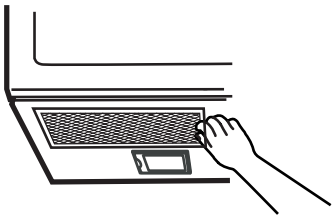

8. Install grease filters. See the Owner s Manual packed with the microwave.

C. RECIRCULATING (Non-Vented Ductless)

INSTALLATION OVERVIEW

C1. Attach Mounting Plate to Wall
C2. Prepare Top Cabinet
C3. Mount the Microwave Oven
C4. Install Charcoal Filter

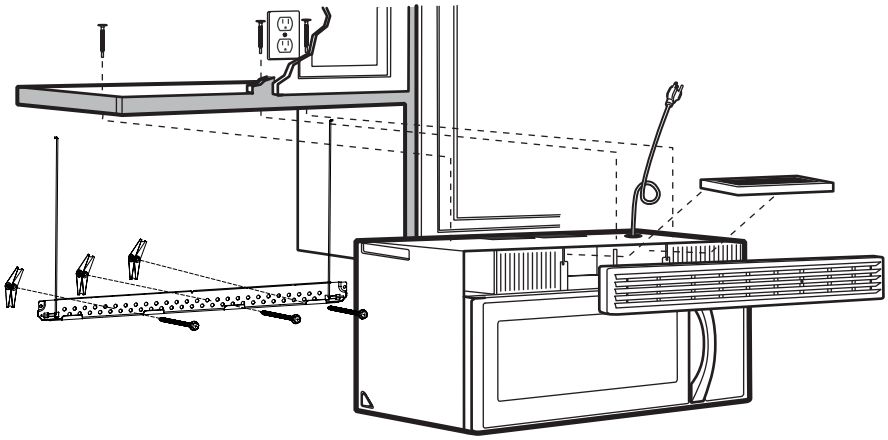

C1. ATTACH THE MOUNTING PLATE TO THE WALL

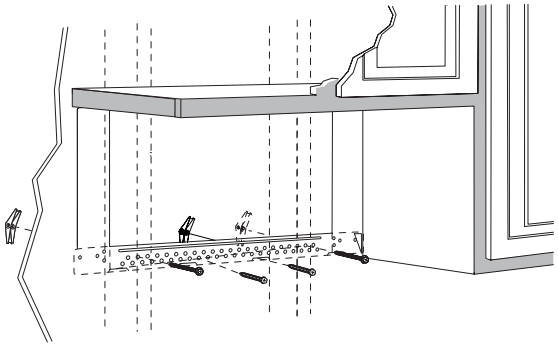

Attach the plate to the wall using toggle bolts. At least one wood screw must be used to attach the plate to a wall stud.

1. Remove the toggle wings from the bolts.

2. Insert the bolts into the mounting plate through the holes designated to go into drywall and reattach the toggle wings to ¾" onto each bolt.

To use toggle bolts:

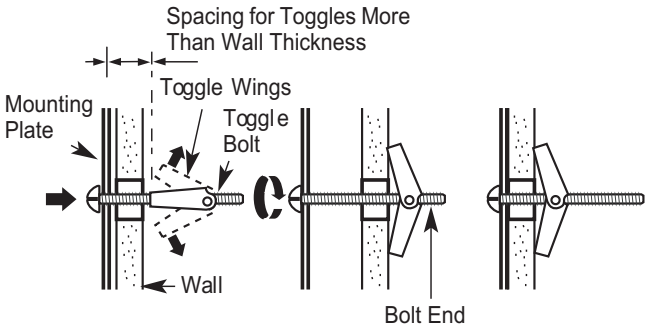

3. Place the mounting plate against the wall and insert the toggle wings into the holes in the wall to mount the plate.

NOTE: Before tightening toggle bolts and wood screw, make sure the tabs on the mounting plate touch the bottom of the cabinet when pushed flush against the wall and that the plate is properly centered under the cabinet.

CAUTION: Be careful to avoid pinching fingers between the back of the mounting plate and the wall.

4. Tighten all bolts. Pull the plate away from the wall to help tighten the bolts.

C2. USE TOP CABINET TEMPLATE FOR PREPARATION OF TOP CABINET

You need to drill holes for the top support screws and a hole large enough for the power cord to fit through.

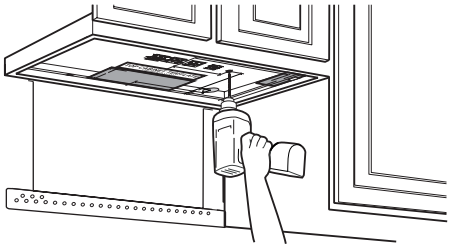

Read the instructions on the TOP CABINET TEMPLATE.

Tape it underneath the top cabinet.

Drill the holes, following the instructions on the TOP CABINET TEMPLATE.

CAUTION: Wear safety goggles when drilling holes in the cabinet bottom.

C3. MOUNT THE MICROWAVE OVEN

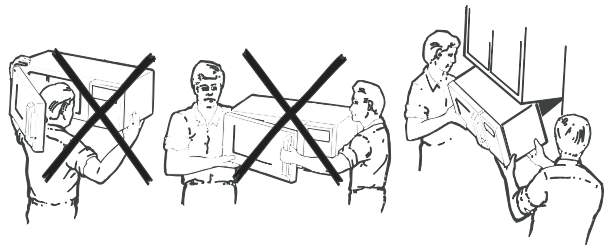

FOR EASIER INSTALLATION AND PERSONAL SAFETY, WE RECOMMEND THAT **TWO PEOPLE INSTALL THIS MICROWAVE OVEN**.

IMPORTANT: **Do not grip or use handle during installation**.

NOTE: If your cabinet is metal, use the nylon grommet around the power cord hole to prevent cutting of the cord.

NOTE: We recommend using filler blocks if the cabinet front hangs below the cabinet bottom shelf.

IMPORTANT: **If filler blocks are not used**, **case damage may occur from over tightening screws**.

NOTE: When mounting the microwave oven, thread power cord through hole in bottom of top cabinet. Keep it tight throughout Steps 1−3. Do not pinch cord or lift oven by pulling cord.

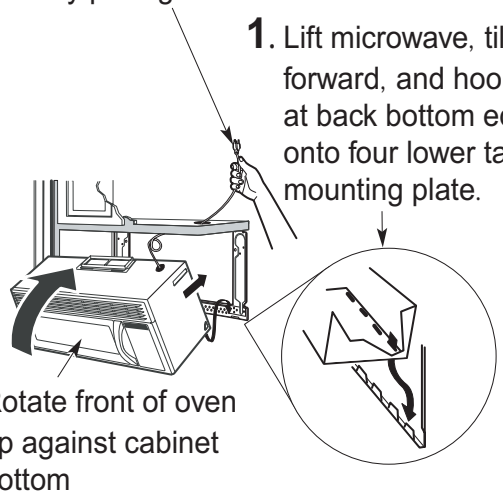

1. Lift microwave, tilt it forward, and hook slots at back bottom edge onto four lower tabs of mounting plate.

2. Rotate front of oven up against cabinet bottom

3. Insert a self-aligning screw through top center cabinet hole. Temporarily secure the oven by turning the screw at least **two full turns** after the threads have engaged. (It will be completely tightened later.) **Be sure to keep power cord tight**. **Be careful not to pinch the cord**, **especially when mounting flush to bottom of cabinet**.

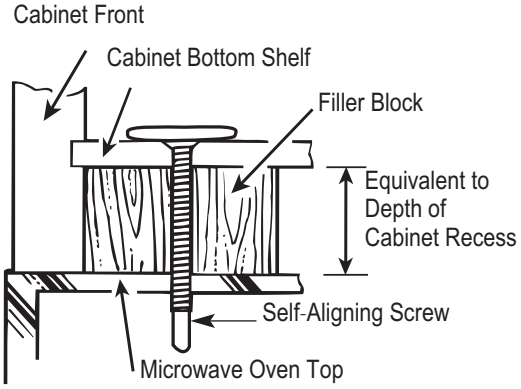

4. Attach the microwave oven to the top cabinet.

C3 MOUNT THE MICROWAVE OVEN (cont.)

5. Insert 2 self-aligning screws through outer top cabinet holes. Turn two full turns on each screw.

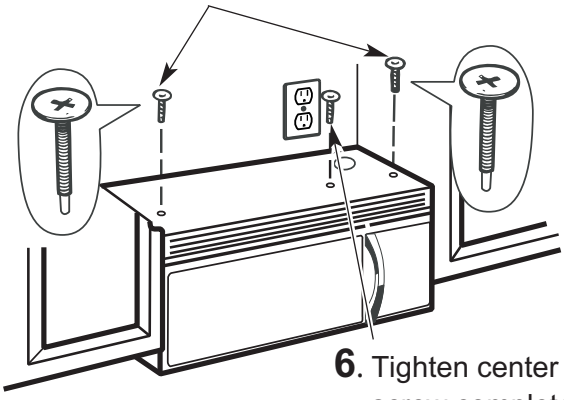

6. Tighten center screw completely.

7. Tighten the outer two screws to the top of the microwave oven. (While tightening screws, hold the microwave oven in place against the wall and the top cabinet.)

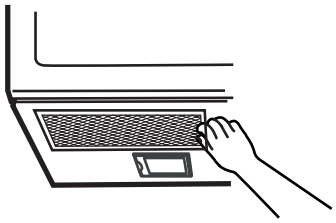

8. Install grease filters. See the Owner s Manual packed with the microwave.

C4. INSTALLING THE CHARCOAL FILTER

1. Remove screws on top of grille using a #1 Phillips screwdriver.

2. Open the door.

3. Remove the grille.
Pull the grille straight off.

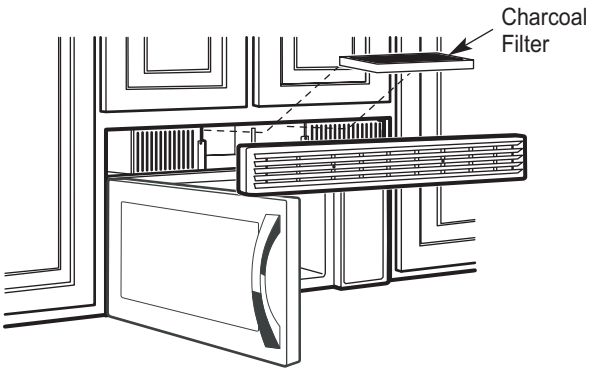

4. Install the charcoal filter. When properly installed, the wire mesh of the filter should be visible from the front.

5. Replace the grille and the screws.

6. Close the door.

MO14XX Series Models

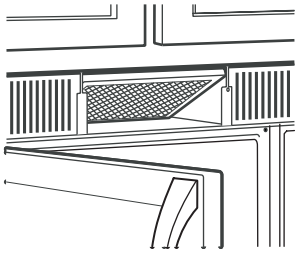

Insert mesh-side down

MO16XX Series Models

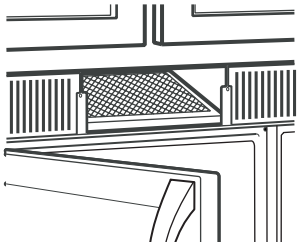

Insert mesh-side up

BEFORE YOU USE YOUR MICROWAVE

1. Make sure the microwave oven has been installed according to instructions.

2. Remove all packing material from the microwave oven.

3. Install turntable and ring in cavity.

4. Replace house fuse or turn breaker back on.

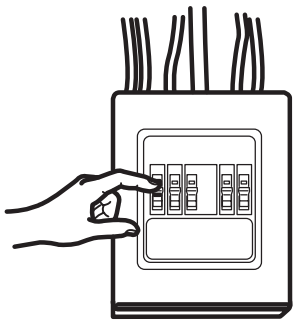

5. Plug power cord into a dedicated 20 amp electrical outlet.

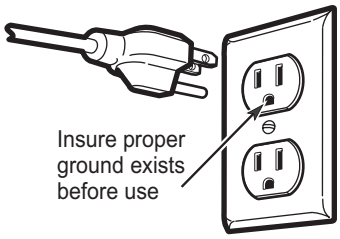

6. Read the Owner s Manual.

7. KEEP INSTALLATION INSTRUCTIONS FOR THE LOCAL INSPECTOR扮 USE.