DOMETIC

REFRIGERATION
REFRIGERATOR

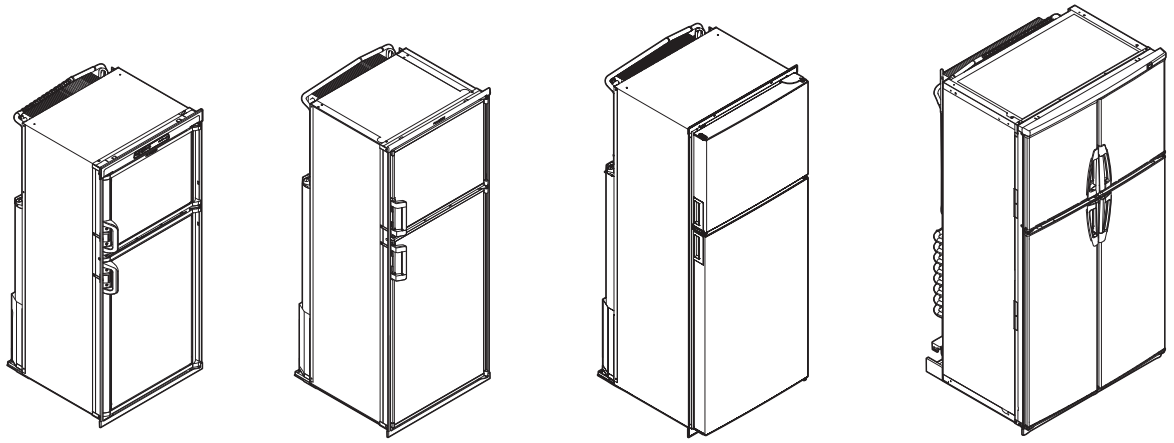

RM2351, RM2354, RM2451, RM2454, RM2551, RM2554, DM2652, DM2662, DM2663, DM2672, DM2682, DM2683, DMA4061, DMA4064, DMA4067, DMA4068, DM2852, DM2862, DM2872, DM2882, DMA4081, DMA4084, DMA4087, RM3762, RM3962, RM1350, RM1350SL

DM, RM & DMA Refrigerators

Installation Manual. 2

WARNING FIRE OR EXPLOSION HAZARD.
Improper installation, adjustment, alteration, service or maintenance can cause injury or property damage. Refer to this manual. For assistance or additional information, consult a qualified installer, service agency or the gas supplier. Failure to follow these instructions could result in fire or explosion, which could cause property damage, personal injury or death.

WARNING FIRE OR EXPLOSION HAZARD.
If the refrigerator stops cooling - or - if it emits an ammonia smell, immediately turn the refrigerator off and contact a Service Center. Failure to follow these instructions could result in fire or explosion, which could cause property damage, personal injury or death.

WARNING
Cancer and Reproductive Harm
www.P65Warnings.ca.gov

WARNING FIRE OR EXPLOSION HAZARD.

IF YOU SMELL GAS:

- **Open windows.**
- **Do not attempt to light any appliance and make sure all appliances are OFF.**
- **Extinguish any open flame.**
- **Do not touch any electrical switches.**
- **Do not use electronic devices, such as cell phones or landline phones.**
- **Evacuate the building or recreational vehicle.**
- **Shut off fuel supply at LP tank.**
- **Call emergency services.**

Failure to follow these instructions could result in fire or explosion, which could cause property damage, personal injury or death.

FOR YOUR SAFETY: Do not store or use gasoline or other flammable vapors and liquids in the vicinity of this or any other appliance.

C US

REVISION I | Form No. 3313238.036 4/21 | ©2021 Dometic Corporation

NORTH AMERICAN ADDRESS INFORMATION

USA & CANADA
Service Office
Dometic Corporation
5155 Verdant Drive
Elkhart, IN 46514
1-800-544-4881 OPT 1

Service Center & Dealer Locations
Visit: Dometic.com/support

Read these instructions carefully. These instructions MUST stay with this product.

CONTENTS

1 Explanation of symbols and safety instructions 3
2 General information 4
3 Intended use 4
4 Specifications 5
5 Prepare for installation 16
6 Installation 26
7 Disposal. 55

1 EXPLANATION OF SYMBOLS AND SAFETY INSTRUCTIONS

This manual has safety information and instructions to help you eliminate or reduce the risk of accidents and injuries.

1.1 Recognize Safety Information

This is the safety alert symbol. It is used to alert you to potential physical injury hazards. Obey all safety messages that follow this symbol to avoid possible injury or death.

1.2 Understand Signal Words

A signal word will identify safety messages and property damage messages, and will indicate the degree or level of hazard seriousness.

WARNING Indicates a hazardous situation that, if **not** avoided, could result in death or serious injury.

CAUTION Indicates a hazardous situation that, if **not** avoided, could result in minor or moderate injury.

NOTICE Is used to address practices **not** related to physical injury.

Indicates additional information that is **not** related to physical injury.

1.3 Supplemental Directives

Read and follow all safety information and instructions to avoid possible injury or death.
Read and understand these instructions before installation of this product.
Incorrect installation of this product can lead to serious injury.
The installation **must** comply with all applicable local or national codes, including the latest edition of the following standards:

This appliance is certified under the latest edition of ANSI Z21.19, CSA 1.4 Refrigerators using gas fuel. The installation must conform with local codes, or in absence of local codes, the following standards as applicable:

U.S.A.

- ANSI/NFPA70, National Electrical Code (NEC)
- ANSI/NFPA 1192, Recreational Vehicles Code
- Title 24 CFR, Part 3280, Manufactured Home Construction and Safety Standard
- National Fuel Gas Code, ANSI Z223.1/NFPA 54

Canada

- CSA C22.1, Parts I & II, Canadian Electrical Code
- CSA Z240 RV Series, Recreational Vehicles
- CSA Z240.4, Gas-Equipped Recreational Vehicles and Mobile Housing
- CSA B149.1, Natural Gas and Propane Installation Code CERTIFICATION

Any modifications or deviations to this product:

- Will void agency certifications.
- Will void refrigerator warranty.

1.4 General Safety Messages

WARNING **ELECTRICAL SHOCK, FIRE, AND/OR EXPLOSION HAZARD.** Failure to obey the following warnings could result in death or serious injury:

- This product is equipped with a three-prong, (grounding) plug for protection against shock hazards. This product should be plugged directly into a three-prong receptacle that provides grounding in compliance with all applicable electrical codes. Do **not** cut or remove grounding prong from plug.
- Before refueling or parking near a gasoline pump, make sure all LP gas appliances (vented to the outside of the RV) are shut off. Otherwise, fumes from gasoline pumps could come into contact with an LP gas appliance burner flame and ignite.

- Do **not** store or use gasoline, oil- or gasoline-soaked rags, or other flammable vapors and liquids in the service area behind the refrigerator or in the vicinity of this or any other gas appliance.

⚠WARNING FIRE, BURN, FROSTBITE, OR INHALATION HAZARD. Failure to obey the following warnings could result in death or serious injury:

- Any modifications or deviations can lead to carbon monoxide leaking into the living area.
- Do **not** fracture or puncture the cooling unit.
- **Absorption-Cooling System:** The cooling unit is under pressure and contains ammonia, sodium chromate, and other chemicals. Repeated or prolonged exposure to sodium chromate could cause organ damage or cancer. Exposure to a high concentration of ammonia refrigerant could cause pulmonary edema (fluid in lungs); chemical burns to eyes, lungs, and skin; and could cause a fire (when exposed to open flame).
- **Compressor-Cooling System:** The cooling unit is under pressure and contains tetrafluoroethane refrigerant, and may contain other chemicals. Contact with liquid refrigerant could cause irritation or frostbite to eyes and skin. Exposure to a high concentration of refrigerant could cause cardiac arrhythmia (irregular heartbeat). A high concentration of refrigerant could cause a fire (when exposed to open flame).
- If the refrigerator stops working and/or it emits an ammonia smell, immediately turn refrigerator **off** (if it is safe to do so), leave the vicinity, and contact a qualified Service Center.

⚠WARNING LIFTING HAZARD.

Use proper lifting technique and control when lifting the product. Failure to obey this warning could result in death or serious injury.

⚠WARNING Failure to obey the following warnings could result in death or serious injury:

- This product must be installed by a qualified service technician.
- Any modifications or deviations can reduce cooling performance and/or result in damage to the refrigerator.

2 GENERAL INFORMATION

Optional Parts*	Reference Number
Innovator Refrigerator Ventilation System	3108705.751, 3108705.744
Z-bracket	3103812.xxx

*Available as accessory (not included)

3 INTENDED USE

The DM, RM, and DMA refrigerators are designed and intended for use only inside a recreational vehicle (hereinafter referred to as "RV") for which it is supplied. Use the instructions to ensure correct installation of the refrigerator. Dometic Corporation accepts no liability for damage in the following cases:

- Faulty assembly or connection.
- Damage to the product resulting from mechanical influences and excess voltage.
- Alterations to the product without expressed permission from Dometic Corporation.
- Use for purposes other than those described in the operating manual.

Dometic Corporation reserves the right to modify appearances and specifications without notice.

3.1 Safe Storage

If this product is placed in storage for extended periods, it should be located in ambient conditions that do not go below a minimum temperature of -30 °F (-35 °C) or above a maximum temperature of 130 °F (54 °C) for periods in excess of 12 hours at one time.

3.2 Safe Operation

For purposes of operation, this product should not be operated in temperatures that go below a minimum temperature of 5 °F (-15 °C) or above a maximum temperature of 110 °F (43 °C) for periods in excess of 12 hours at one time.

4 SPECIFICATIONS

4.1 Overall and Rough-in Dimensions for Enclosure

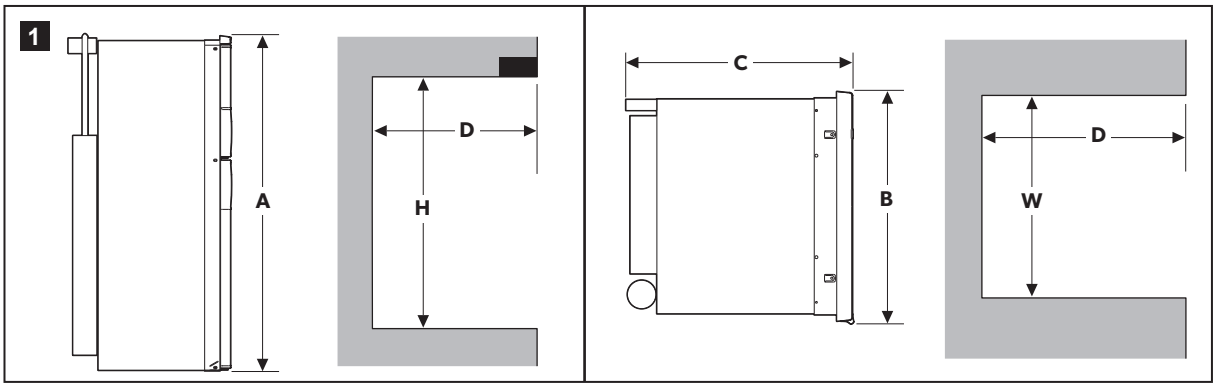

	OVERALL DIMENSIONS			ENCLOSURE DIMENSIONS		
MODEL	Height (A)	Width (B)	Depth (C)	Height (H)	Width (W)	Depth (D)
RM2351	30-3/16"	21-7/8"	22-11/16"	29-3/4"	20-1/2"	21-1/2"
RM2354	30-3/16"	21-7/8"	22-11/16"	29-3/4"	20-1/2"	21-1/2"
RM2451	37-3/8"	24-7/8"	24-11/16"	36-1/2"	23-11/16"	24"
RM2454	37-3/8"	24-7/8"	24-11/16"	36-1/2"	23-11/16"	24"
RM2551	43-1/2"	24-7/8"	24-11/16"	42-5/8"	23-11/16"	24"
RM2554	43-1/2"	24-7/8"	24-11/16"	42-5/8"	23-11/16"	24"
DM2652	54-11/16"	24-7/8"	26-1/16"	53-3/4"	23-11/16"	24"[3]
DM2662	54-11/16"	24-7/8"	26-1/16"	53-3/4"	23-11/16"	24"[3]
DM2663	54-11/16"	24-7/8"	26-1/16"	53-3/4"	23-11/16"	24"[3]
DM2672	55"	24-7/8"	26-3/16"	53-3/4"	23-11/16"	24"[3]
DM2682	55"	24-7/8"	26-3/16"	53-3/4"	23-11/16"	24"[3]
DM2683	55"	24-7/8"	26-3/16"	53-3/4"	23-11/16"	24"[3]
DMA4061	55"	24-7/8"	25-5/8"	53-3/4"	23-11/16"	22-1/4"
DMA4064	55"	24-7/8"	25-5/8"	53-3/4"	23-11/16"	22-1/4"
DMA4067	55"	24-7/8"	25-5/8"	53-3/4"	23-11/16"	22-1/4"

	OVERALL DIMENSIONS			ENCLOSURE DIMENSIONS		
MODEL	**Height (A)**	**Width (B)**	**Depth (C)**	**Height (H)**	**Width (W)**	**Depth (D)**
DMA4068	55"	24-7/8"	25-5/8"	53-3/4"	23-11/16"	22-1/4"
DM2852	60-13/16"	24-7/8"	26-1/16"	59-15/16"	23-11/16"	24"[3]
DM2862	60-13/16"	24-7/8"	26-1/16"	59-15/16"	23-11/16"	24"[3]
DM2872	61-1/8"	24-7/8"	26-3/16"	59-15/16"	23-11/16"	24"[3]
DM2882	61-1/8"	24-7/8"	26-3/16"	59-15/16"	23-11/16"	24"[3]
DMA4081	61-1/4"	24-7/8"	25-5/8"	59-15/16"	23-11/16"	22-1/4"
DMA4084	61-1/4"	24-7/8"	25-5/8"	59-15/16"	23-11/16"	22-1/4"
DMA4087	61-1/4"	24-7/8"	25-5/8"	59-15/16"	23-11/16"	22-1/4"
RM3762	54-3/4"	25-5/64"	26-1/16"	53-3/4"	23-11/16"	24"[3]
RM3962	63-15/16"	25-5/64"	26-1/16"	62-15/16"	23-11/16"	24"[3]
RM1350	64-5/16"	33-11/16"	28-1/16"[1] 29-1/2"[2]	63-3/16"	32-3/4"	26-1/16"
RM1350SL	64-5/16"	33-11/16"	26-1/16"[1] 27-1/2"[2]	63-3/16"	32-3/4"	24-1/16"

[1] Steel Doors

[2] Door Insert Panels

[3] Add 1" depth for units with one or two optional ventilator fans.

4.2 Door Panel Dimensions

RM2351, RM2354, RM2451, RM2454, DM2652, DM2662, DM2663, DM2672, DM2682, DM2683, RM2551, RM2554, RM3762, DM2852, DM2862, DM2872, DM2882, RM3962 PANEL DIMENSIONS (MAX. THICKNESS 5/32")				
Model	**Height Max.**	**Height Min.**	**Width Max.**	**Width Min.**
UPPER DOOR				
DM2652 DM2662 DM2663 DM2852 DM2862	15-27/32"	15-25/32"	20-3/4"	20-5/8"
DM2672 DM2682 DM2683 DM2872 DM2882	17-25/32"	17-23/32"	22-1/4"	22-1/8"
RM3762 RM3962	17-3/64"	16-31/32"	23-25/32"	23-11/16"
LOWER DOOR/SINGLE DOOR				
RM2351 RM2354	26-17/64"	26-3/16"	19-5/8"	19-17/32"
RM2451 RM2454 DM2652 DM2662 DM2663	32-9/16"	32-1/2"	20-3/4"	20-5/8"
RM2551 RM2554 DM2852 DM2862	38-11/16"	38-5/8"	20-3/4"	20-5/8"
DM2672 DM2682 DM2683	32-29/32"	32-27/32"	22-1/4"	22-1/8"
DM2872 DM2882	39-1/16"	39"	22-1/4"	22-1/8"
RM3762	32-7/16"	32-23/64"	23-25/32"	23-11/16"
RM3962	41-39/64"	41-9/16"	23-25/32"	23-11/16"

RM1350 PANEL DIMENSIONS (MAX. THICKNESS 5/32")				
Model	**Height Max.**	**Height Min.**	**Width Max.**	**Width Min.**
		UPPER DOOR		
RM1350M RM1350SLM RM1350MIM RM1350WIM RM1350WID (left)	19-7/32"	19-9/64"	15-43/64"	15-19/32"
RM1350WID (right)	9-9/32"	9-13/64"	15-43/64"	15-19/32"
		LOWER DOOR		
RM1350M RM1350SLM RM1350MIM RM1350WIM (right) RM1350WID	40-1/32"	39-31/32"	15-43/64"	15-19/32"
RM1350WIM (left)	**A:** 5-63/64" **C:** 11-55/64" **E:** 15-43/64"	**A:** 5-29/32" **C:** 11-49/64" **E:** 15-9/32"	**B:** 9-49/64" **D:** 28-17/64" **F:** 40-1/32"	**B:** 9-11/16" **D:** 28-3/16" **F:** 39-31/32"

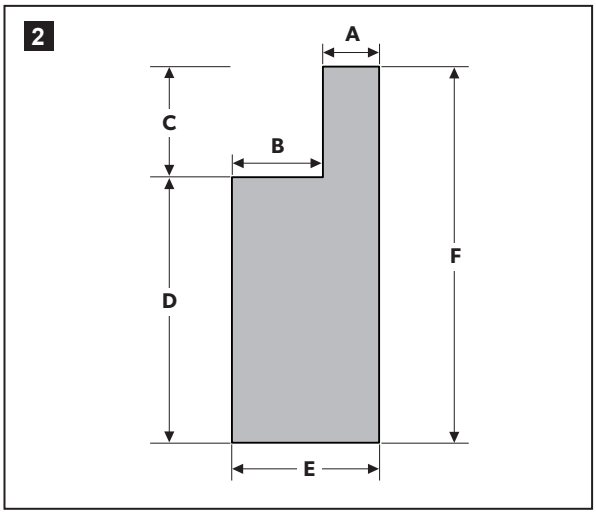

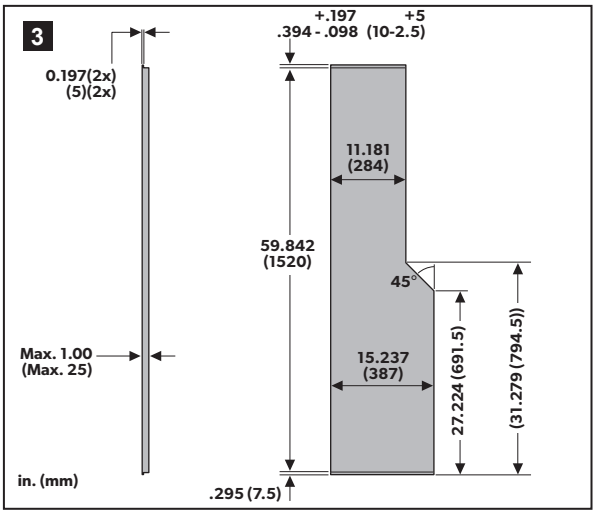

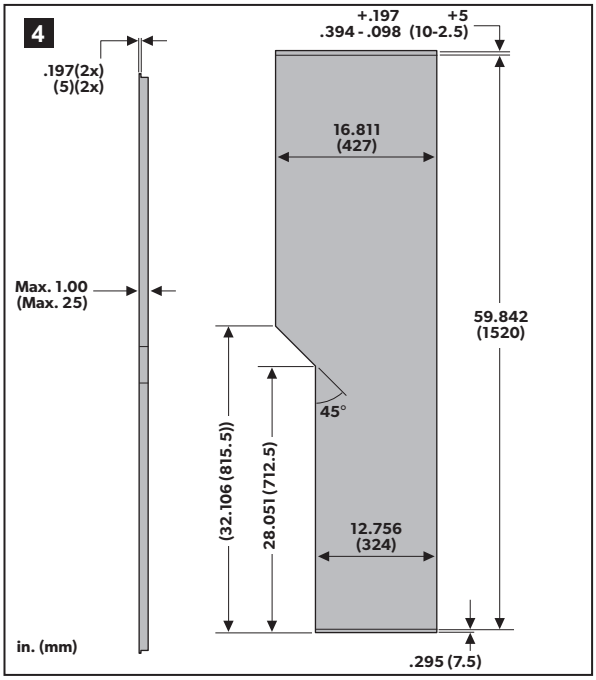
4
.197(2x)
(5)(2x)
+.197 +5
.394 - .098 (10-2.5)
16.811
(427)
Max. 1.00
(Max. 25)
59.842
(1520)
45°
(32.106 (815.5))
28.051 (712.5)
12.756
(324)
in. (mm)
.295 (7.5)

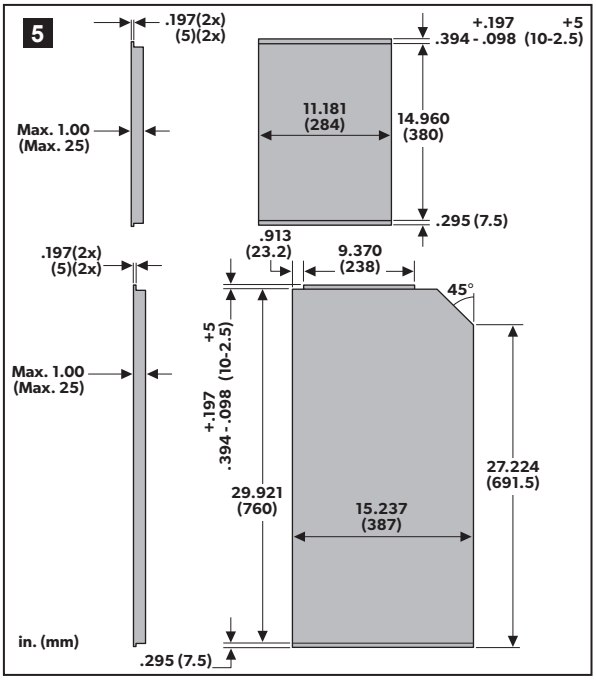
5
.197(2x)
(5)(2x)
+.197 +5
.394 - .098 (10-2.5)
Max. 1.00
(Max. 25)
11.181
(284)
14.960
(380)
.295 (7.5)
.913
(23.2)
9.370
(238)
45°
+5
+.197 (10-2.5)
.394 - .098
29.921
(760)
15.237
(387)
27.224
(691.5)
in. (mm)
.295 (7.5)

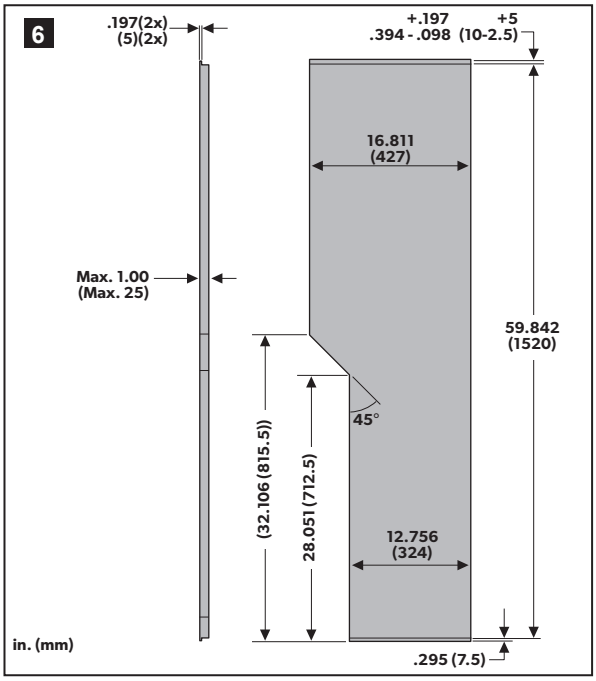
6
.197(2x)
(5)(2x)
+.197 +5
.394 - .098 (10-2.5)
16.811
(427)
Max. 1.00
(Max. 25)
59.842
(1520)
45°
(32.106 (815.5))
28.051 (712.5)
12.756
(324)
in. (mm)
.295 (7.5)

4.3 Clearances

The maximum clearances specified are necessary for correct refrigerator performance. CSA International certification allows the refrigerator to have zero inch minimum clearance at the sides, rear, top, and bottom.

Clearances	
Top (G)	0" Min. to 1/4" Max.
Side (K)	0" Min. to 1/4" Max.
Bottom (L)	0" Min. to 0" Max.
Rear (M[1])	0" Min. to 1" Max.

[1] The distance between the refrigerator cooling unit and the wall or baffle behind it

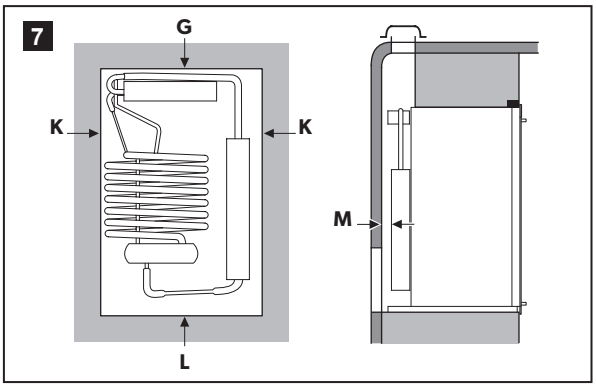

4.4 Minimum Ventilation Heights

Model	B1	B2	Model	B1	B2
RM2351	31"	28"	DMA4067	57-3/4"	56"
RM2354	31"	28"	DMA4068	57-3/4"	56"
RM2451	37-3/4"	36"	DM2852	63-3/4"	61"
RM2454	37-3/4"	36"	DM2862	63-3/4"	61"
RM2551	44-1/2"	42"	DM2872	63-3/4"	61"
RM2554	44-1/2"	42"	DM2882	63-3/4"	61"
DM2652	57-3/4"	56"	DMA4081	63-3/4"	61"
DM2662	57-3/4"	56"	DMA4084	63-3/4"	61"
DM2663	57-3/4"	56"	DMA4087	63-3/4"	61"
DM2672	57-3/4"	56"	RM3762	57-3/4"	56"
DM2682	57-3/4"	56"	RM3962	66-13/16"	63"
DM2683	57-3/4"	56"	RM1350	69-1/8"	63"
DMA4061	57-3/4"	56"	RM1350SL	69-1/8"	63"
DMA4064	57-3/4"	56"			

B1 = Roof vent and lower side vent / **B2** = Upper and lower side vent

➤ Measure the ventilation height from the seam between the frame and the door of the lower side wall vent, to the top of the roof opening (B1), or to the top of the uppermost row of louvers on the upper side wall vent (B2).

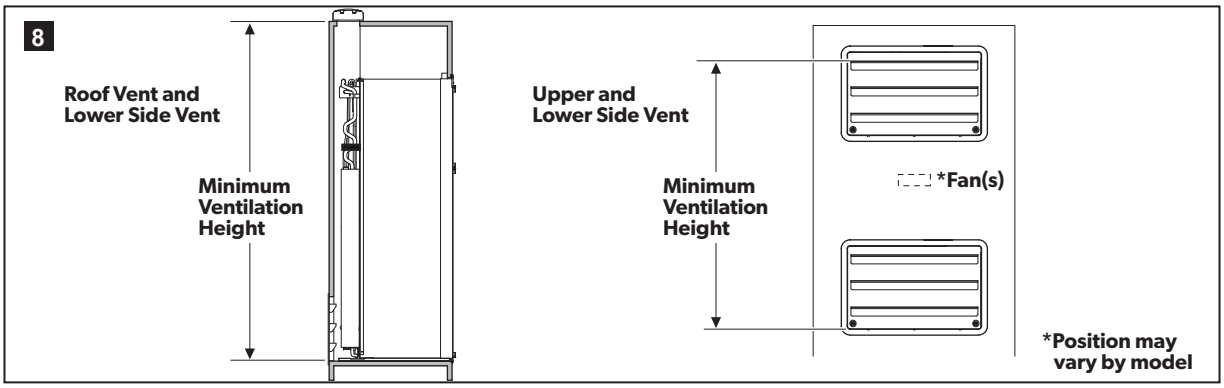

4.5 Approved Vents

	Roof Vent Application		
Model	**Roof Vent**	**Lower Side Vent**	**Fan**
RM2351	3311236.xxx^	3316941.xxx^	3108705.751†
RM2354	3311236.xxx^	3316941.xxx^	3108705.751†
RM2451	3311236.xxx^	3316941.xxx^	3108705.751†
RM2454	3311236.xxx^	3316941.xxx^	3108705.751†
RM2551	3311236.xxx^	3316941.xxx^	3108705.751†
RM2554	3311236.xxx^	3316941.xxx^	3108705.751†
DM2672	3311236.xxx^	3316941.xxx^	3108705.744†
DM2682	3311236.xxx^	3316941.xxx^	3108705.744†
DM2683	3311236.xxx^	3316941.xxx^	3108705.744†
DMA4061	3311236.xxx^	3316941.xxx^	3108705.744†
DMA4064	3311236.xxx^	3316941.xxx^	3108705.744†
DMA4067	3311236.xxx^	3316941.xxx^	3108705.744†
DMA4068	3311236.xxx^	3316941.xxx^	3108705.744†
DM2872	3311236.xxx^	3316941.xxx^	3108705.744†
DM2882	3311236.xxx^	3316941.xxx^	3108705.744†
DMA4081	3311236.xxx^	3316941.xxx^	3108705.744†
DMA4084	3311236.xxx^	3316941.xxx^	3108705.744†
DMA4087	3311236.xxx^	3316941.xxx^	3108705.744†
RM3762	3311236.xxx^	3316941.xxx^	3108705.744†
RM3962	3311236.xxx^	3316941.xxx^	3108705.744†
RM1350	3311236.xxx^	3317027.xxx^	•
RM1350SL	3311236.xxx^	3109349.xxx^, 3316941.xxx^, 3317027.xxx^	•

* Optional vents may be used in applications where the preferred vent cannot be used.

† Optional fan. Note that some models can be purchased with factory installed fan(s).

• Fan(s) are factory installed on these models.

^ Suffix "xxx" should be replaced by a color code. See "Vent Color Codes" on page 15.

Model	Upper & Lower Side Vent Application		
	Upper Side Vent	Lower Side Vent	Fan
RM2351	3109492.xxx^, 3100451.xxx^*, 80301223XX^*, 3317024.xxx^	3109492.xxx^, 3102364.xxx/80302113XX^*, 3317024.xxx^	3108705.751†
RM2354	3109492.xxx^, 3100451.xxx^*, 80301223XX^*, 3317024.xxx^	3109492.xxx^, 3102364.xxx/80302113XX^*, 3317024.xxx^	3108705.751†
RM2451	3109492.xxx^*, 80301223XX^*, 3316941.xxx^, 3317024.xxx^	3109492.xxx^*, 3102364.xxx/80302113XX^*, 3316941.xxx^, 3317024.xxx^	3108705.751†
RM2454	3109492.xxx^*, 80301223XX^*, 3316941.xxx^, 3317024.xxx^	3109492.xxx^*, 3102364.xxx/80302113XX^*, 3316941.xxx^, 3317024.xxx^	3108705.751†
RM2551	3109492.xxx^*, 80301223XX^*, 3316941.xxx^, 3317024.xxx^	3109492.xxx^*, 3102364.xxx/80302113XX^*, 3316941.xxx^, 3317024.xxx^	3108705.751†
RM2554	3109492.xxx^*, 80301223XX^*, 3316941.xxx^, 3317024.xxx^	3109492.xxx^*, 3102364.xxx/80302113XX^*, 3316941.xxx^, 3317024.xxx^	3108705.751†
DM2652	3316941.xxx^	3316941.xxx^	3108705.744†
DM2662	3316941.xxx^	3316941.xxx^	3108705.744†
DM2663	3316941.xxx^	3316941.xxx^	3108705.744†
DM2672	3316941.xxx^	3316941.xxx^	3108705.744†
DM2682	3316941.xxx^	3316941.xxx^	3108705.744†
DM2683	3316941.xxx^	3316941.xxx^	3108705.744†
DMA4061	3316941.xxx^	3316941.xxx^	3108705.744†
DMA4064	3316941.xxx^	3316941.xxx^	3108705.744†
DMA4067	3316941.xxx^	3316941.xxx^	3108705.744†
DMA4068	3316941.xxx^	3316941.xxx^	3108705.744†
DM2852	3316941.xxx^	3316941.xxx^	3108705.744†
DM2862	3316941.xxx^	3316941.xxx^	3108705.744†
DM2872	3316941.xxx^	3316941.xxx^	3108705.744†
DM2882	3316941.xxx^	3316941.xxx^	3108705.744†
DMA4081	3316941.xxx^	3316941.xxx^	3108705.744†
DMA4084	3316941.xxx^	3316941.xxx^	3108705.744†
DMA4087	3316941.xxx^	3316941.xxx^	3108705.744†

Model	Upper & Lower Side Vent Application		
	Upper Side Vent	Lower Side Vent	Fan
RM3762	3316941.xxx^	3316941.xxx^	3108705.744†
RM3962	3316941.xxx^	3316941.xxx^	3108705.744†
RM1350	3109349.xxx^, 3317027.xxx^	3109349.xxx^, 3317027.xxx^	•
RM1350SL	3109349.xxx^, 3316941.xxx^, 3317027.xxx^	3109349.xxx^, 3316941.xxx^, 3317027.xxx^	•

* Optional vents may be used in applications where the preferred vent cannot be used.

† Optional fan. Note that some models can be purchased with factory installed fan(s).

• Fan(s) are factory installed on these models.

^ Suffix "xxx" should be replaced by a color code. See "Vent Color Codes" on page 15.

Model	Corner Application			
	Roof Vent	Upper Side Vent	Lower Side Vent	Fan
RM2351	3311236.xxx^	3109492.xxx^, 80301223xx^†, 3317024.xxx^	3109492.xxx^, 3102364.xxx/80302113xx^†, 3317024.xxx^	3108705.751
RM2354	3311236.xxx^	3109492.xxx^, 80301223xx^†, 3317024.xxx^	3109492.xxx^, 3102364.xxx/80302113xx^†, 3317024.xxx^	3108705.751
RM2451	3311236.xxx^	3109492.xxx^*, 80301223xx^*, 3316941.xxx^, 3317024.xxx^	3109492.xxx^*, 3102364.xxx/80302113xx^*, 3316941.xxx^, 3317024.xxx^	3108705.751
RM2454	3311236.xxx^	3109492.xxx^*, 80301223xx^*, 3316941.xxx^, 3317024.xxx^	3109492.xxx^*, 3102364.xxx/80302113xx^*, 3316941.xxx^, 3317024.xxx^	3108705.751
RM2551	3311236.xxx^	3109492.xxx^*, 80301223xx^*, 3316941.xxx^, 3317024.xxx^	3109492.xxx^*, 3102364.xxx/80302113xx^*, 3316941.xxx^, 3317024.xxx^	3108705.751
RM2554	3311236.xxx^	3109492.xxx^*, 80301223xx^*, 3316941.xxx^, 3317024.xxx^	3109492.xxx^*, 3102364.xxx/80302113xx^*, 3316941.xxx^, 3317024.xxx^	3108705.751
DM2652	3311236.xxx^	3316941.xxx^	3316941.xxx^	3108705.744†
DM2662	3311236.xxx^	3316941.xxx^	3316941.xxx^	3108705.744†
DM2663	3311236.xxx^	3316941.xxx^	3316941.xxx^	3108705.744†
DM2672	3311236.xxx^	3316941.xxx^	3316941.xxx^	3108705.744†
DM2682	3311236.xxx^	3316941.xxx^	3316941.xxx^	3108705.744†
DM2683	3311236.xxx^	3316941.xxx^	3316941.xxx^	3108705.744†
DMA4061	3311236.xxx^	3316941.xxx^	3316941.xxx^	3108705.744†
DMA4064	3311236.xxx^	3316941.xxx^	3316941.xxx^	3108705.744†
DMA4067	3311236.xxx^	3316941.xxx^	3316941.xxx^	3108705.744†
DMA4068	3311236.xxx^	3316941.xxx^	3316941.xxx^	3108705.744†
DM2852	3311236.xxx^	3316941.xxx^	3316941.xxx^	3108705.744†

Model	Corner Application			
	Roof Vent	Upper Side Vent	Lower Side Vent	Fan
DM2862	3311236.xxx^	3316941.xxx^	3316941.xxx^	3108705.744†
DM2872	3311236.xxx^	3316941.xxx^	3316941.xxx^	3108705.744†
DM2882	3311236.xxx^	3316941.xxx^	3316941.xxx^	3108705.744†
DMA4081	3311236.xxx^	3316941.xxx^	3316941.xxx^	3108705.744†
DMA4084	3311236.xxx^	3316941.xxx^	3316941.xxx^	3108705.744†
DMA4087	3311236.xxx^	3316941.xxx^	3316941.xxx^	3108705.744†
RM3762	3311236.xxx^	3316941.xxx^	3316941.xxx^	3108705.744†
RM3962	3311236.xxx^	3316941.xxx^	3316941.xxx^	3108705.744†
RM1350	3311236.xxx^	3109349.xxx^, 3317027.xxx^	3109349.xxx^, 3317027.xxx^	•
RM1350SL	3311236.xxx^	3109349.xxx^, 3316941.xxx^, 3317027.xxx^	3109349.xxx^, 3316941.xxx^, 3317027.xxx^	•

* Optional vents may be used in applications where the preferred vent cannot be used.

† Optional fan. Note that some models can be purchased with factory installed fan(s).

• Fan(s) are factory installed on these models.

^ Suffix "xxx" should be replaced by a color code. See "Vent Color Codes" on page 15.

Model	Island Application	
	Roof Vent	Fan
RM2351	3311236.xxx^	3108705.751
RM2354	3311236.xxx^	3108705.751
RM2451	3311236.xxx^	3108705.751
RM2454	3311236.xxx^	3108705.751
RM2551	3311236.xxx^	3108705.751
RM2554	3311236.xxx^	3108705.751
DM2652	3311236.xxx^	3108705.744†
DM2662	3311236.xxx^	3108705.744†
DM2663	3311236.xxx^	3108705.744†
DM2672	3311236.xxx^	3108705.744†
DM2682	3311236.xxx^	3108705.744†
DM2683	3311236.xxx^	3108705.744†
DMA4061	3311236.xxx^	3108705.744†
DMA4064	3311236.xxx^	3108705.744†
DMA4067	3311236.xxx^	3108705.744†
DMA4068	3311236.xxx^	3108705.744†
DM2852	3311236.xxx^	3108705.744†
DM2862	3311236.xxx^	3108705.744†

	Island Application	
Model	**Roof Vent**	**Fan**
DM2872	3311236.xxx^	3108705.744†
DM2882	3311236.xxx^	3108705.744†
DMA4081	3311236.xxx^	3108705.744†
DMA4084	3311236.xxx^	3108705.744†
DMA4087	3311236.xxx^	3108705.744†
RM3762	3311236.xxx^	3108705.744†
RM3962	3311236.xxx^	3108705.744†
RM1350	3311236.xxx^	•
RM1350SL	3311236.xxx^	•

* Optional vents may be used in applications where the preferred vent cannot be used.

† Optional fan. Note that some models can be purchased with factory installed fan(s).

• Fan(s) are factory installed on these models.

^ Suffix "xxx" should be replaced by a color code. See "Vent Color Codes" on page 15.

Vent Color Codes

Side Vents	Black	White	Tan	Ivory
3109429.XXX	3109492.004	3109492.003	N/A	N/A
3109349.XXX	3109349.065	3109349.005	N/A	N/A
3316941.XXX	3316941.000	3316941.010	3316941.020	3316941.030
3317024.XXX	3317024.000	3317024.010	3317024.020	3317024.030
3317027.XXX	3317027.000	3317027.010	3317027.020	3317027.030
3102364.XXX	N/A	3102364.019	N/A	N/A
80302113XX	N/A	8030211322	N/A	N/A
80301223XX	N/A	8030122320	N/A	N/A
3100451.XXX	N/A	3100451.024	N/A	N/A

Roof Vents	Black	White
3311236.XXX	3311236.024	3311236.000

Other colors may be available for replacement upon request.

5 PREPARE FOR INSTALLATION

⚠WARNING FIRE OR EXPLOSION HAZARD. Failure to obey the following warnings could result in serious injury or death:

- Turn off LP gas supply at the tank.
- Never use an open flame to check for gas leaks.

5.1 Removing the Existing Refrigerator

Proceed to "5.2 Preparing the Refrigerator Enclosure" if a refrigerator is not already present.

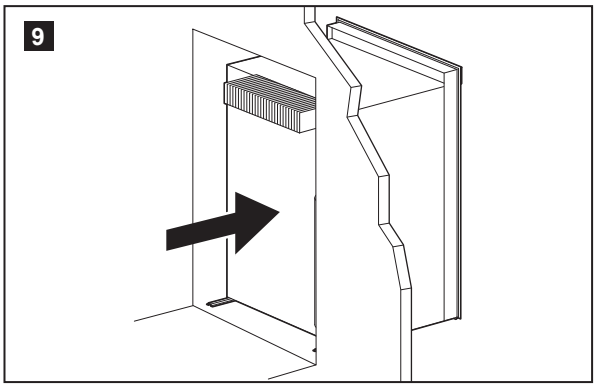

➤ Unplug the 120 VAC power cord from the receptacle at the rear of the refrigerator enclosure.

➤ Disconnect the 12 VDC leads from the refrigerator and cap the lead ends.

➤ Turn off the LP gas supply to the refrigerator.

➤ Disconnect the LP gas line from the refrigerator. Cap the line and verify there are no LP gas leaks

➤ Remove the screws anchoring the refrigerator to the enclosure.

➤ Slide the refrigerator out of the enclosure and remove it from the RV.

5.2 Preparing the Refrigerator Enclosure

Inspecting the refrigerator enclosure

➤ Verify the following to inspect the refrigerator enclosure:

- There are no holes, other than ventilation holes, inside the enclosure.
- The surface for sealing strips is clean and flat to allow a complete seal.
- No objects are protruding into the enclosure, except utility connections for the refrigerator.
- The enclosure seams are sealed to prevent flue gases from leaking into the living area.
- Utility hookups are present and comply with all applicable codes.

Assembling the refrigerator enclosure

➤ Ensure the following when assembling the refrigerator enclosure:

- The refrigerator must be level and installed in a sturdy enclosure.
- The floor must be level and able to support the weight of the refrigerator and its contents.
- Adjacent heat sources must **not** affect the ventilation of the refrigerator.
- All joints in the enclosure must be sealed to prevent flue gases from leaking into the living area.
- The enclosure must be free of materials that may damage the refrigerator.
- A wood strip must be placed above the upper opening of the enclosure. The top frame of the refrigerator is anchored to the wood strip with screws.
- The refrigerator must **not** be installed directly on carpeting.

5.3 Choosing the Type of Vent Application

➤ Read **before** proceeding:

- Certified installation requires one lower fresh air intake vent and one upper exhaust vent.
- Center the vents to the back of the refrigerator. See "Offset vent application" on page 17 if it is not possible to center the vent.
- Use only the Dometic vents specified for the installation.
- Ensure that vent openings are clear of obstructions.
- Ensure that the lower vent opening is even with, or below, floor level to allow any raw LP gas to escape.
- Do **not** allow the floor to block or interfere with the vent openings.
- Additional holes are required for vents installed above floor level to vent raw LP gas outdoors. The holes must be a diameter of 1-3/4", clear of any obstruction, and covered with a screen (minimum 14 X 14 per inch).

Roof vent application

- This application is recommended for typical installations.
- This application can be used if the vents are inboard or offset due to a radius roof or interference with building materials.

➤ Check the enclosure depth and add a baffle, if required.

Upper and lower side vent application

- Choose this type of installation when a roof vent installation is not possible.
- A baffle should be added.
- The refrigerator must be equipped with fan(s).

Island application

- This application is intended for refrigerators installed on an inside wall and must be vented through the floor to the ceiling.

Corner application

- This application is intended for refrigerators installed in the rear corner of the vehicle or in an angled cabinet.
- The refrigerator must be equipped with fan(s).

Offset vent application

- The vents must always be offset toward the flue side of the cooling unit.
- For offset vent applications, prior written approval and safety certification must be obtained from Dometic Corporation.

5.4 Installing the Vent Application

⚠WARNING FIRE OR EXPLOSION HAZARD. Make sure vent allows raw (unburned) LP Gas to escape to the outside. LP Gas is heavier than air, and will collect at floor level if not vented correctly. Failure to obey this warning could result in death or serious injury.

➤ Read **before** proceeding:

- Use the inboard installation option when the radius of the roof, or the presence of building materials, interferes with the placement of the roof vent.
- All fasteners are to be provided by the installer.
- Select the appropriate screw types for the application for which they are being used.
- Minimize screw lengths to fit applications appropriately, unless otherwise noted.
- Rivets are acceptable only where noted.

➤ Apply sealant around the thread or rivet body of all fasteners.

➤ Apply dry sealant around the surface mounting face of all vent frames or vent bases **before** installation.

➤ Apply wet sealant around the perimeter of all vent frames or vent bases **after** installation. Do not allow the sealant to block the molded weep tracks in the vent frame.

Roof vent application

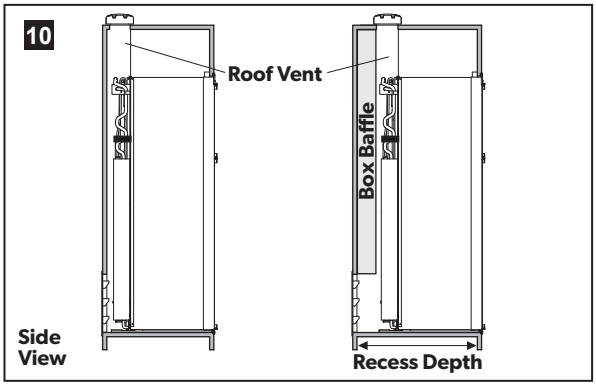

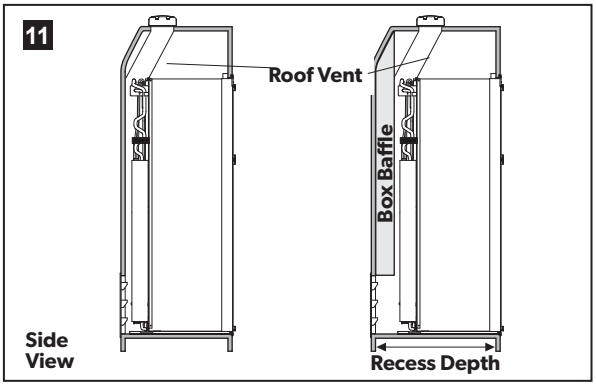

Plastic roof vent (No. 3311236.xxx)

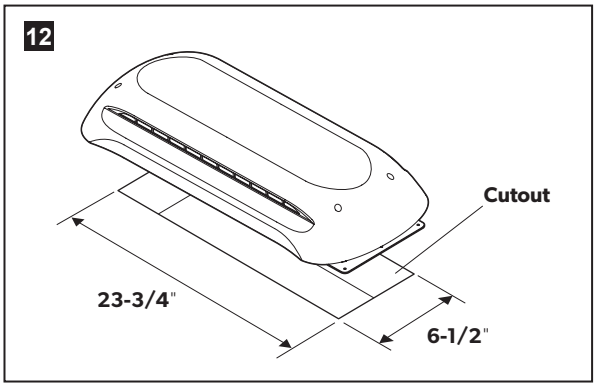

- ➤ Confirm ventilation height. See "4.4 Minimum Ventilation Heights" on page 10.
- ➤ Confirm the recess depth. See "5.5 Recess Depth" on page 23.
- ➤ Install a box baffle, if required.
- ➤ Install the lower side vent. See "Side vents" on page 20.
- ➤ Center the roof vent base over the cutout.
- ➤ Secure the roof vent base using sixteen #10 screws (not provided).
- ➤ Place the cap on top of the base.
- ➤ Secure the cap to base using four #10 screws (not provided). The screws must be a minimum of 1-1/4".
- ➤ Apply sealant over all the screws.

Upper and lower side application

- ➤ Confirm ventilation height. See "4.4 Minimum Ventilation Heights" on page 10.
- ➤ Confirm the recess depth. See "5.5 Recess Depth" on page 23.
- ➤ Install a box baffle above the lower access vent, if required.
- ➤ Install the lower side vent.
- ➤ Install the upper side vent.

See "Side vents" on page 20 for specific instructions on installing the side vents.

Side vents

Upper Metal Side Vent (No. 3100451.xxx)

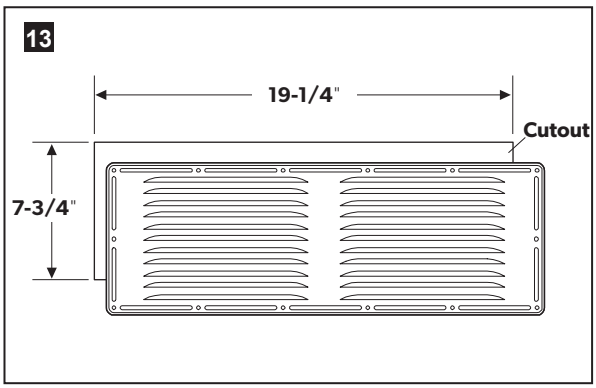

- Place the vent over the cutout.
- Secure the frame using fourteen #10 screws (not provided).

Rivets could be used for this vent.

Upper Metal Side Vent (No. 80301223xx)

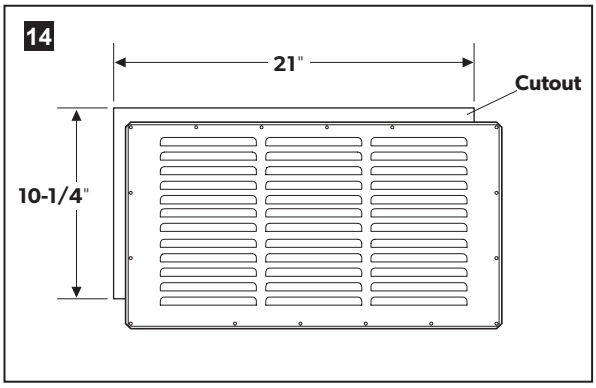

- Place the vent over the cutout.
- Secure the frame using sixteen #10 screws (not provided).

Rivets could be used for this vent.

Lower Metal Side Vent (No. 3102364.xxx, 80302113xx)

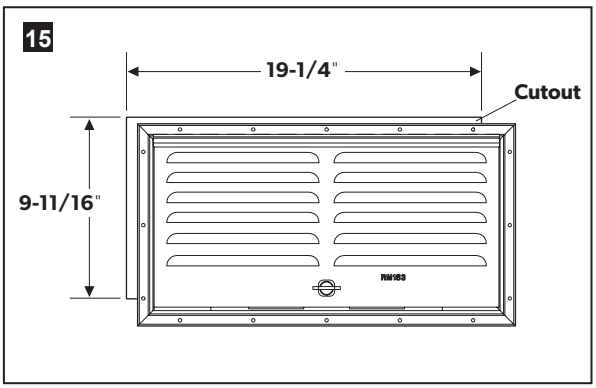

- Place the vent over the cutout.
- Secure the frame using sixteen #10 screws (not provided).

Rivets could be used for this vent.

Upper and Lower Plastic Side-By-Side Vent (No. 3109349.xxx)

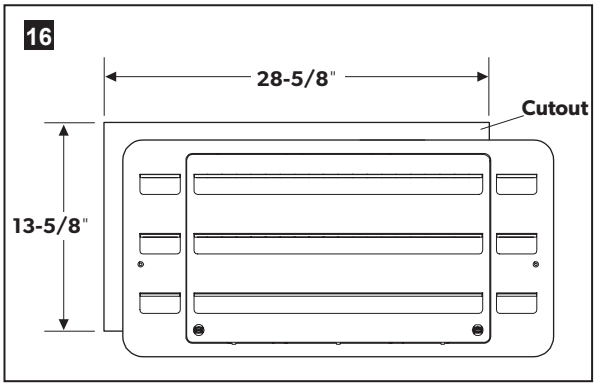

- Place the frame into the cutout.
- Secure the frame with five Z-brackets.
- Install six #10 screws (three on each end, not provided) to completely secure the frame.
- Remove the screw cap plugs from the vent frame and install them over the six screws in the front frame.
- Install the vent door into the frame using the upper tabs as a guide.
- Lock the vent door into place by fully seating and twisting the black latches in the bottom corners of the vent door.

Upper and Lower Plastic Side Vent (No. 3109492.xxx)

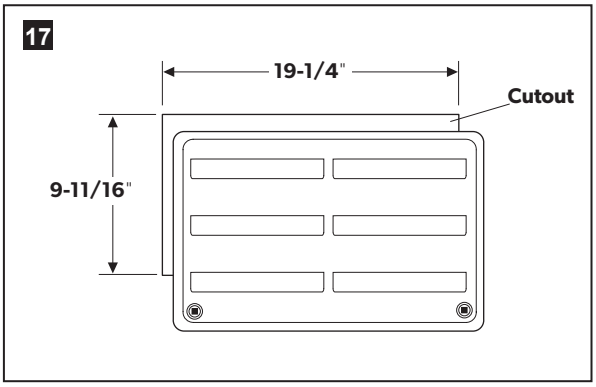

- Place the frame into the cutout.
- Secure the frame with seven Z-brackets using #10 screws (not provided).
- Install the vent door into the frame using the upper tabs as a guide.
- Lock the vent door into place by fully seating and twisting the black latches in the bottom corners of the vent door.

Upper and Lower Plastic Side Vent (No. 3316941.xxx)

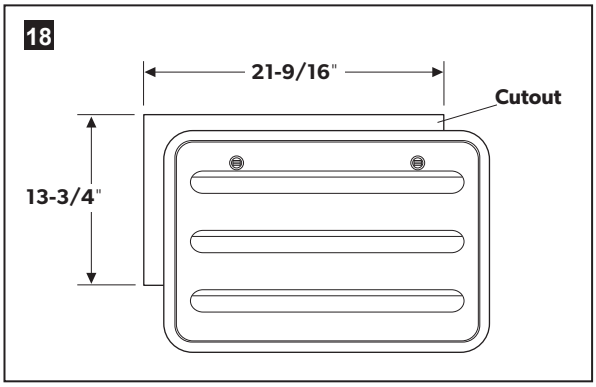

- Place the frame into the cutout.
- Secure the frame using sixteen #10 screws (not provided) through the inside flange of the frame.
- Install the vent door into the frame using the lower tabs as a guide.
- Lock the vent door into place by fully seating and twisting the latches in the top corners of the vent door.

Upper and Lower Plastic Side Vent (No. 3317027.xxx)

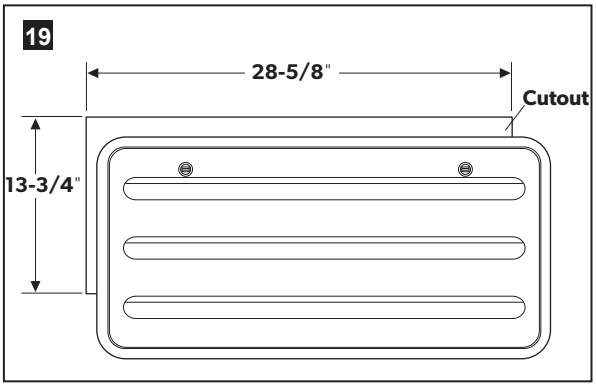

- Place the frame into the cutout.
- Secure the frame using sixteen #10 screws (not provided) through the inside flange of the frame.
- Install the vent door into the frame using the lower tabs as a guide.
- Lock the vent door into place by fully seating and twisting the latches in the top corners of the vent door.

Upper and Lower Plastic Side Vent (No. 3317024.xxx)

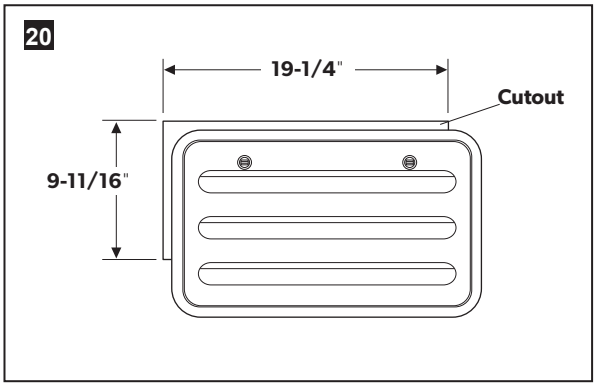

- Place the frame into the cutout.
- Secure the frame using sixteen #10 screws (not provided) through the inside flange of the frame.
- Install the vent door into the frame using the lower tabs as a guide.
- Lock the vent door into place by fully seating and twisting the latches in the top corners of the vent door.

Fan (Innovator Refrigerator Ventilation System*) (No. 3108705.751, 3108705.744)

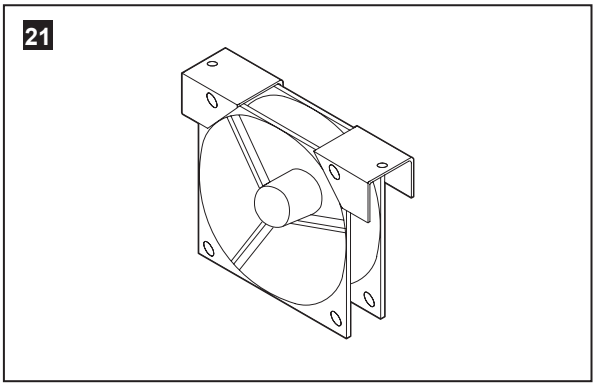

*Patent #5,355,693

Z-Bracket (No. 3103812.xxx)

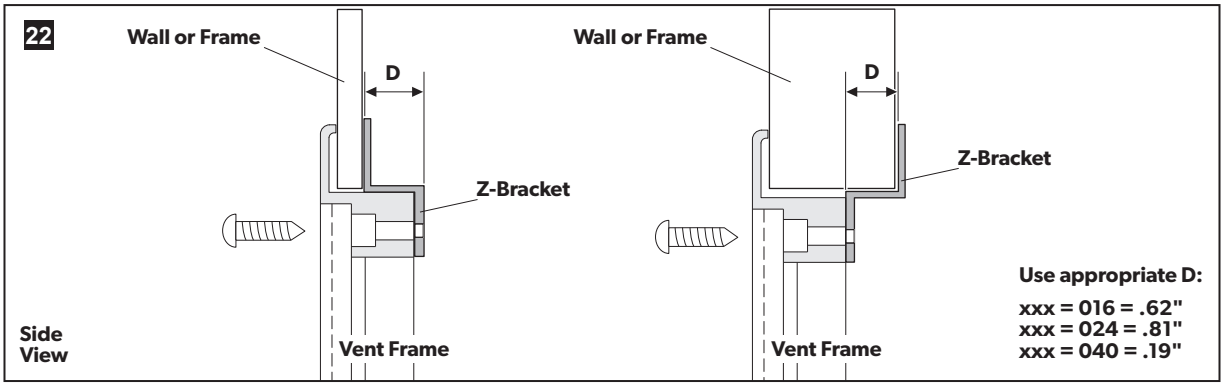

5.5 Recess Depth

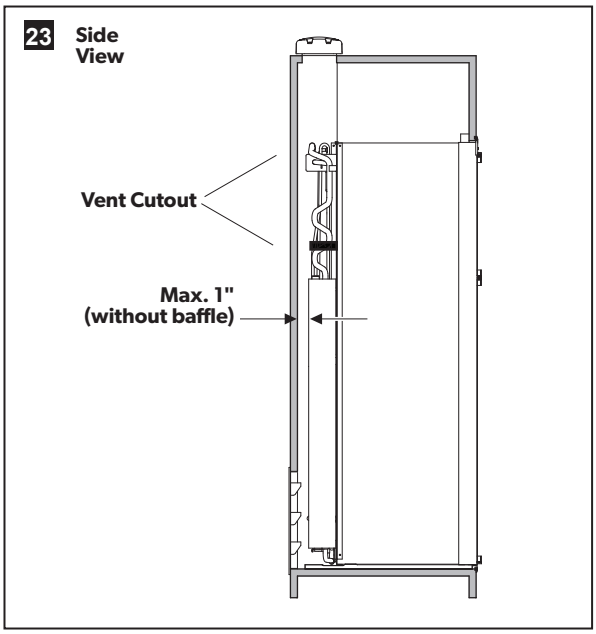

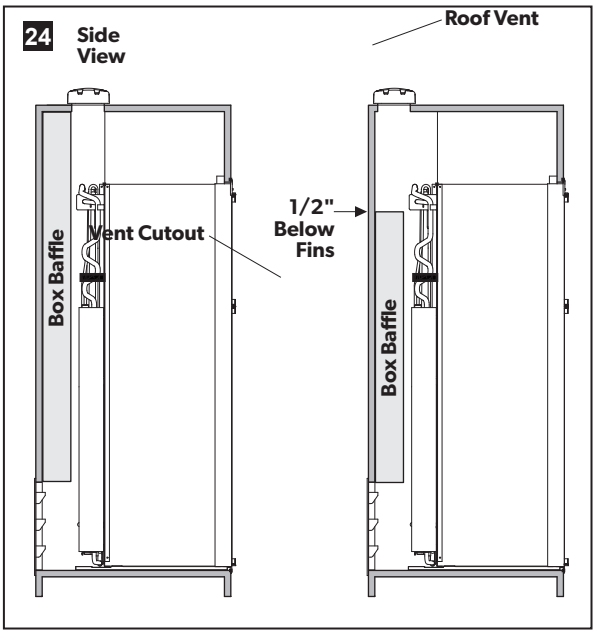

Island application

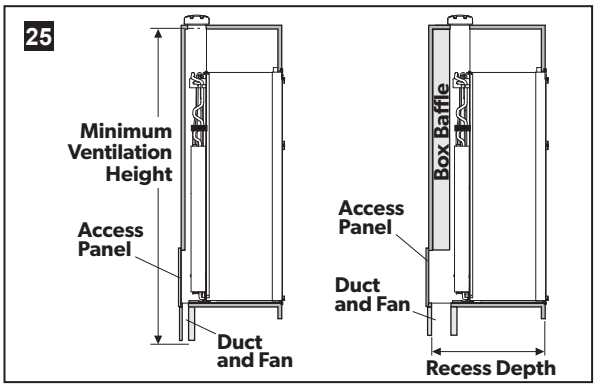

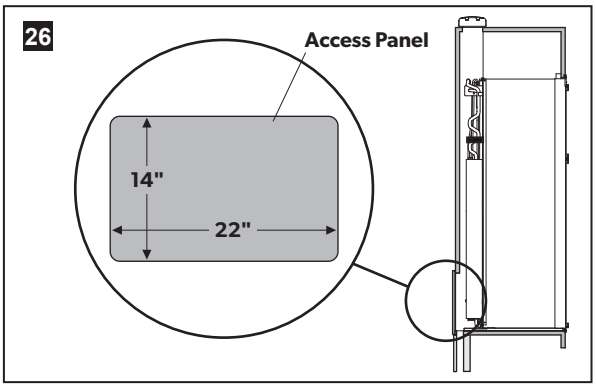

- ➤ Confirm the ventilation height. See "4.4 Minimum Ventilation Heights" on page 10.
- ➤ Confirm the recess depth. See "5.5 Recess Depth" above.
- ➤ Install a box baffle above the lower access panel, if required.

- ➤ Install the access panel.

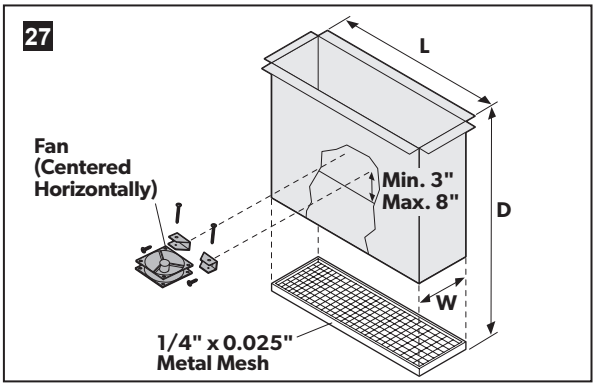

- ➤ Install the air duct.
- ➤ Install the roof vent. Refer to "Roof vent application" on page 18.

Corner application with roof vent

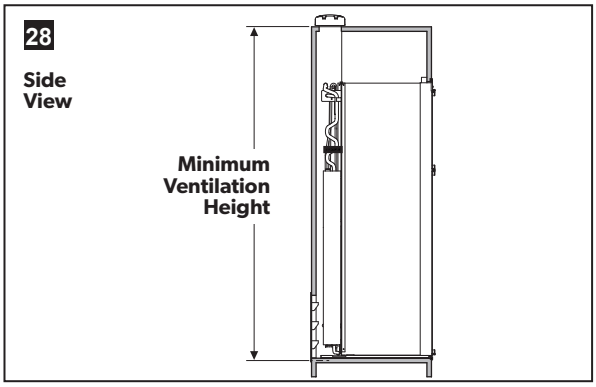

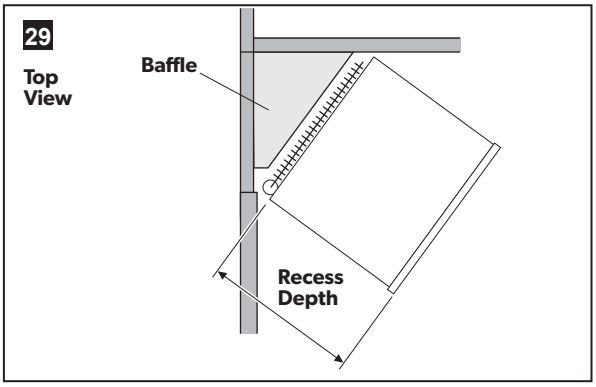

- Confirm the ventilation height. See "4.4 Minimum Ventilation Heights" on page 10.
- Confirm the recess depth. See "5.5 Recess Depth" on page 23.
- Install the lower side vent. See "Side vents" on page 20.
- Install the roof vent. See "Roof vent application" on page 18.

Corner application with upper and lower side vents

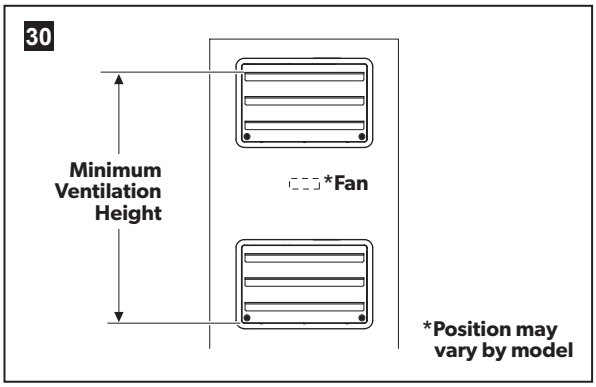

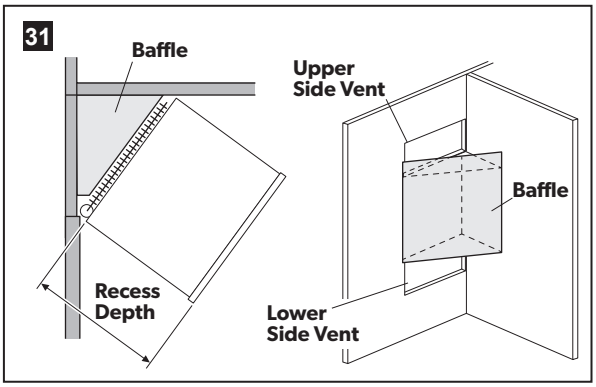

- Confirm the ventilation height. See to "4.4 Minimum Ventilation Heights" on page 10.
- Confirm the recess depth. See "5.5 Recess Depth" on page 23.
- Install the lower side vent. See to "Side vents" on page 20.
- Install the upper side vent. See to "Side vents" on page 20.

Offset vent - upper and lower side vent

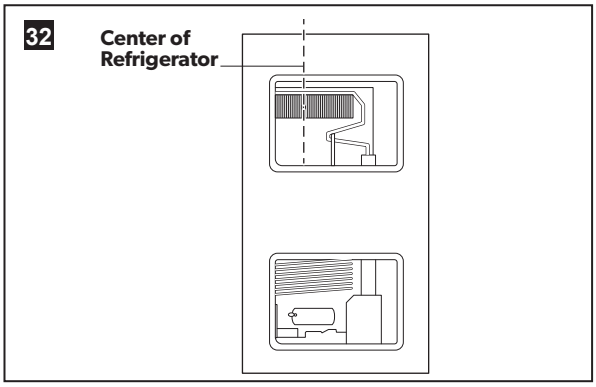

Offset vent - side and roof vent

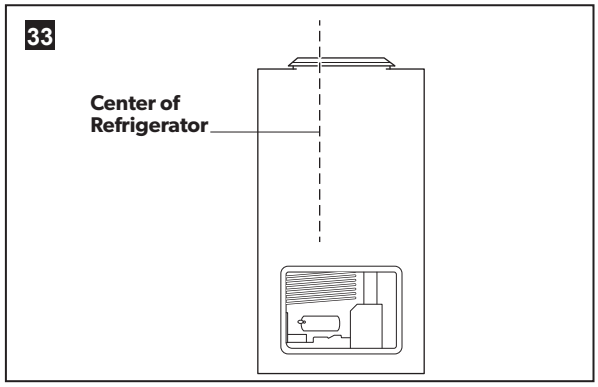

Prior written approval and safety certification must be obtained from Dometic Corporation for this application.

➤ Confirm the ventilation height. See "4.4 Minimum Ventilation Heights" on page 10.

➤ Confirm the recess depth. See "5.5 Recess Depth" on page 23.

➤ Install the lower side vent. See "Side vents" on page 20.

➤ Install the upper side vent or roof vent. See "Side vents" on page 20, or see "Roof vent application" on page 18.

5.6 Placing the Insulation

➤ Read **before** proceeding:

- Dimensions will vary by model.
- If there is more than 1/4" between the side or top of the refrigerator and the inside of the enclosure, fill the space with insulation, baffles, or other non-flammable fabricated seals.
- Do **not** allow insulation to come into contact with the cooling unit.

➤ Cut the insulation two to three inches shorter than the depth of the enclosure.

➤ Secure the insulation to the enclosure walls and ceiling. This will prevent it from shifting when the refrigerator is installed.

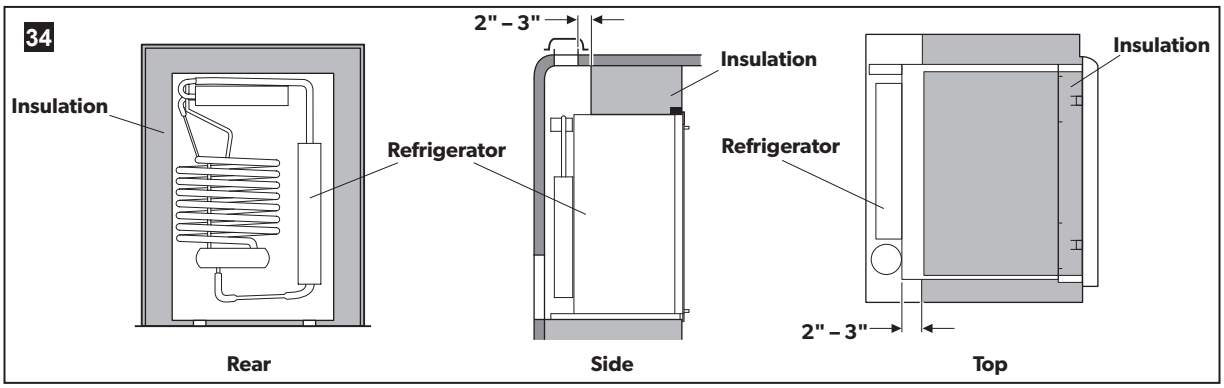

5.7 Connecting the Water Supply

For refrigerator models equipped with ice maker, ice and water dispensers:

- ➤ Ensure that the water supply system has a minimum pressure of 15 pounds per square-inch (psi).
- ➤ Use a 1/4" diameter water line to the water valve at the rear of the refrigerator.
- ➤ Ensure that the water line is equipped with a manual shut-off valve that is easily accessible.

6 INSTALLATION

6.1 Installing the Refrigerator

Refrigerator model RM1350SL is equipped with vacuum-insulated panel technology. The insulating panels are located on the top, back, sides, and doors. If the surface is punctured, the effectiveness of the insulation will be reduced, resulting in poor refrigerator performance.

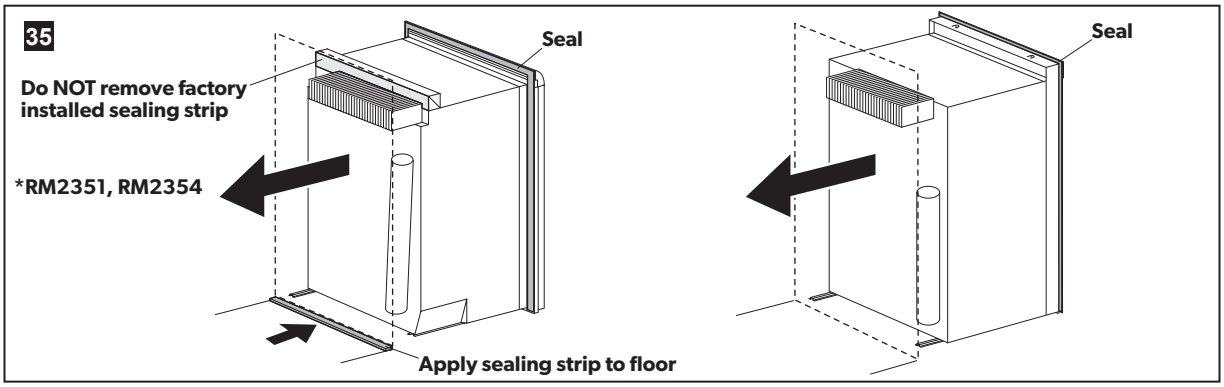

- ➤ Carefully place the refrigerator in the enclosure.
- ➤ Verify that there is a complete seal between the front frame of the refrigerator and the top, sides and bottom of the enclosure.

A length of sealing strip is applied to the rear surface of the front frame of the refrigerator. The sealing strip provides complete isolation of the combustion system from the vehicle interior.

- ➤ **RM2351, RM2354:** Apply a sealing strip to the front edge of the enclosure floor. Do **not** damage the sealing strip when the refrigerator is put in place.

RM2351 & RM2354: Do **not** remove the factory-installed sealing strip at the top rear corner of the cabinet. It is **not** part of the shipping materials and must be left intact.

6.2 Securing the Refrigerator

The following steps must be completed in order to prevent leakage between the refrigerator and the enclosure.

RM2351, RM2354

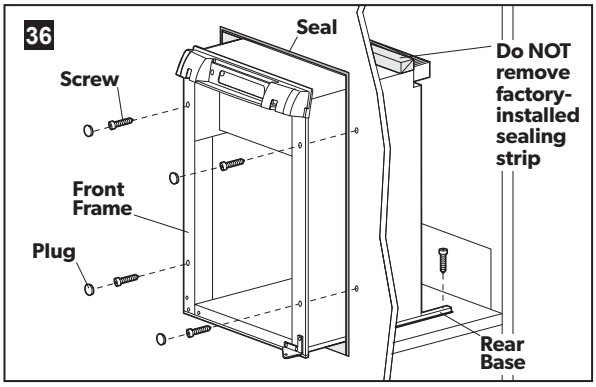

- Install four screws (not provided) through the front frame.
- Install one screw (not provided) in the rear base.
- Cover the screw heads using the plugs provided.

RM2451, RM2454, RM2551, RM2554, DM2652,DM2662, DM2663, DM2852, DM2862

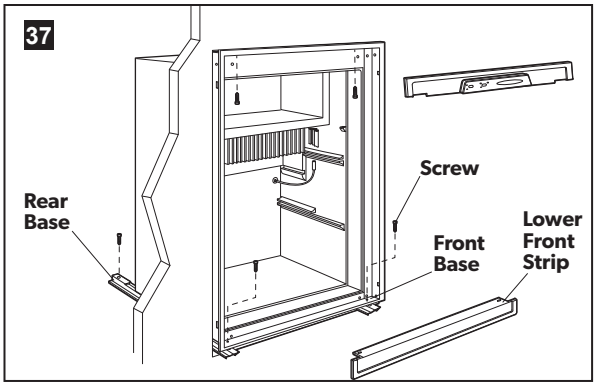

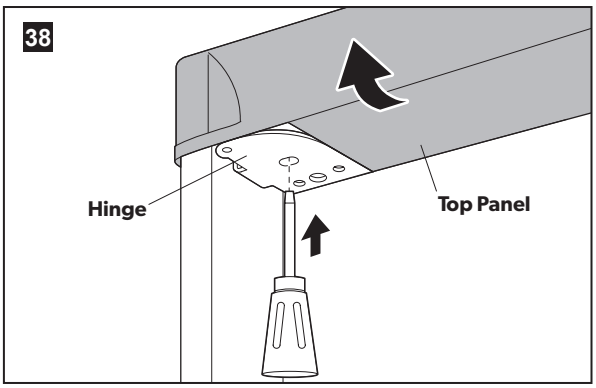

- Install the lower front strip by sliding it under the bottom hinge plate. Refer to "6.3 Installing the Hinge Plate" on page 31.
- Secure the refrigerator and the lower front strip using two screws (not provided).

- Gently remove the tabs from the hole in the hinge plate, on both sides, using a flat-bladed screwdriver.
- Tilt the top decoration panel and lift to remove it from the top frame. Do **not** damage the circuit board and wires.
- Install two screws (not provided) in the top frame.
- Seal the opening for the screws with aluminum tape (not provided).
- Replace the top decoration panel. Do **not** pinch the wires behind the panel.

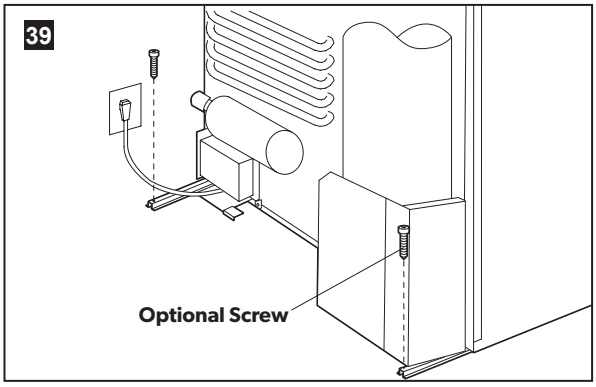

➤ Install one screw (not provided) in the rear base. An optional screw may be added on the opposite side.

DM2672, DM2682, DM2683, DM2872 & DM2882

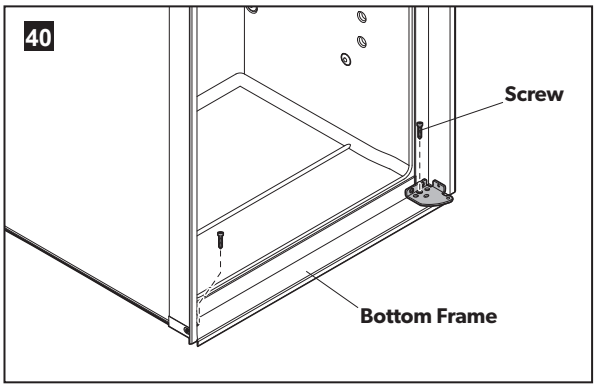

➤ Secure the refrigerator using two screws (not provided) through the bottom frame of the refrigerator.

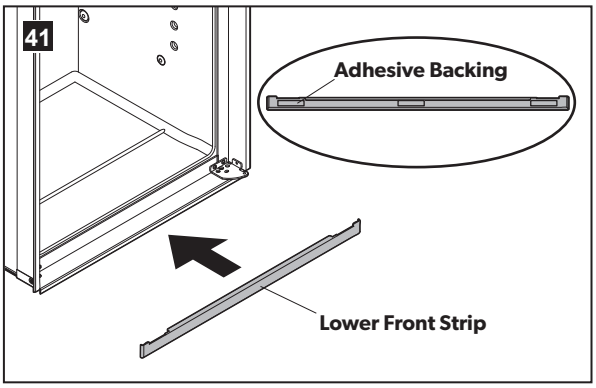

➤ Remove the three pieces of adhesive backing tape from the lower front strip.

➤ Align the lower front strip to the bottom frame and install it by firmly pressing the trim piece to the frame.

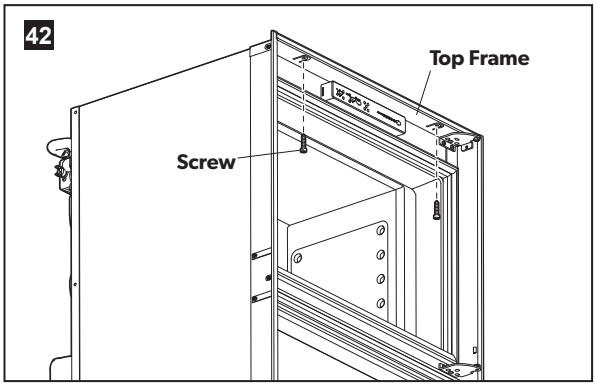

➤ Install two screws (not provided) through the holes underneath the top frame.

➤ Seal the opening for the screws using the black labels provided.

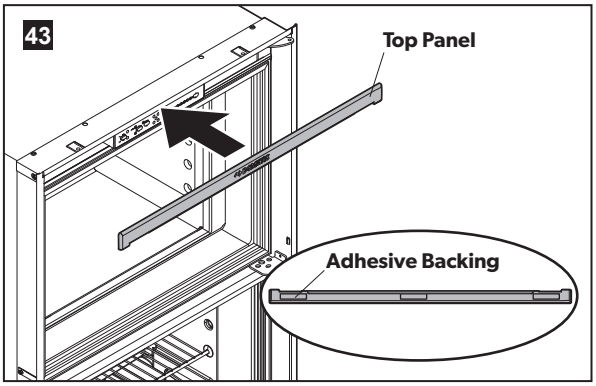

➤ Remove the three pieces of adhesive backing tape from the top decoration panel.

➤ Align the top decoration panel to the top frame and install by firmly pressing the trim piece onto the frame.

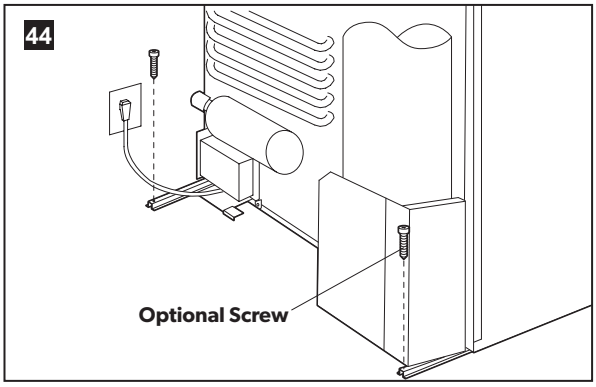

➤ Install one screw (not provided) in the rear base. An optional screw may be added on the opposite side.

RM3762, RM3962

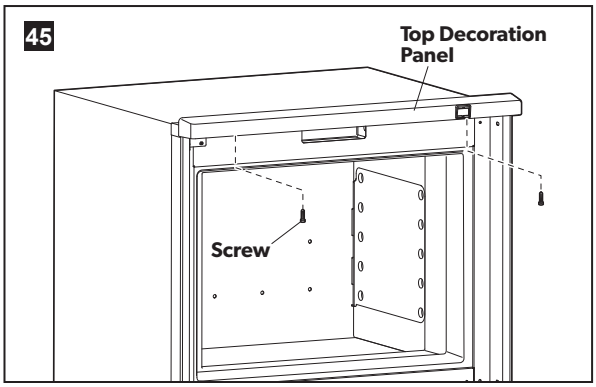

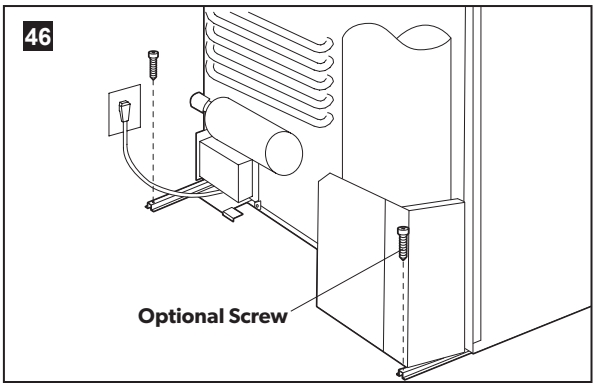

➤ Secure the refrigerator using two screws (not provided) through the holes underneath the top decoration panel.

➤ Seal the openings for the screws on the metal frame using tape or sealant.

➤ Install the lower front strip by sliding it under the bottom hinge plate. See "6.3 Installing the Hinge Plate" on page 31.

➤ Secure the refrigerator and the lower front strip using two screws (not provided).

➤ Install one screw in the rear base. An optional screw may be added on the opposite side.

RM1350, RM1350SL

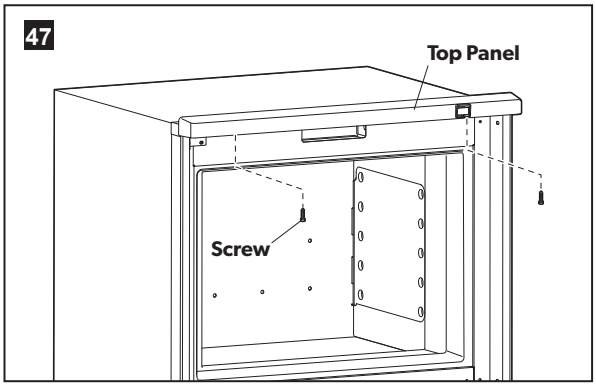

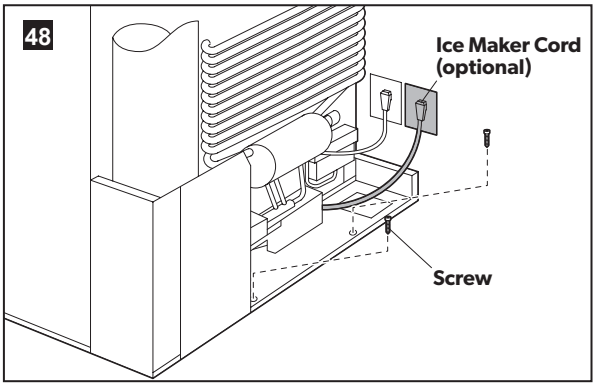

- Secure the refrigerator using two screws (not provided) through the holes underneath the top decoration panel.
- Seal the openings for the screws on the metal frame using tape or sealant.
- Install the lower front strip by sliding it under the bottom hinge plate. See "6.3 Installing the Hinge Plate" on page 31.
- Secure the refrigerator and the lower front strip using two screws (not provided).

- Install one screw (not provided) in the rear base. An optional screw may be added on the opposite side.

DMA4061, DMA4064, DMA4067, DMA4068, DMA4081, DMA4084, & DMA4087

This section describes how to secure the refrigerator in the enclosure.

If the door swing will be reversed, complete the reversal procedure before securing the refrigerator inside the enclosure. See "Reversing the Door Swing" on page 49 for details.

Before securing the refrigerator, ensure the refrigerator is positioned correctly.

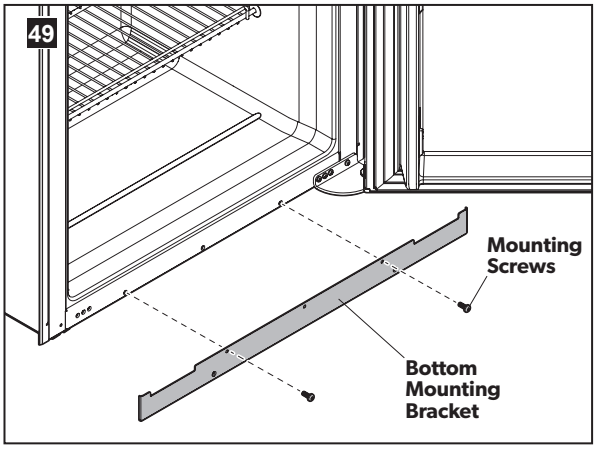

- Open the fresh food door and secure the bottom mounting bracket to the refrigerator using the screws provided.

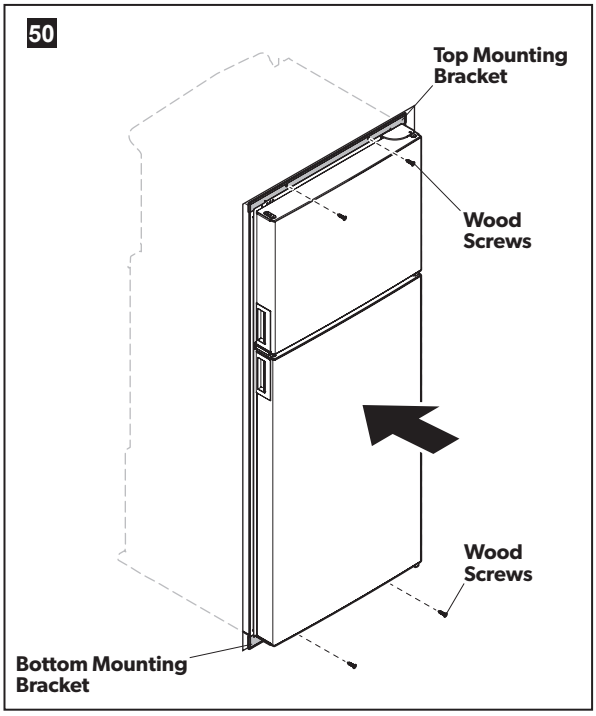

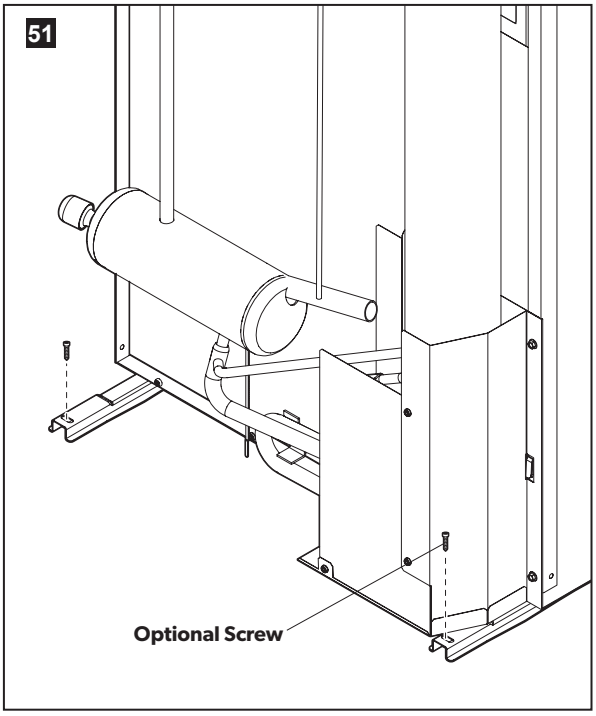

➤ Secure the refrigerator within the enclosure using four wood screws that will go through the top and bottom mounting brackets.

➤ Install one screw (not provided) in the rear base. An optional screw may be added on the opposite side.

6.3 Installing the Hinge Plate

The refrigerator is provided with a lower front strip that is shipped as a loose part.

➤ Attach the front strip after the refrigerator is set into the cutout opening.

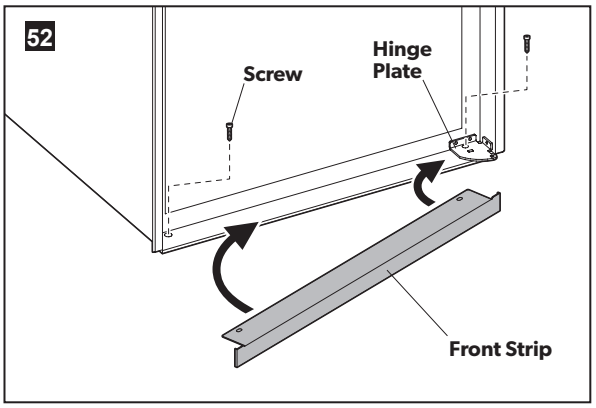

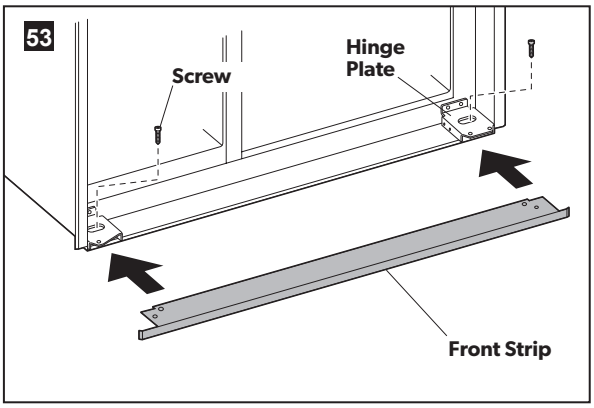

➤ Slide the lower front strip under the bottom hinge plate(s).

➤ Secure the hinge plate(s) and the lower front strip using two screws (not provided).

6.4 Installing the Drain Water Hose

⚠WARNING FIRE HAZARD. Do **not** allow the drain tube to contact the burner assembly or boiler casing. Failure to obey this warning could cause a fire resulting in death or serious injury.

➤ Read **before** proceeding:

- The perforated plug **must** be present at the end of the drain water hose.
- The drain water hose must **not** be kinked or routed uphill.

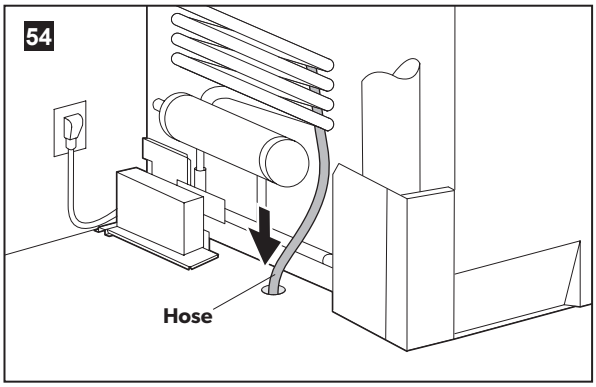

Option 1 - through the floor

➤ Drill a hole through the flooring.

➤ Place sealant around the hole.

➤ Confirm that the supplied hose is long enough.

➤ Supply an extra length of hose, if needed.

Option 2 - through vent frame (plastic vents only)

➤ Pull the end of the hose through the louvers in the vent door.

➤ Cut the hose to length.

➤ Reinstall the perforated plug.

Option 3 - hanging clip (plastic vents only)

➤ Install the clip (not provided, part number 3106559.xxx) during vent installation.

➤ Insert the hose into the "j" portion of clip.

➤ Cut the hose to length.

➤ Reinstall the perforated plug.

➤ Ensure that the hose is positioned to drain into the uppermost row of louvers in the vent door.

Option 4 - through vent door (side-by side plastic vent only)

➤ Drill a 5/8" hole in the vent frame directly above the floor line.

➤ Route the drain hose through the hole and cut it to length.

➤ Reinstall the perforated plug on the outside of the vent frame.

➤ Apply sealant around the plug to ensure water does not seep into the enclosure.

Option 5 – attached to vent frame (3316941.xxx, 3317027.xxx, and 3317024.xxx only)

➤ Remove the perforated plug.

➤ Cut the hose to length.

➤ Push the end of the hose through the attachment feature located on the vent frame.

6.5 Connecting the Gas

⚠WARNING FIRE OR EXPLOSION HAZARD. Failure to obey the following warnings could result in property damage, serious injury, or death:

- Install gas connections in compliance with the applicable supplemental directives listed in this manual. Refer to "1.3 Supplemental Directives" on page 3.
- Never use an open flame to check for gas leaks. Use a commercial leak detection solution to check all connections, as specified in these instructions.
- Should the gas supply fail to shut off or if overheating occurs, shut off the gas valve to the refrigerator before shutting off the electrical supply.
- Do **not** put sealing compound on flair fittings.
- Never use a wire or pin to clear obstructions from burner jet (damage will occur).
- Do **not** attempt to adjust burner jet.

➤ Read **before** proceeding:

- Connection to the gas supply line is accomplished at the manual gas valve. The manual gas valve is furnished with a 3/8" SAE (UNF 5/8" -18) male flare connection.
- The gas supply system must incorporate a pressure regulator to maintain a supply pressure of not more than 11" water column.
- When testing the gas supply system at test pressures:
  - Greater than 1/2 psi, the refrigerator and its individual shutoff valve must be disconnected from the gas supply piping system.
  - 1/2 psi, or less, the refrigerator must be isolated from the gas supply piping system by closing the individual manual shutoff valve.
- If local codes allow for the use of a flexible gas appliance connector, do **not** use a connector that has previously serviced another gas appliance.
- If detailed instructions on the installation and connection to the gas supply are required, contact the nearest dealer or distributor.

➤ Always use two wrenches to hold the valve and flair nut when loosening and tightening gas connections.

➤ Route all connections to avoid contact with the boiler casing, burner cover, or any other refrigerator components.

➤ Perform an air pressure test on the piping system.

➤ Examine all completed connections for leaks using a commercially available soap solution made for the detection of leaks.

RM2351, RM2354

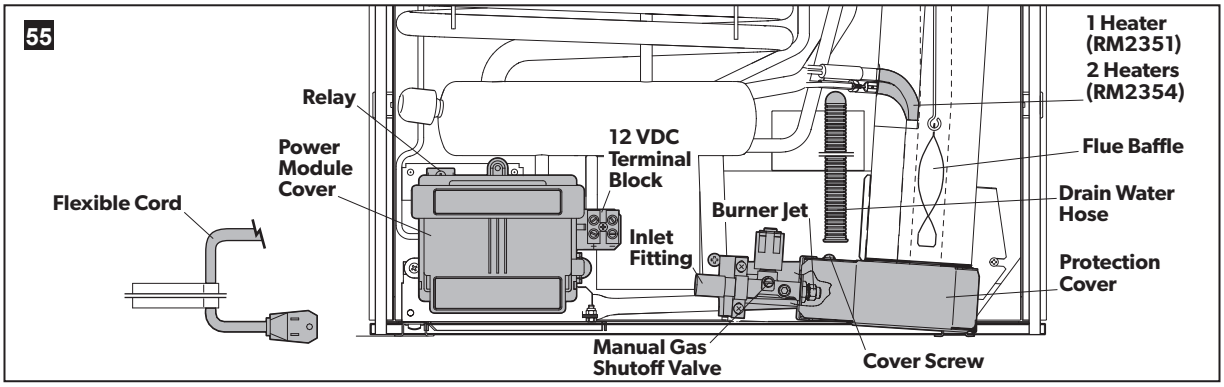

RM2451, RM2454, RM2551, RM2554

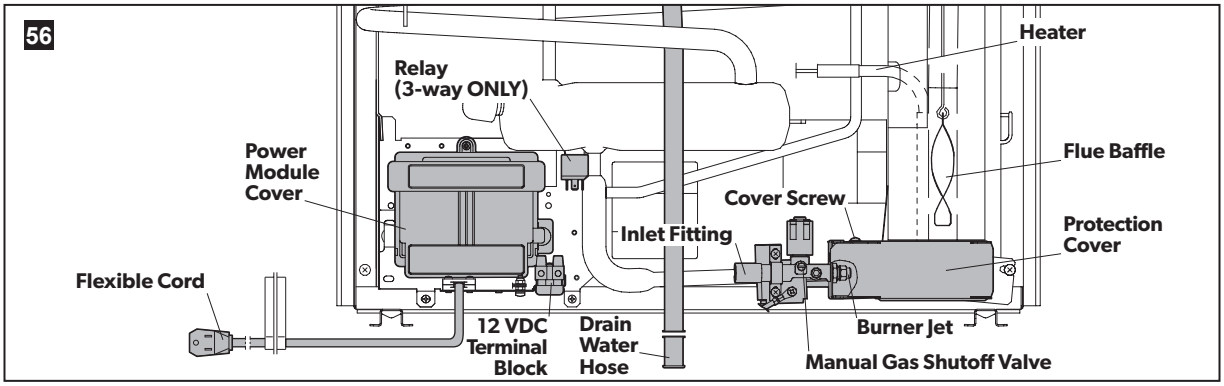

DM2672, DM2682, DM2683, DM2872, DM2882, DM2652, DM2662, DM2663, DM2852, DM2862, DMA4061, DMA4064, DMA4067, DMA4068, DMA4081, DMA4084, DMA4087

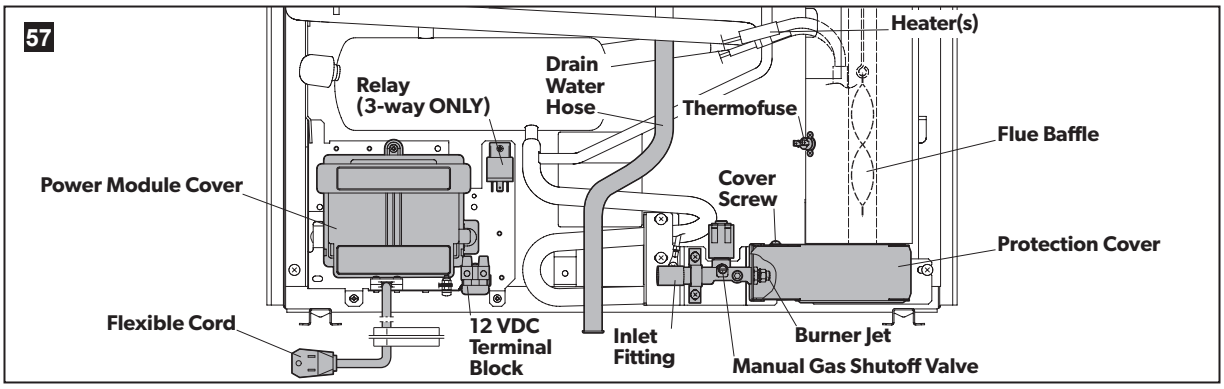

RM3762, RM3962

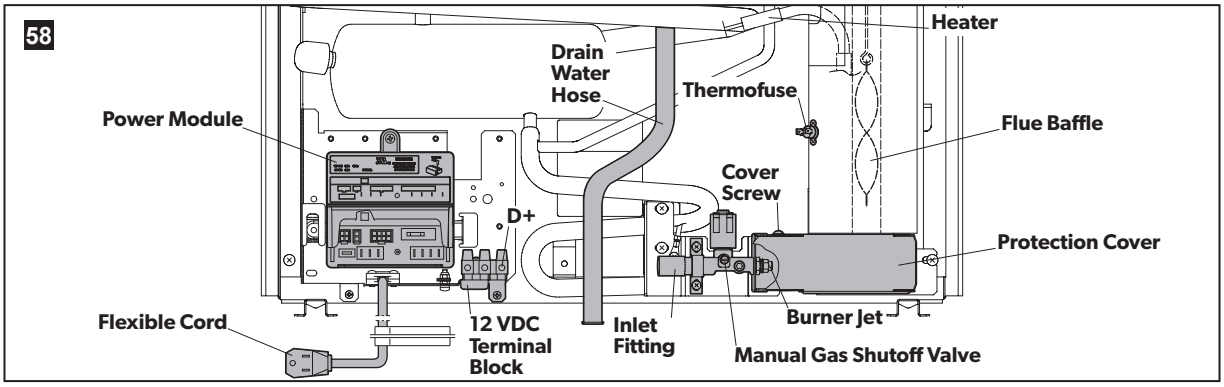

RM1350M, RM1350SLM

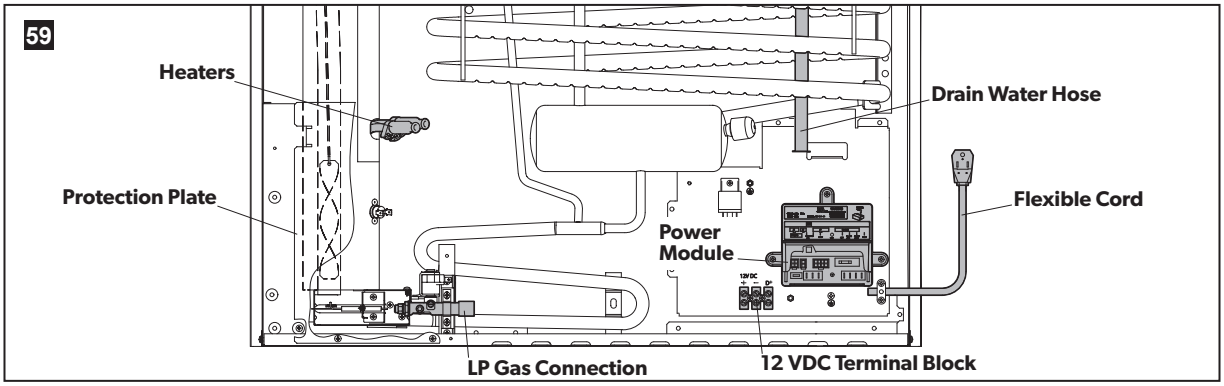

RM1350IM, RM1350MIM, RM1350WIM

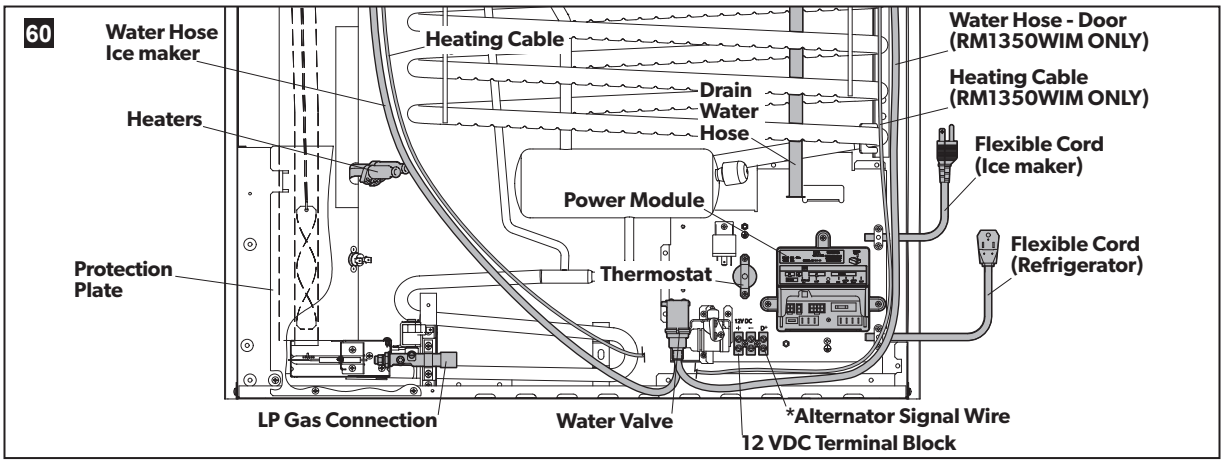

*Valid for refrigerators equipped with the automatic door locking system

RM1350WID

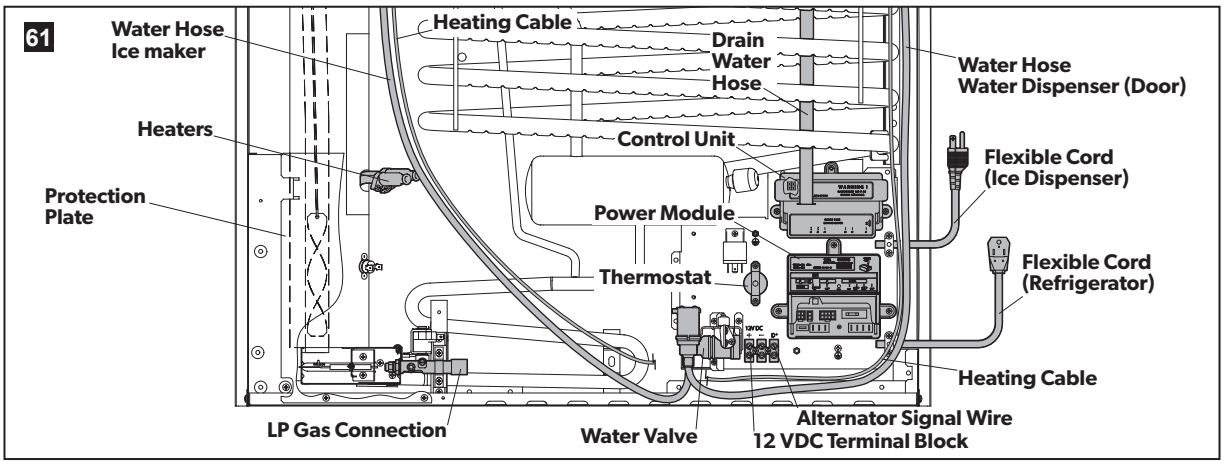

6.6 Connecting the Electrical

120 VAC connection

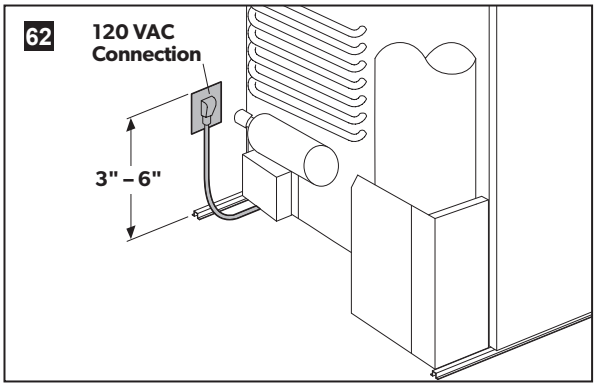

The free length of the cord is 2'.

➤ Install the electrical receptacle on the opposite side of the burner assembly, and 3–6" above the refrigerator, to allow easy access through the vent door.

Alternator (D+) connection

RM3762, RM3962, RM1350 & RM1350SL (with the automatic door locking system)

- The refrigerator requires a signal wire connection from the vehicle's alternator (D+) to maintain temporary gas lock-out function, and the automatic travel door-latch for RM1350 and RM1350SL.
- The gas operation will automatically lock out for 15 minutes when the engine is switched off, to prevent gas operation when stopping at a fuel station.

12 VDC connection

➤ Read **before** proceeding:

- **RM2451, RM2551, DM2652, DM2672, DM2872, DM2852, RM3762, RM3962, RM1350, & RM1350SL** refrigerator models are not designed for 12 VDC operation of the cooling system. However, 12 VDC must be supplied to operate the controls.
- **RM2354, RM2454, RM2554, DM2662, DM2663, DM2682, DM2683, DM2862, & DM2882** refrigerator models require a continuous 12 VDC supply to maintain the automatic energy system.

MAX WIRE LENGTH BASED ON WIRE SIZE

Model	Wire Size (AWG)	Wire Length (Feet)
RM2351, RM2451, RM2551, DM2652, DM2662, DM2672, DM2682, DMA4061, DMA4064, DMA4067, DM2852, DM2862, DM2872, DM2882, DMA4081, DMA4084, DMA4087, RM3762, RM3962, RM1350, RM1350SL,	14 12	17 27
RM2354, RM2454, RM2554, DM2663, DM2683, DMA4068	10 8	17 27

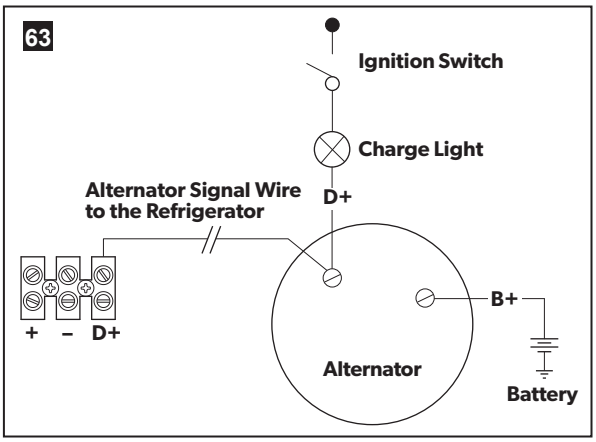

➤ Connect the vehicle's alternator (D+) to the D+ on the terminal block

RM2351, RM2451, RM2551

Note: If any of the original wire as supplied with the refrigerator shall be replaced, it shall be replaced with the original type wire or its equivalent.

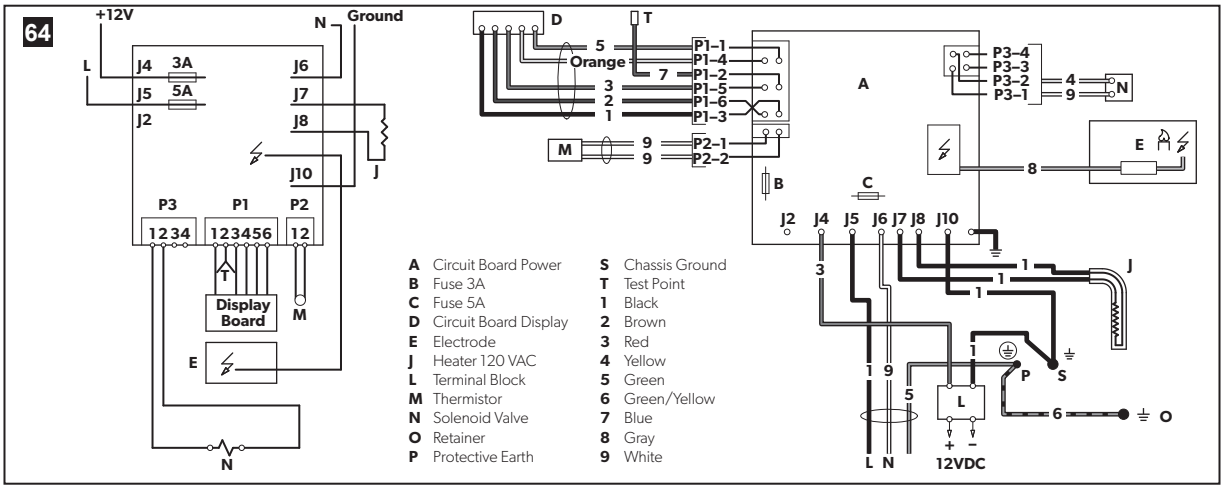

RM2354, RM2454, RM2554

Note: If any of the original wire as supplied with the refrigerator shall be replaced, it shall be replaced with the original type wire or its equivalent.

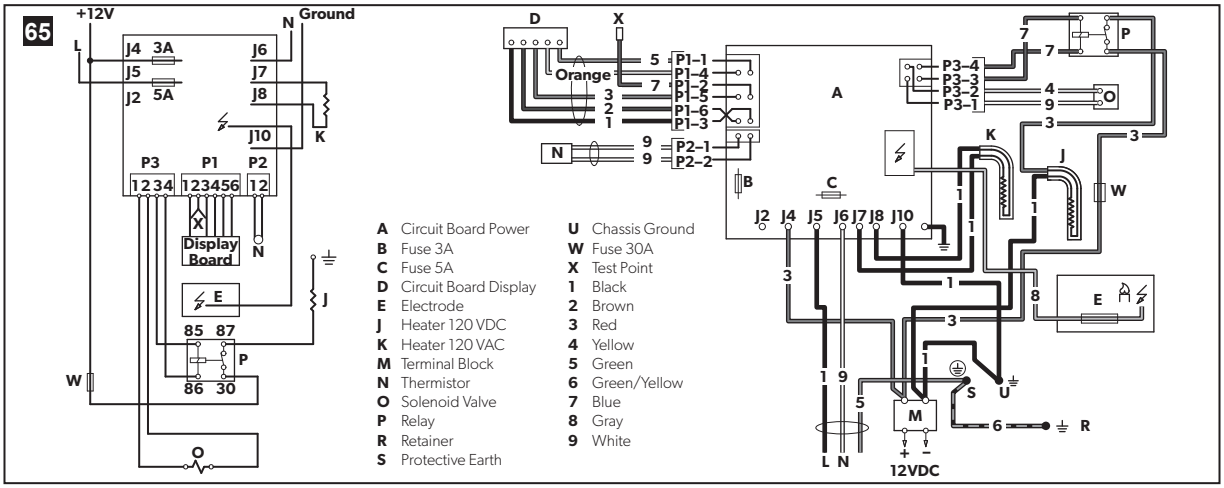

RM2354, RM2454, RM2554 (fan)

Note: If any of the original wire as supplied with the refrigerator shall be replaced, it shall be replaced with the original type wire or its equivalent.

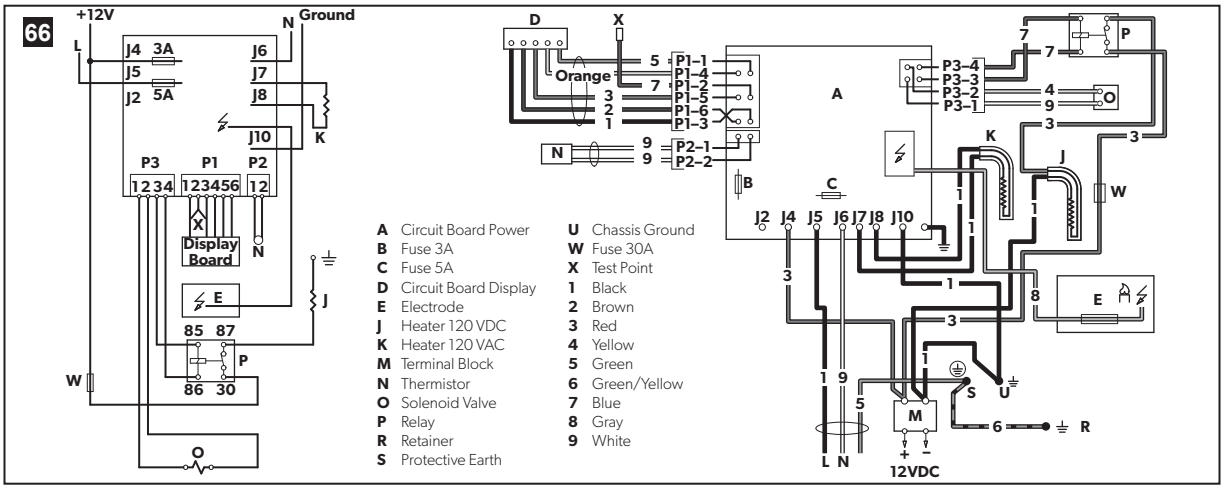

DM2672, DM2682, DM2872, DM2882, DM2652, DM2662, DM2852, DM2862 (no fan) with & without ice maker

Note: If any of the original wire as supplied with the refrigerator shall be replaced, it shall be replaced with the original type wire or its equivalent.

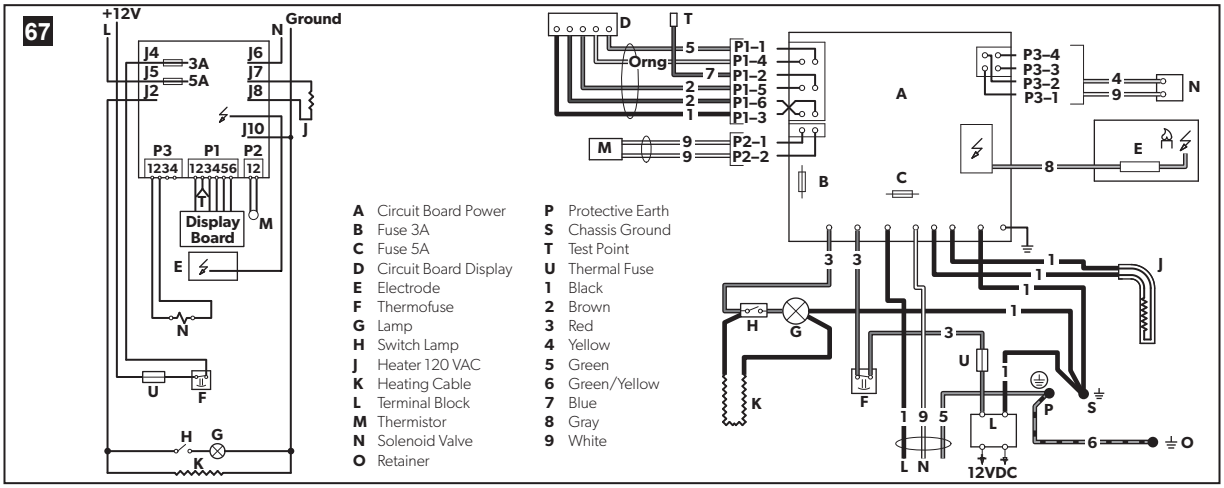

DM2652, DM2662, DM2672, DM2682, DMA4061, DMA4064, DMA4067, DM2852, DM2862, DM2872, DM2882, DMA4081, DMA4084, DMA4087 (one fan) with and without ice maker

Note: If any of the original wire as supplied with the refrigerator shall be replaced, it shall be replaced with the original type wire or its equivalent.

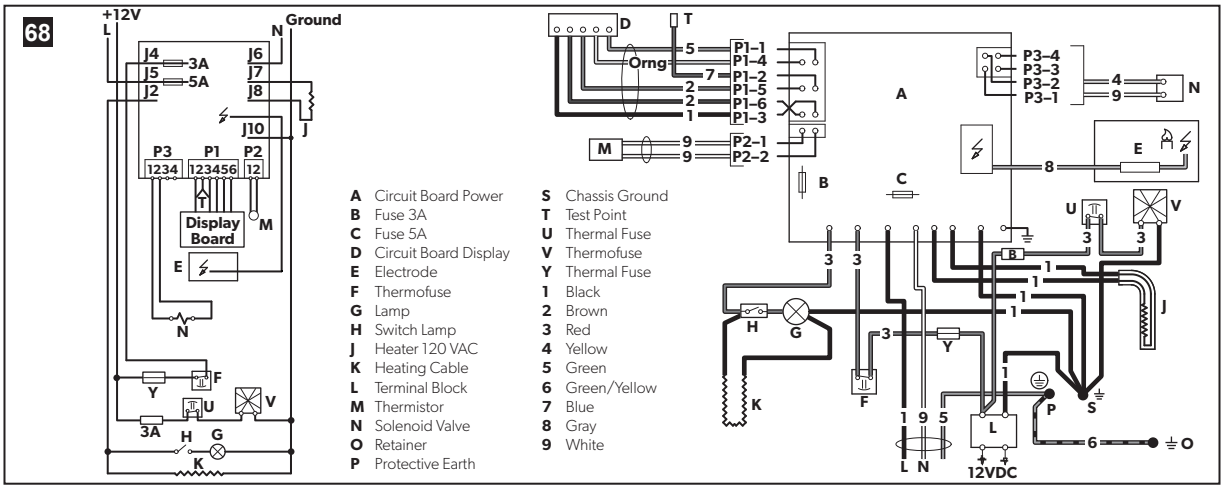

DM2852, DM2862, DM2872, DM2882 (one or two fans) with and without ice maker

Note: If any of the original wire as supplied with the refrigerator shall be replaced, it shall be replaced with the original type wire or its equivalent.

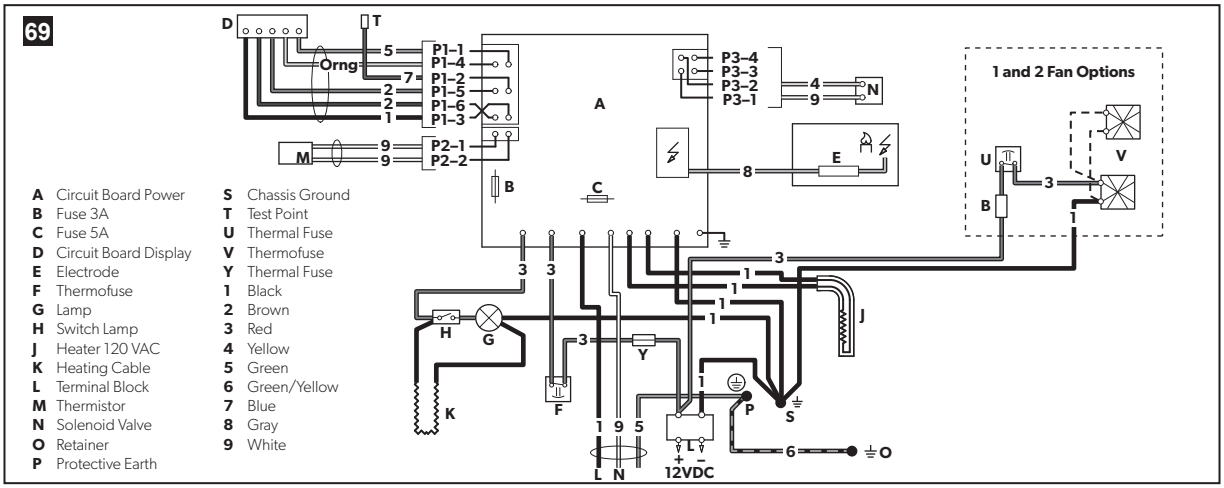

DM2663 (no fan) without ice maker

Note: If any of the original wire as supplied with the refrigerator shall be replaced, it shall be replaced with the original type wire or its equivalent.

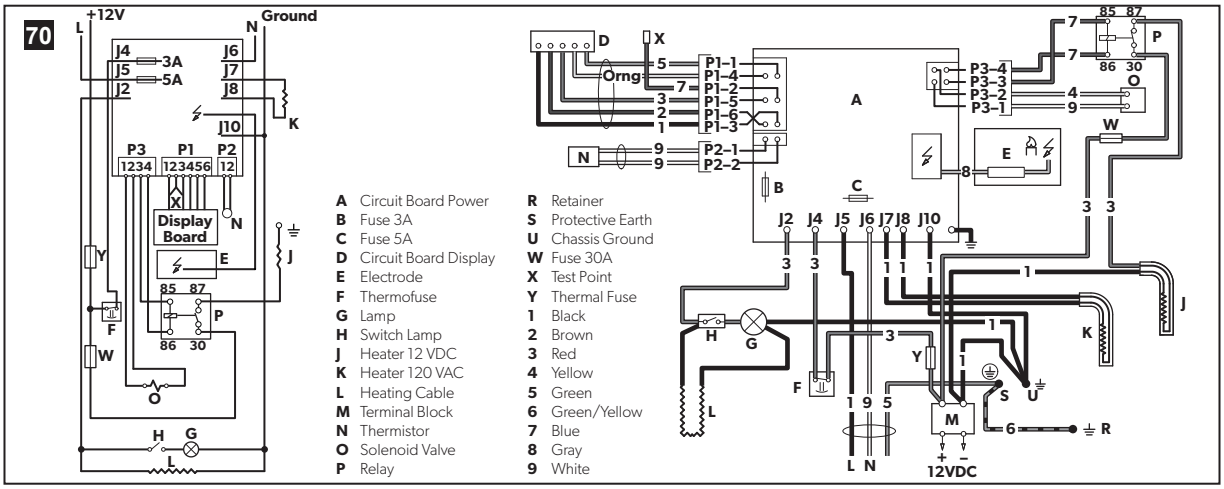

DM2663, DM2683, DMA4068 (fan) without ice maker

Note: If any of the original wire as supplied with the refrigerator shall be replaced, it shall be replaced with the original type wire or its equivalent.

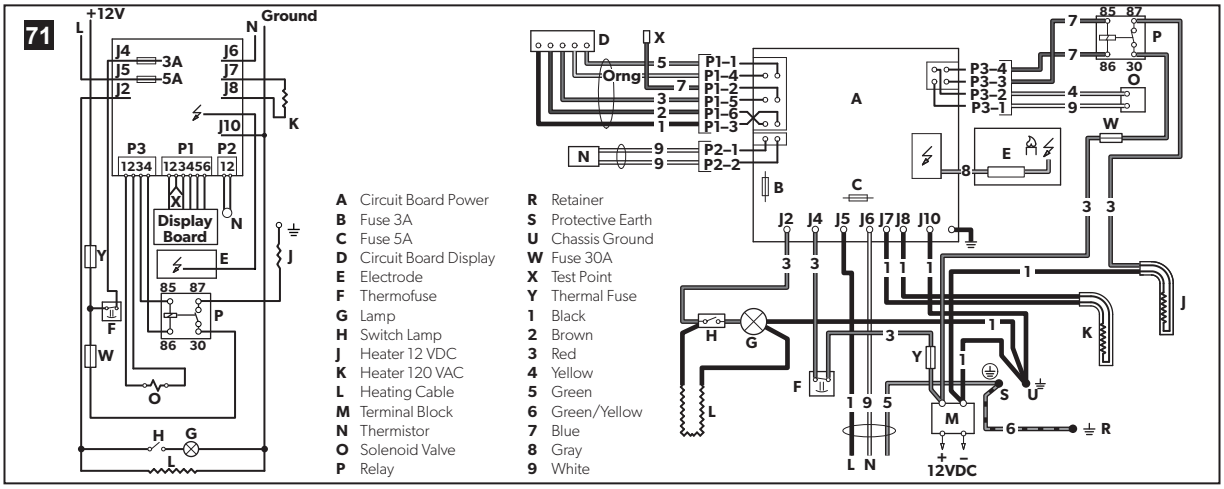

RM3762, RM3962 (no fan) without ice maker

Note: If any of the original wire as supplied with the refrigerator shall be replaced, it shall be replaced with the original type wire or its equivalent.

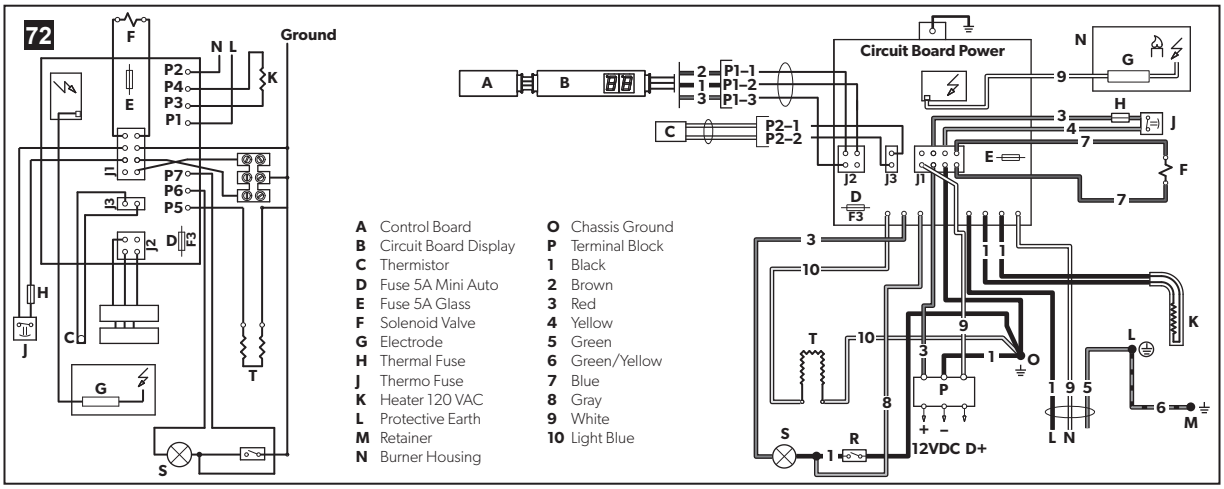

RM3762, RM3962 (one or two fans) with and without ice maker

Note: If any of the original wire as supplied with the refrigerator shall be replaced, it shall be replaced with the original type wire or its equivalent.

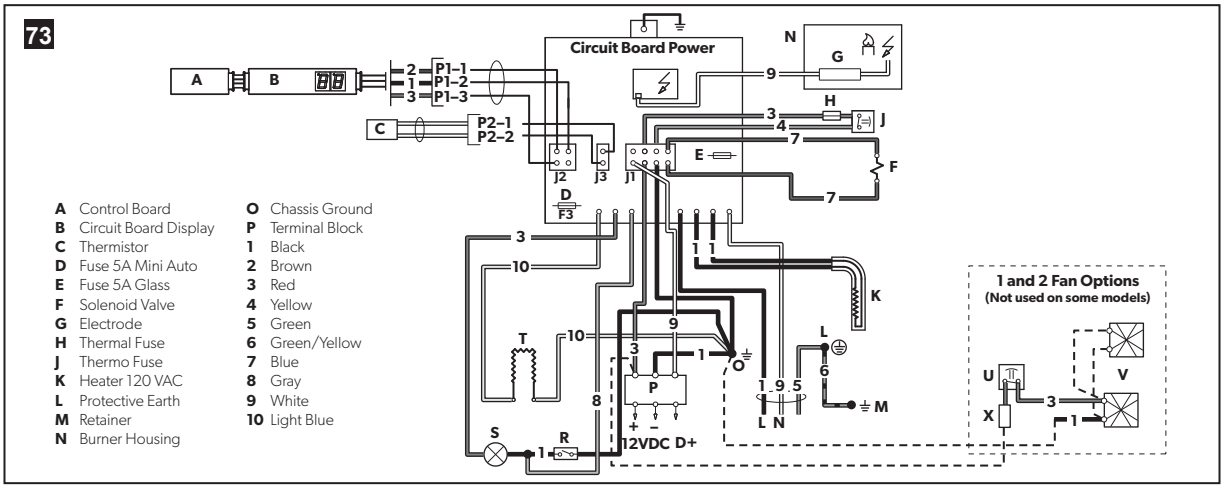

RM1350M (manual door lock & door insert panels or steel doors)

Note: If any of the original wire as supplied with the refrigerator shall be replaced, it shall be replaced with the original type wire or its equivalent.

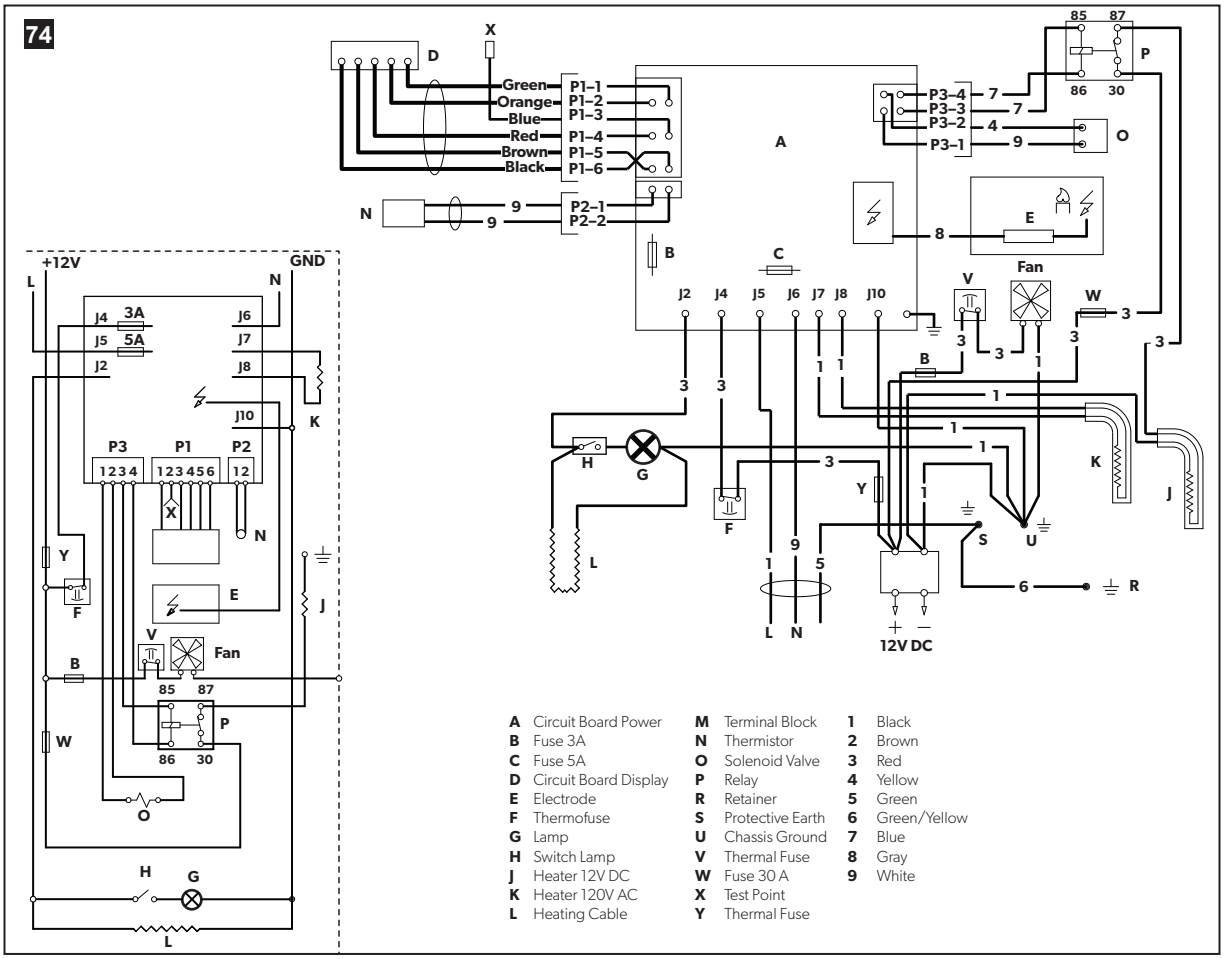

RM1350MIM (manual door lock, ice maker & door insert panels)

Note: If any of the original wire as supplied with the refrigerator shall be replaced, it shall be replaced with the original type wire or its equivalent.

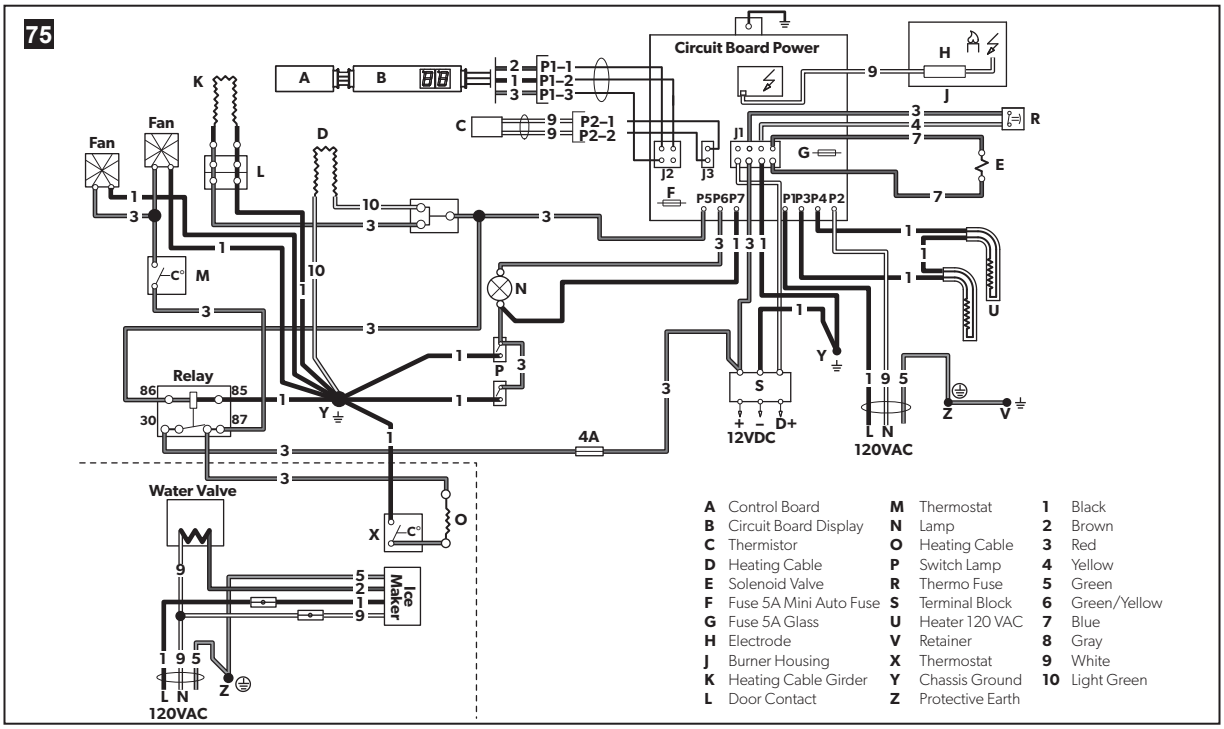

During operation, the ice maker will add 1.4A to the refrigerator's total draw.

RM1350SLM (manual door lock & door insert panels or steel doors)

Note: If any of the original wire as supplied with the refrigerator shall be replaced, it shall be replaced with the original type wire or its equivalent.

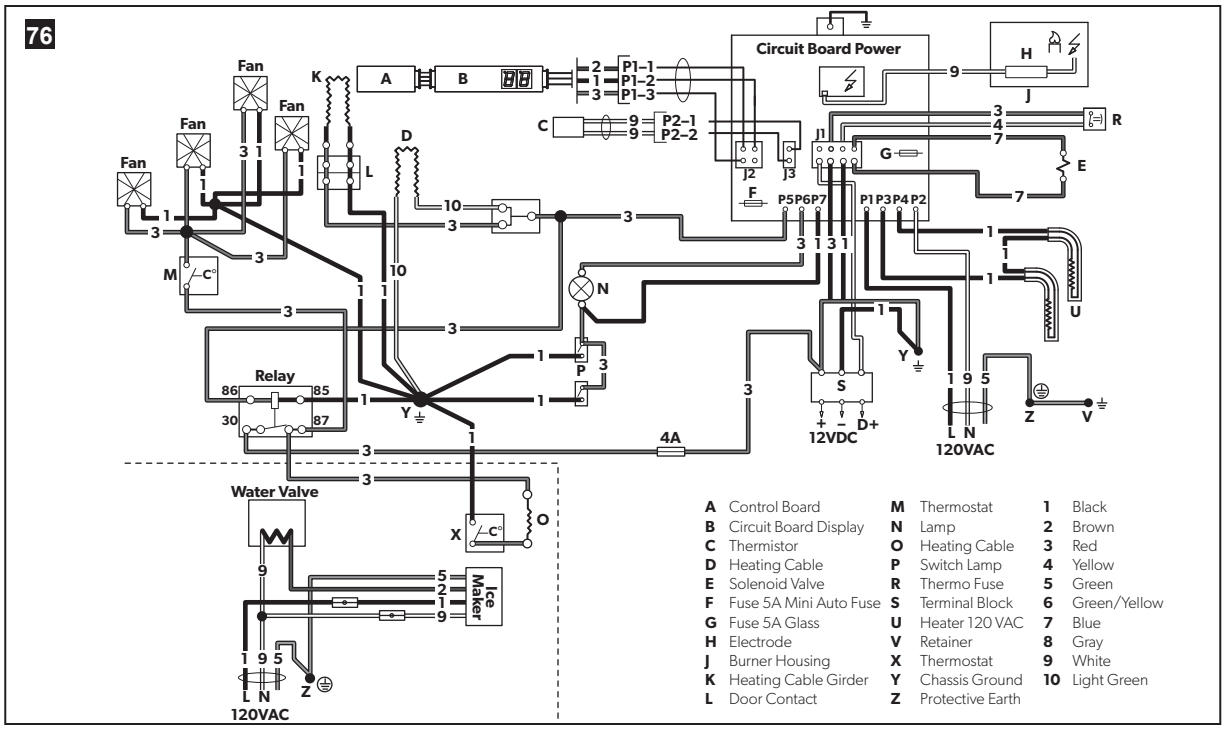

During operation, the ice maker will add 1.4A to the refrigerator's total draw.

RM1350IM (automatic door lock, ice maker & steel doors)

Note: If any of the original wire as supplied with the refrigerator shall be replaced, it shall be replaced with the original type wire or its equivalent.

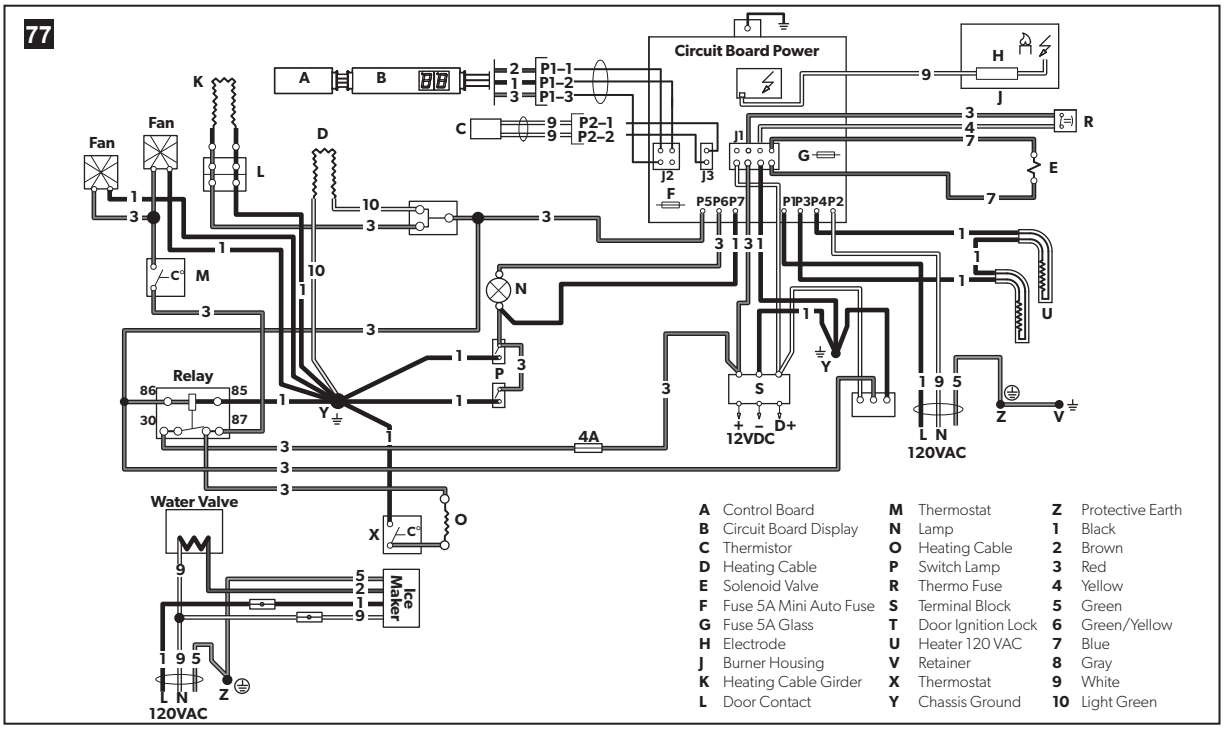

During operation, the ice maker will add 1.4A to the refrigerator's total draw.

RM1350WIM (automatic door lock, ice maker, water dispenser & door insert panels or steel doors)

Note: If any of the original wire as supplied with the refrigerator shall be replaced, it shall be replaced with the original type wire or its equivalent.

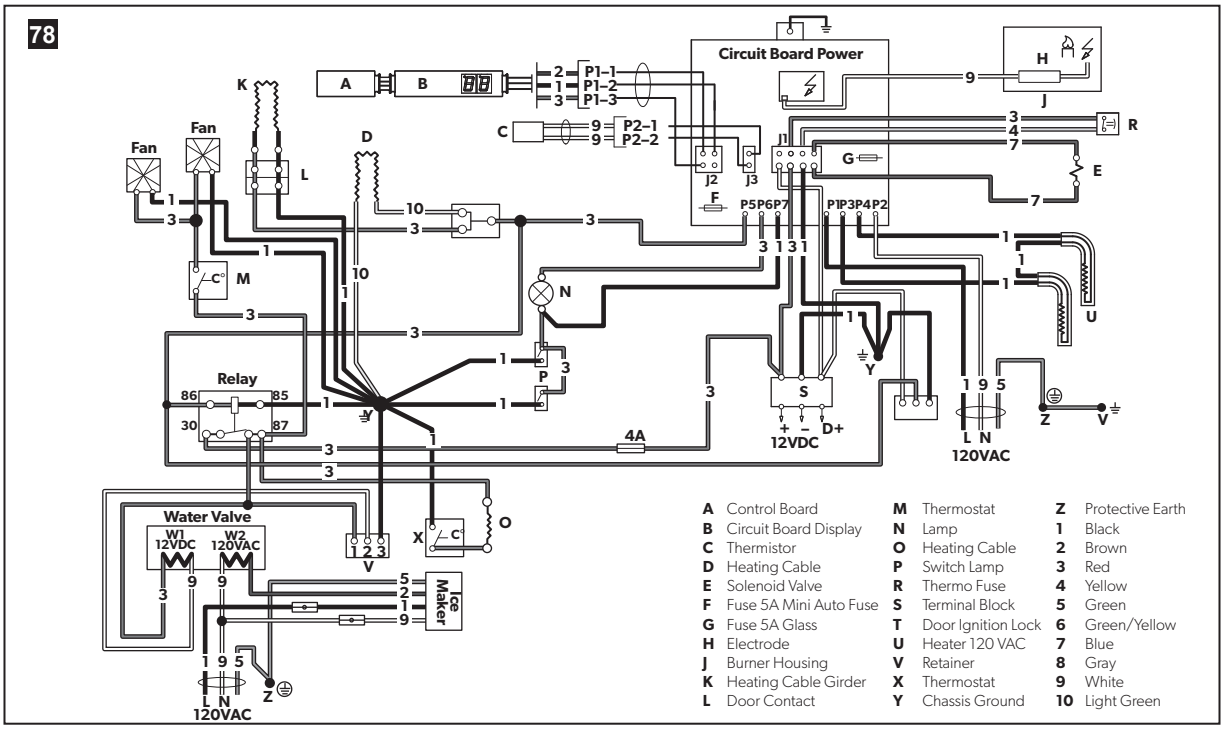

During operation, the ice maker will add 1.4A to the refrigerator's total draw.

RM1350WID (automatic door lock, ice maker, water and ice dispensers & door insert panels or steel doors)

Note: If any of the original wire as supplied with the refrigerator shall be replaced, it shall be replaced with the original type wire or its equivalent.

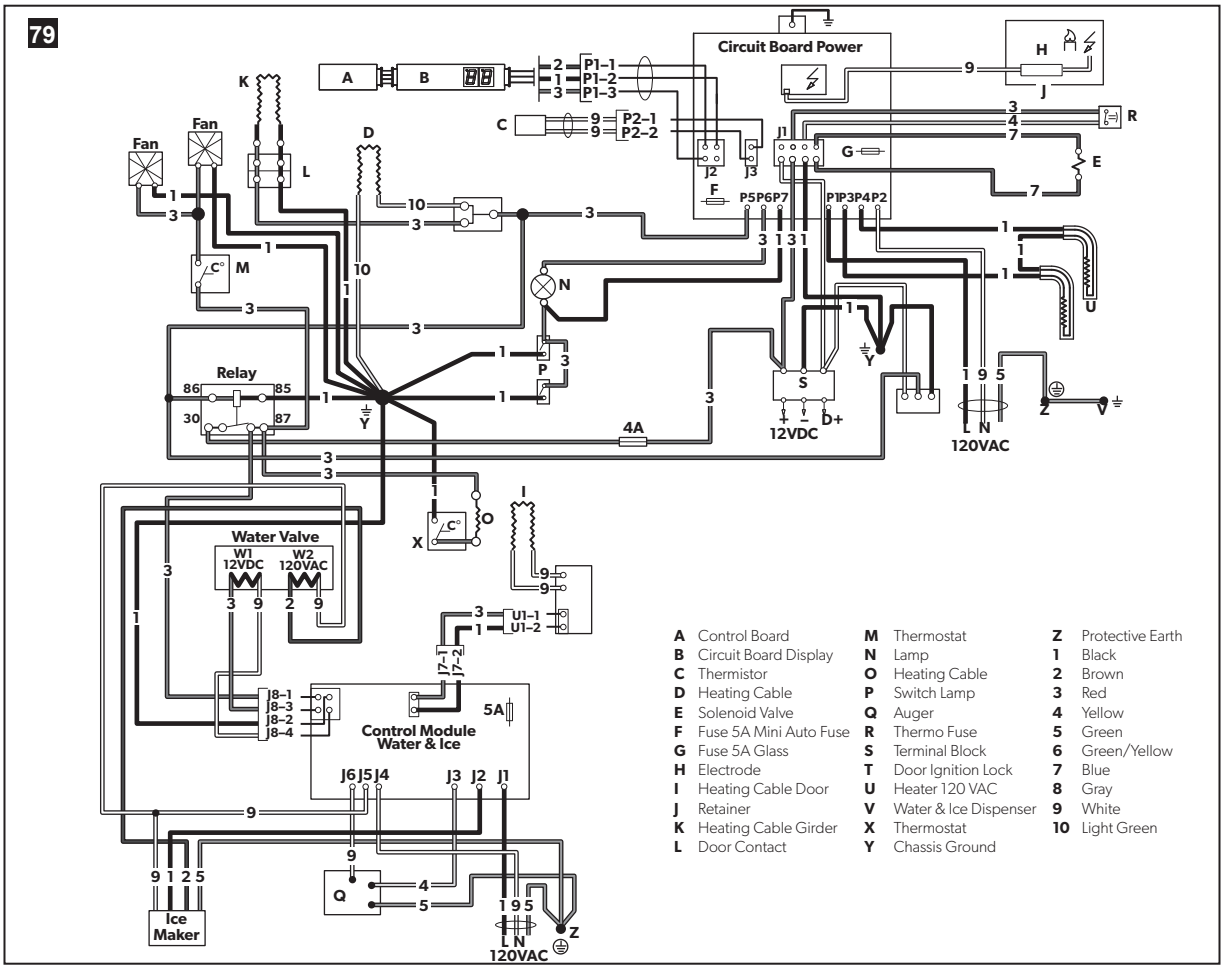

During operation, the ice maker will add 1.4A to the refrigerator's total draw.

6.7 Reversing the Door Swing

RM2351, RM2354, RM2451, RM2454, RM2551, RM2554, RM3762, RM3962, DM2652, DM2662, DM2663, DM2852, DM2862: A hinge kit must be used in order to change the door swing. For the conversion kit number, visit www.Dometic.com/support.

On refrigerator models with wrap around stainless steel doors, there is no door reversal kit. A replacement door with the correct hinge profile will be required.

DM2672, DM2682, DM2683, DM2872, DM2882

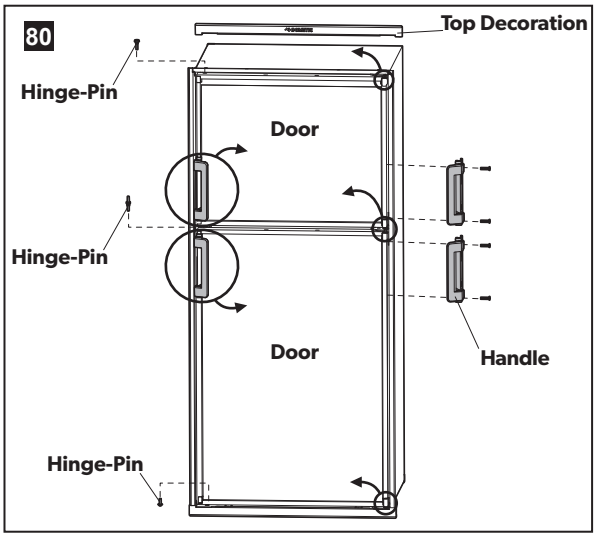

- Open the door and remove the three screws holding the upper hinge to the frame.
- Lift the freezer door off the middle hinge and set it aside.
- Remove the screws holding the middle hinge and lift the fresh-food door off the lower hinge.
- Remove the screws holding the lower hinge.
- Remove the top and bottom caps on each door.
- Unscrew the inserts and blanks and move them to the opposite side of the doors.
- Unscrew the handle and slide it off the frame.
- Install the door handle on the opposite side of the door by sliding onto the frame and securing it using the screws.
- Install the top and bottom caps to the door.
- Swap the upper and lower hinges.
- Flip the middle hinge over.
- Secure the hinges to the frame, starting at the bottom.
- Re-attach each door in the reverse order of their removal.

DMA4061, DMA4064, DMA4067, DMA4068, DMA4081, DMA4084, DMA4087

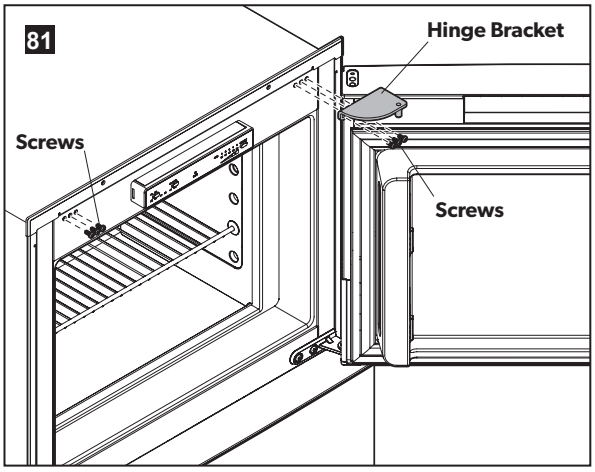

To remove the freezer door and hinges, do the following:

➤ Using a Phillips screwdriver, remove the three screws that secure the upper hinge bracket to the refrigerator, then lift the bracket to remove it.

This upper hinge bracket will be reinstalled as the lower hinge bracket.

➤ Using a Phillips screwdriver, remove the three screws on the opposite side of the frame.

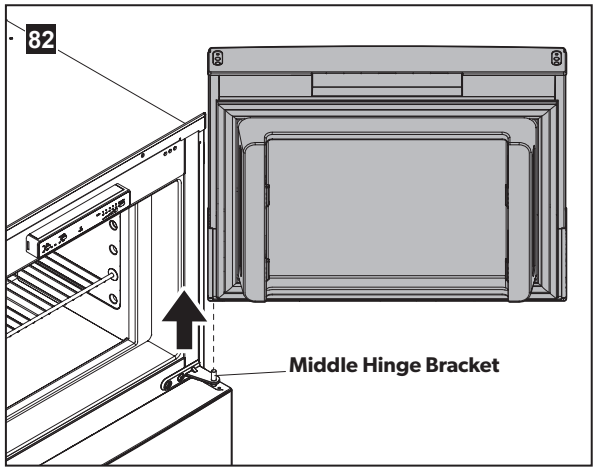

➤ Gently pull the door upward off the middle hinge to release the magnetic seal and remove the door.

➤ Lay the door on a soft surface, finish side down.

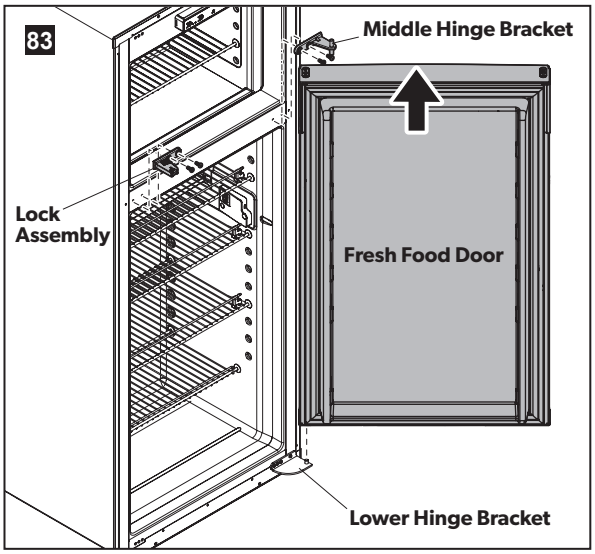

To remove the fresh food door and hinges, do the following:

➤ At the top of the fresh food door, use a Phillips screwdriver to remove the two screws that secure the lock assembly and the two screws that secure the middle hinge bracket.

➤ Lift the middle hinge bracket to remove it.

➤ Gently pull the door upward off the lower hinge to release the magnetic seal and remove the door.

➤ Lay the door on a soft surface, finish side down.

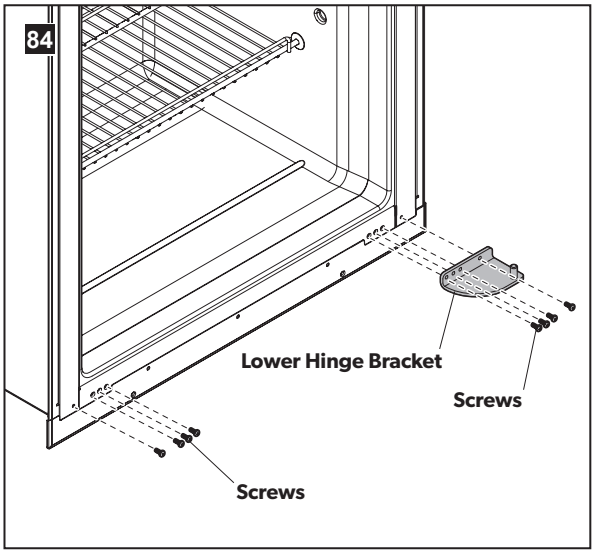

➤ Using a Phillips screwdriver, remove the four screws securing the lower hinge bracket to the refrigerator, then lift the bracket up to remove it.

This lower hinge bracket will be reinstalled as the upper hinge bracket.

➤ Using a Phillips screwdriver, remove the four screws on the opposite side of the frame.

➤ Install the upper hinge bracket in the lower hinge bracket new location on the opposite side, securing it with the four Phillips screws.

➤ Reinstall the remaining four Phillips screws in the holes in the original lower hinge bracket location.

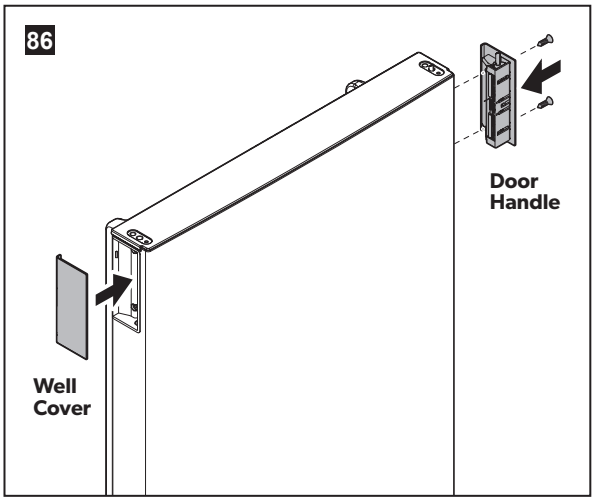

At reinstallation, the freezer door handle will rotate 180° to become the fresh food handle. The fresh food handle will rotate 180° to become the freezer door handle.

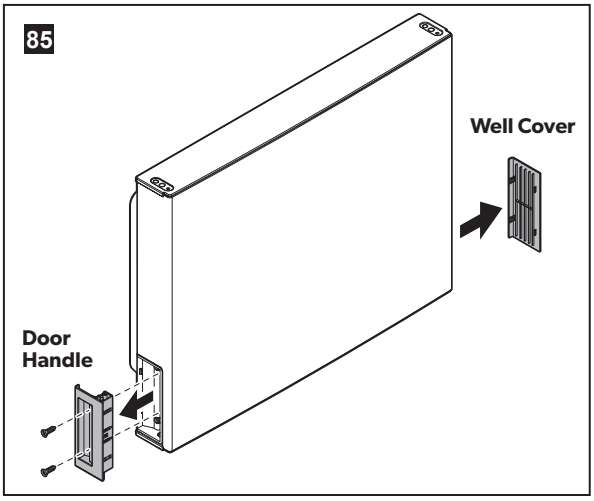

To reverse the door handle and the well cover, do the following:

➤ Remove the screws securing the freezer door handle.

➤ Push in the handle's plunger pin and depress the handle latch, then lift the handle out of the handle well.

➤ Pop off the well cover on the opposite edge of the door.

➤ Snap the well cover onto the original freezer handle location. Align the cover under the edge of the door cap.

➤ Repeat the steps above for the fresh food door.

➤ Rotate the original freezer handle 180°.

➤ Push in the handle's plunger pin and depress the handle latch, then place the door handle into the fresh food door handle well.

➤ Be sure the handle's plunger pin is inserted in the hinge hole.

➤ Reinstall the screws to secure the handle.

➤ Repeat steps above to secure the original fresh food door handle to the freezer door.

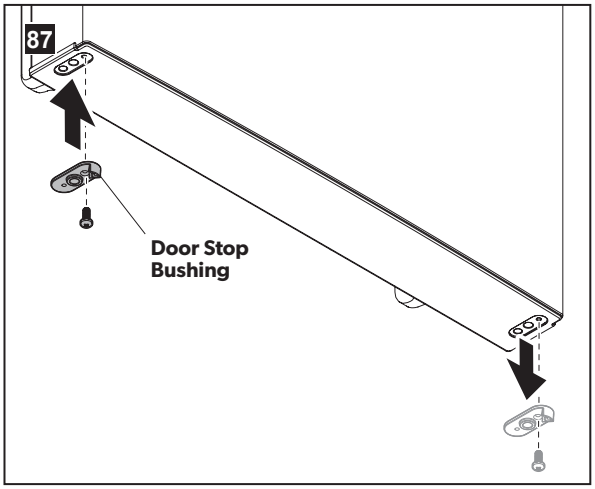

To reverse the door stop bushing from both doors, do the following:

➤ Using a Torx driver, remove the door stop bushing from the bottom of both doors and install it on the opposite side of each door.

The door stop bushing should not hang over the door edge.

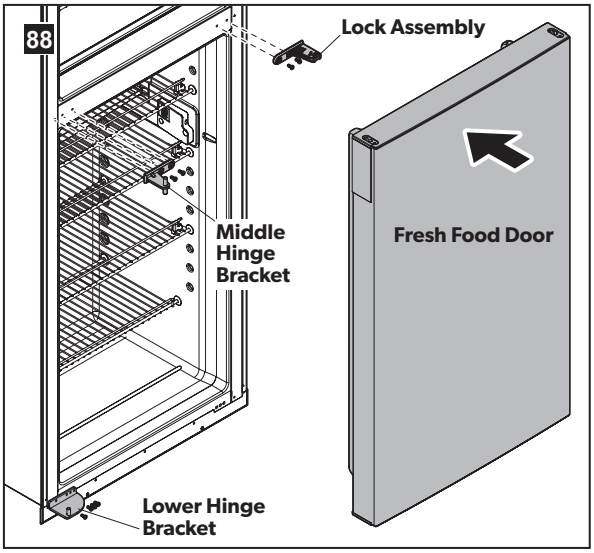

To reinstall the fresh food door, lock, and middle hinge bracket, do the following:

➤ Lower the fresh food door into position by aligning the hole from the door stop bushing onto the pin on the lower hinge bracket.

The door's magnetic seal should hold the door in place to install the middle hinge bracket.

➤ Align the middle hinge bracket at the edge of the fresh food door, above the lower hinge bracket.

➤ Reinstall the middle hinge bracket, but do not fully tighten the screws.

➤ Align the lock assembly on the other edge of the fresh food door, above the new handle location.

➤ Reinstall the lock assembly, but do not fully tighten the screws.

➤ Ensure the door aligns horizontally and vertically, swings freely, and seals properly on all sides.

➤ Tighten all middle hinge and lock assembly screws.

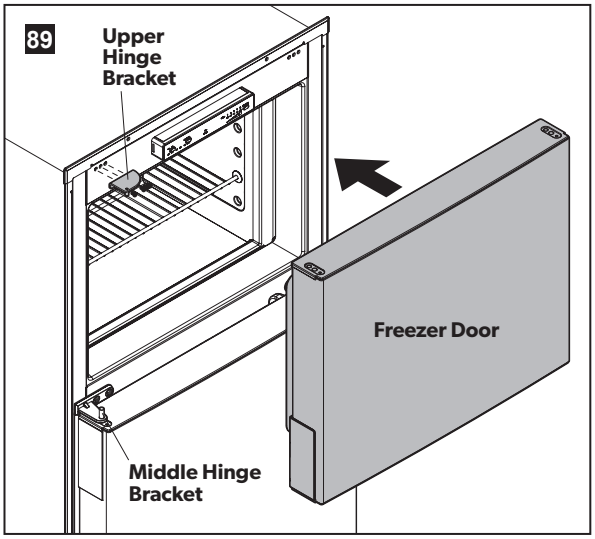

To reinstall the freezer door and upper hinge bracket, do the following:

- Lower the freezer door into position by aligning the hole from the door stop bushing onto the middle hinge bracket pin.

  The door's magnetic seal should hold the door in place to install the upper hinge bracket.

- Align the upper hinge bracket at the edge of the freezer door, above the middle hinge bracket, and install using the three hinge screws. Do not fully tighten.
- Ensure the door aligns horizontally and vertically, swings freely, and seals properly on all sides.
- Fully tighten the hinge screws on the upper hinge bracket.

  If necessary, reconnect the wiring, plug in the power cord, or turn the breaker on.

- Return the refrigerator to the enclosure as described in "Securing the Refrigerator" on page 30.

6.8 Installing the Door Panels

RM2351, RM2354, DM2652, DM2662, DM2663, DM2672, DM2682, DM2683, DM2852, DM2862, DM2872, DM2882, RM2451, RM2454, RM2551, RM2554

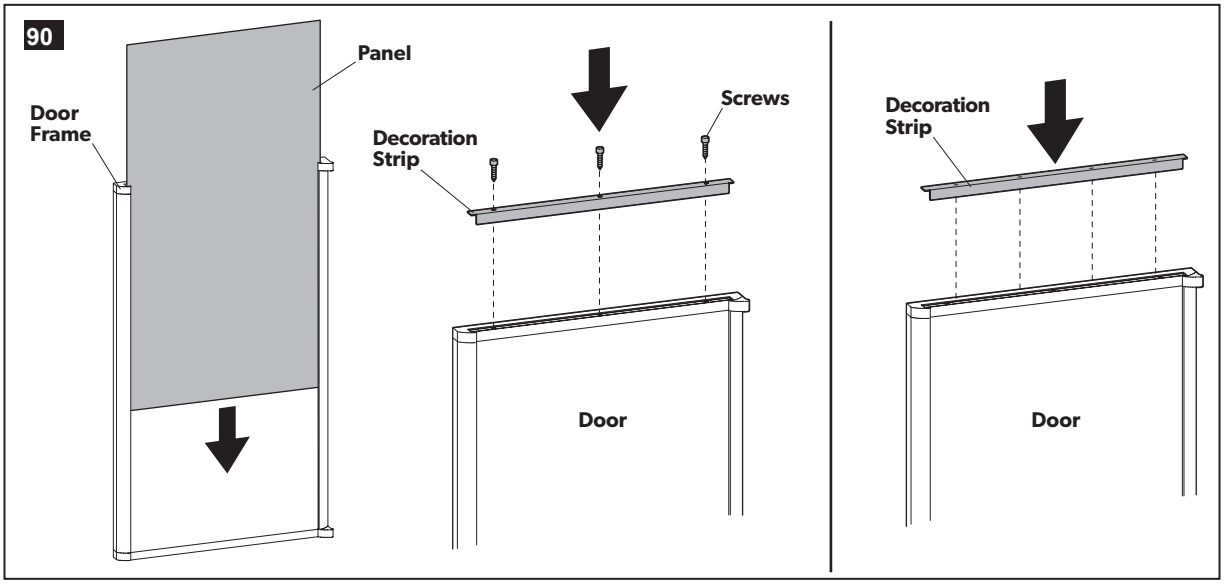

- ➤ Open the door 90 degrees.
- ➤ Locate the decoration strips taped to one of the shelves or to the inside of the door.
- ➤ Insert the vertical edges of the door panel into the grooves of the door frame.
- ➤ Push the panel downwards so that the lower horizontal edge of the panel is fitted into the bottom groove.
- ➤ Secure the decoration strips by using three screws, or by snapping them in, depending on the model.

RM3762, RM3962

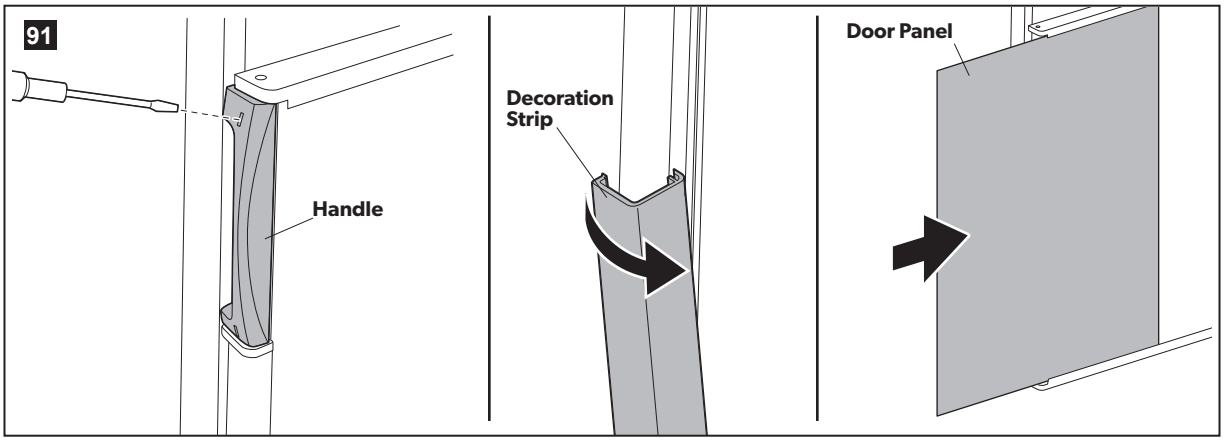

- ➤ Remove the handle using a flat-bladed screwdriver to push the tabs away.
- ➤ Insert a finger into the plastic profile and pull to remove the decoration strip.
- ➤ Open the door 90 degrees.
- ➤ Insert the door panel edges into the grooves of the door frame.
- ➤ Push the panel sideways until the edge of the panel is fitted into the opposite side groove.
- ➤ Snap on the decoration strip.
- ➤ Install the door handle.

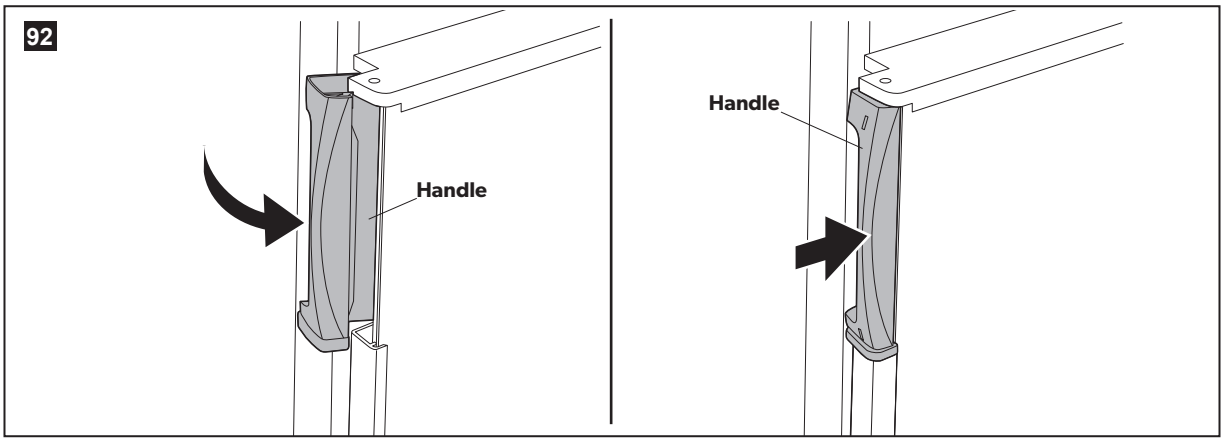

➤ Snap on the door handle by inserting the two tabs into the door handle slot and sliding it into place.

➤ Secure the handle using two screws.

RM1350, RM1350SL

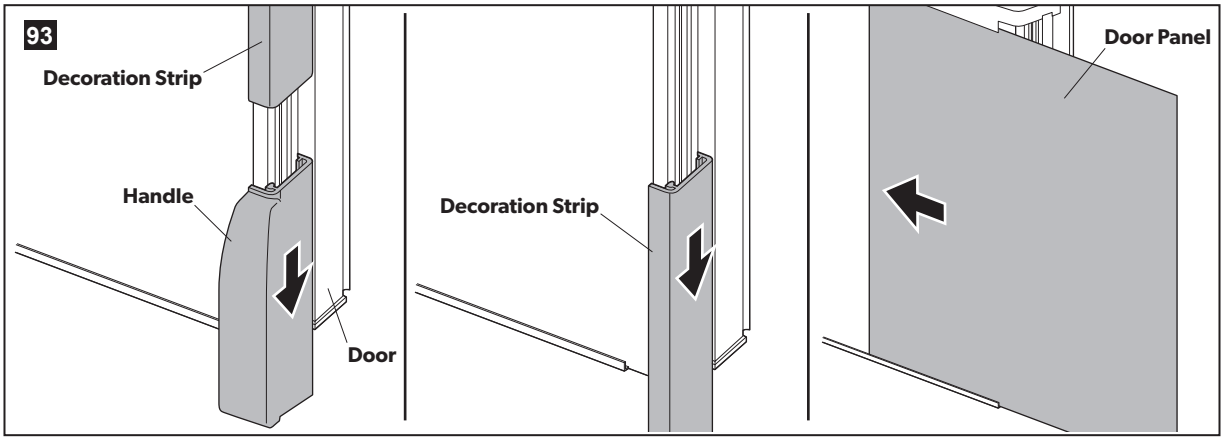

➤ Open the door and remove the screw securing the handle to the door.

➤ Slide off the door handle.

RM1350WID: It is not necessary to remove the right freezer-door handle in order to install the door panel.

➤ Slide off the decoration strip.

➤ Insert the door panel edges into the grooves of the door frame.

➤ Push the panel sideways until the edge of the panel is fitted into the opposite side groove.

➤ Replace the decoration strip.

➤ Slide the door handle into place and secure it using the screw.

6.9 Replacing the Door Panels

To replace a mounted door panel, follow these steps:

➤ Remove the decoration strip and the door panel.

➤ Install the new panel according to the previous instructions.

7 DISPOSAL

⚠ WARNING SUFFOCATION AND ENTRAPMENT HAZARD: Remove fresh-food and freezer doors from refrigerator prior to disposal. Failure to obey this warning could entrap a child and result in death or brain damage.

Leave shelves in place to prevent children from easily climbing inside the refrigerator. Recycle the refrigerator using environmentally responsible practices.

Refrigerants must be recovered/recycled by a licensed technician who is EPA-certified in refrigerant recovery and recycling procedures. Disposal must comply with all applicable local and national codes.

Limited Warranty

LIMITED WARRANTY AVAILABLE AT
WWW.DOMETIC.COM/WARRANTY.

IF YOU HAVE QUESTIONS, OR TO OBTAIN A COPY OF THE LIMITED WARRANTY FREE OF CHARGE, CONTACT:

DOMETIC CORPORATION
CUSTOMER SUPPORT CENTER
5155 VERDANT DRIVE
ELKHART, INDIANA 46516
1-800-544-4881 OPT 1

Mobile living made easy.

DOMETIC

dometic.com

YOUR LOCAL DEALER

dometic.com/dealer

YOUR LOCAL SUPPORT

dometic.com/contact

YOUR LOCAL SALES OFFICE

dometic.com/sales-offices