English

Dometic

Installation Instructions

Cassette Toilet for Recreation Vehicles

CT 4050 CTS 4050 CTW 4050 CTLP 4050
CT 4110 CTS 4110 CTW 4110 CTLP 4110 CTP 4110

CE e 1

EN

N 1-1

MBA 01/2012

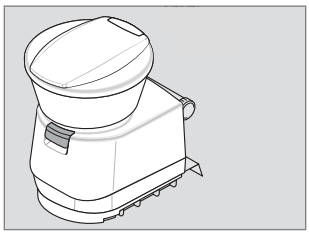

CT 4050

CT 4110

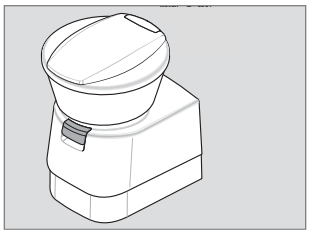

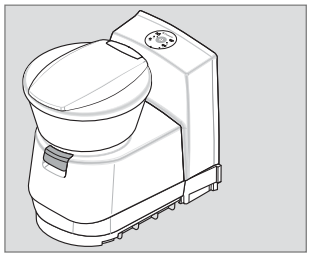

CTLP 4050

CTLP 4110

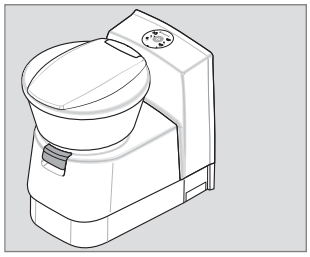

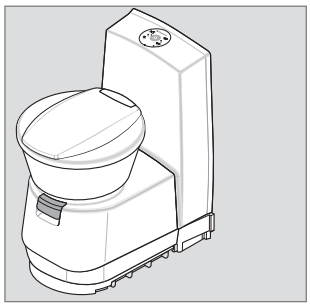

CTS 4050

CTS 4110

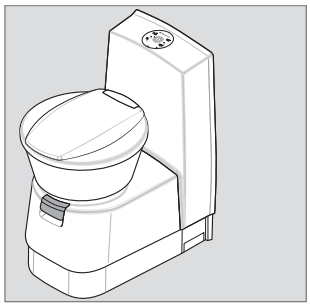

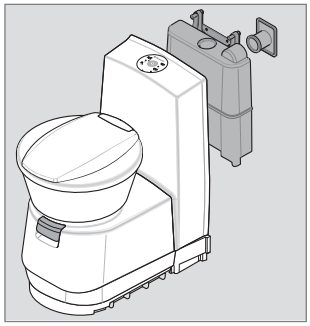

CTW 4050

CTW 4110

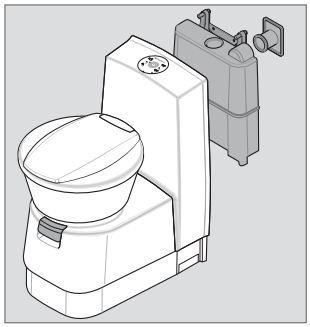

Dometic

Dometic GmbH
In der Steinwiese 16
D-57074 Siegen

www.dometic.com

© Dometic GmbH - 2011 - Subject to change without prior notice

Table of contents

1.0 General . . . 20
1.1 Guide to these operating instructions . . . 20
1.2 Copyright protection . . . 20
1.3 Explanation of symbols used in this manual . . . 20
1.4 Limitation of liability . . . 21
1.5 Warranty . . . 21
1.6 Environmental notices . . . 21
1.7 Declaration of conformity . . . 21

2.0 Safety instructions . . . 22
2.1 Intended use . . . 22
2.2 Installation notices . . . 22
2.3 Standards and regulations . . . 22

3.0 Description of model . . . 23
3.1 Model identification . . . 23
3.2 Toilet identification label . . . 23
3.3 Explanation of components . . . 23

4.0 Installation of toilet . . . 24
4.1 Installing the service door . . . 24
4.2 Create wall apertures . . . 24
4.2.1 Wall aperture service door . . . 24
4.2.2 Wall aperture flap . . . 24
4.3 Installing the toilet . . . 24
4.3.1 Installing the CT 4xxx toilet . . . 25
4.3.1.1 Fitting the CT 4xxx toilet . . . 25
4.3.1.2 Installing the control and operator panel of the CT 4xxx toilet . . . 26
4.3.2 Installing the CTS 4xxx, CTW 4xxx and CTLP 4xxx toilets . . . 27
4.3.2.1 Fitting the wall holder . . . 27
4.3.2.2 Fitting the CTS 4xxx, CTW 4xxx and CTLP 4xxx toilets . . . 28
4.4 Water connection . . . 29
4.5 Flap installation . . . 29
4.6 Ventilation . . . 30
4.6.1 Ventilation with SK 5 . . . 30
4.6.2 Ventilation with SK 4 . . . 30
4.7 Electric connection . . . 31
4.7.1 System diagrams . . . 31
4.7.1.1 General system diagrams . . . 31
4.7.1.2 System diagram CTW 4xxx . . . 32
4.7.1.3 System diagram CT/ CTS/ CTLP 4xxx . . . 32

5.0 Annex . . . 65
5.1 Circuit diagrams . . . 66
5.1.1 Circuit diagram (models with internal water tank, model CTW 4xxx) . . . 66
5.1.2 Circuit diagram (models with internal water tank and SOG ventilation) . . . 67
5.1.3 Circuit diagram (models with external water tank) . . . 68
5.1.4 Circuit diagram (models with external water tank and SOG ventilation) . . . 69
5.1.5 Circuit diagram (external water tank) AUSTRALIA . . . 70
5.1.6 Circuit diagram (external water tank and SOG ventilation) AUSTRALIA . . . 71
5.1.7 Legend . . . 72
5.2 Dimensioned sketches . . . 73
5.3 Templates . . . 78

1.0 General

1.1 Guide to these installation instructions

Before installing the toilet read and understand the contents of this manual.

These instructions provide you with the necessary guidance for the proper installation of the toilet. **Observe the safety instructions in particular.** Observing the instructions and handling recommendations is important for dealing with the toilet safely and for protecting you from injury and the toilet from damage. You must understand what you have read before you carry out a task.

1.2 Copyright protection

The information, texts and illustrations in these instructions are copyright protected and are subject to industrial property rights. No part of these instructions may be reproduced, copied or utilised in any other way without written authorisation by Dometic GmbH, Siegen.

1.3 Explanation of symbols used in this manual

Warning notices

Warning notices are identified by symbols. A supplementary text gives you an explanation of the degree of danger.
Observe these warning notices rigorously. You will thus protect yourself and other people from injury, and the sanitation system from damage.

CAUTION!

CAUTION **indicates a potentially hazardous situation which may result in minor or moderate injury if the given instructions are not adhered to.**

CAUTION!

CAUTION **(used without the safety alert symbol) indicates a potentially hazardous situation which may result in damage to the appliance if the given instructions are not adhered to.**

Information

INFORMATION **gives you supplementary and useful guidance.**

Environmental tip

Environmental tip **gives you useful guidance for saving energy and disposal of the appliance.**

1.4 Limitation of liability

All information and guidance in these operating instructions were prepared after taking into consideration the applicable standards and regulations as well as the current state of the art. **Dometic** reserves the right to make changes at any time which are deemed to be in the interest of improving the product and safety.
Dometic will assume no liability for damage in the case of :

- non-observation of the installation instructions
- non-observation of the operating instructions
- application not in accordance with the regulations or provisions
- use of non-original spare parts
- modifications and interferences to the appliance

1.5 Warranty

Warranty arrangements are in accordance with EC Directive 44/1999/CE and the normal conditions applicable for the country concerned. For warranty or other maintenance, please contact our customer services department. Any malfunction due to improper use is not covered by the warranty. The warranty does not cover any modifications to the appliance or the use of **non-original Dometic parts**. The warranty does not apply if the installation and operating instructions are not adhered to and no liability shall be entertained.

1.6 Environmental notices

Use of sanitary additives

In order to ensure that the recyclable packaging materials are re-used, they should be sent to the customary local collection system.

1.7 Declaration of conformity

Dometic GROUP

DECLARATION OF CONFORMITY

according to

Low Voltage Directive 73/23/EEC and
the Amendment to LVD 90/683/EEC, 2006/95/EC
Automotive Directive 72/245/EEC and
the Amendment 95/54/EC, 2009/19/EC
CE Marking Directive 93/68/EEC
End-of-Life Vehicle Directive 2000/53/EC
RoHS Directive 2002/95/EC

Type of equipment	Ceramic Cassette Toilet
Brand Name	DOMETIC
Type familiy	CT 3XXX/ CT 4XXX
Manufacturer' s (Factory)	
name	DOMETIC GmbH
address	In der Steinwiese 16, D-57074 Siegen
telephone no	INT+49 - 271 692 0
telefax no	INT+49 - 271 692 304

The following harmonized standards or technical specifications (designations) which comply with good engineering practice in safety matters in force within the EEA have been practiced:

following DIN EN 997 (12/2003)
EN 55014-1;00, A1, A2
EN 55014-2;97, A1

The equipment conforms completely with the above stated harmonized standards or technical specifications.

By signing this document, the undersigned declares as manufacturer, or the manufacturer's authorized representative established within the EEA, that the equipment in question complies with the requirements stated above.

Date	Signature	Position
2011.09.05	Dr. Michael Freitag	General Manager

2.0 Safety instructions

2.1 Intended use

This toilet is designed for installation in recreation vehicles such as caravans or motorhomes.

2.2 Installation notes

The toilet must be in principle installed so that it is accessible for maintenance work, can be easily installed and dismantled and removed from the vehicle without great effort.

CAUTION !

The toilet must be installed by trained staff only.

2.3 Standards and regulations

Installation and connection of the sanitation system must comply with the latest technical regulations, as follows:

- **The electrical installation must comply with national and local regulations..**
- **European standards**
  EN 1645-1, EN 1646-1,EN 1648-1 ,
  EN 1648-2

3.0 Description of model

3.1 Model identification

Example :

CT (S) (W) (LP) 4050 or 4110

for installation in wet cell

S = free-standing without flush water tank,with console
W = free-standing with integrated flush water tank
LP = Low Profile, low console

Cassette Toilet

3.2 Toilet identification label

The identification label contains all important details. You can read off from this the model identification, the product number and the serial number. You will find the identification label within the cassette housing after removing the cassette.

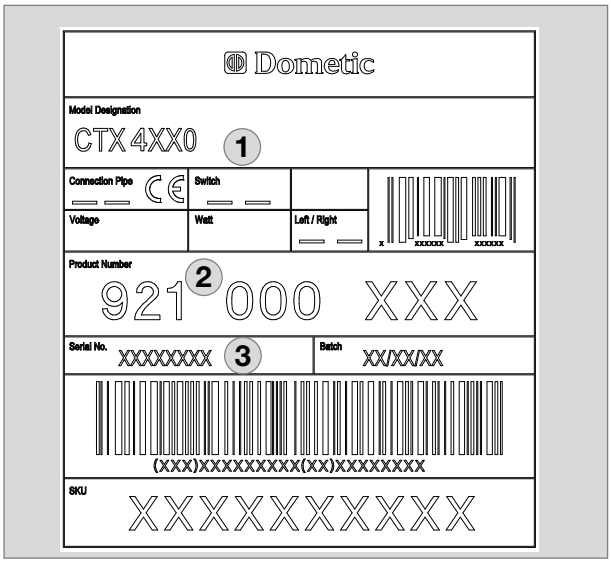

Fig. 1

1 = Model number
2 = Product number
3 = Serial number

3.3 Explanation of components

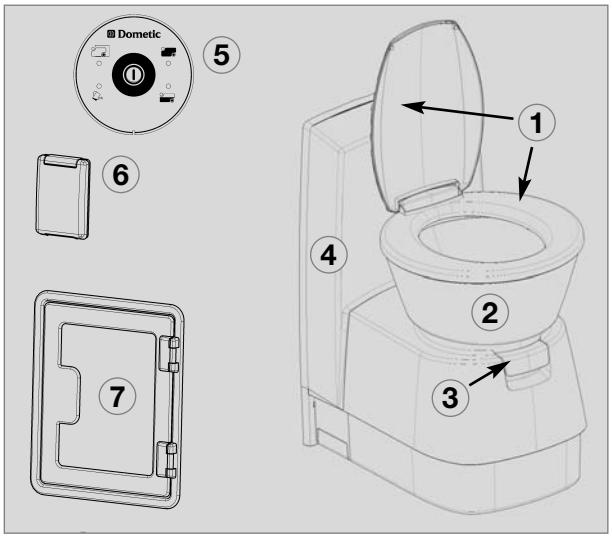

Fig. 2

1 = Removable cover and seat
2 = Toilet bowl
3 = Emptying blade for the toilet bowl
4 = Console for water tank
5 = Level indicator / control panel (flush)
6 = Flap / fresh water filler plug
7 = Service door

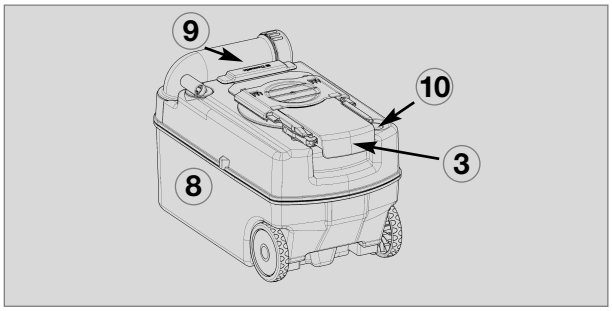

Fig. 3

8 = Cassette tank (capacity 19 l)
9 = Pour out spout
10 = Vent button for emptying

4.0 Installing the toilet

4.1 Installing the service door

The description for the installation of the service door can be found in the document supplied **Dometic Seitz SK4, SK 5)** (optional/depending on model).

4.2 Create wall apertures

4.2.1 Wall aperture service door

Make an aperture in the wall for the cassette with the following dimensions:

for service door **SK4**
y = 25 mm ; b = 305 mm and h = 375 mm ,

for service door **SK5**
y^{min} = 12.5 mm and y^{max} = 28 mm; b = 310 mm and h = 360 mm.

The x value results from the toilet installation. Observe the position of the service door (template **(3)** and **(4)**, Item 5.3.1.).

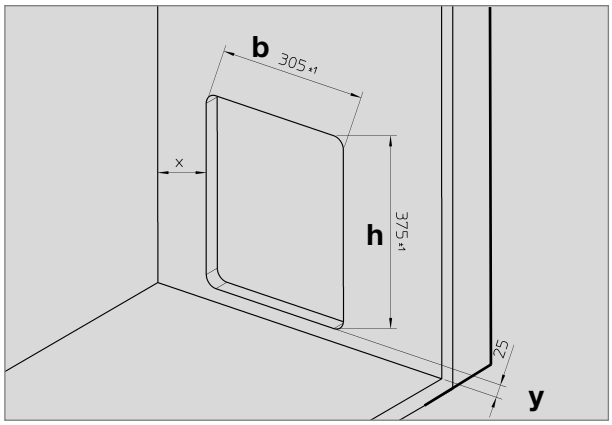

SK 4 *Fig. 4*

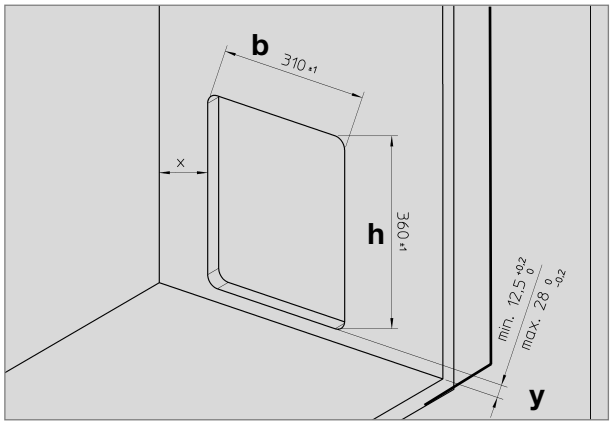

SK 5 *Fig. 5*

4.2.2 Wall aperture flap

The flap is applied when using CTW 4xxx models with an integrated water tank. Use the template **(1)** , Item 5.3.1., to make the aperture for the flap. You can find the installation instructions for the flap under Item 4.5.

4.3 Installing the toilet

CAUTION!

All components of the system must be installed in frost-protected areas. In minus temperatures there is a risk of damage due to frost.

Install the toilet according to the description of the respective model. Allow sufficient space so as not to limit the operation of the emptying valve.

Install the toilet against an upright wall only.

When installing the toilet in a wet room, we recommend connecting the toilet with the shower tub. The toilet pedestal is fitted with a projecting flange in order to cover the top rim of the shower tub.

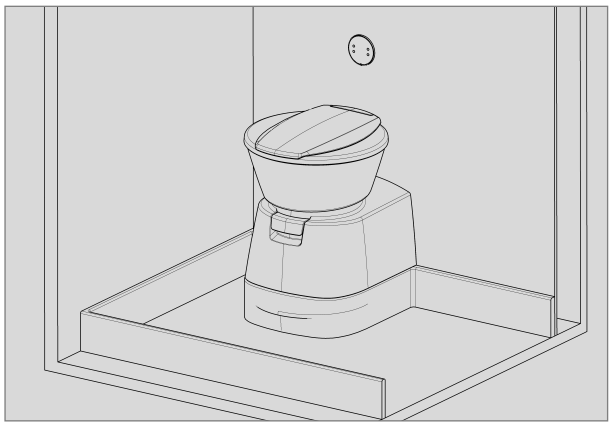

Fig. 6

4.3.1 Installing the CT 4xxx toilet

The free-standing CT 4xxx model has no integrated water tank. Install this model so that the wall behind it can absorb the control panel of the toilet, the electric connections and the water tank, if applicable. It is ideal to set a box in front of the room wall, as illustrated in Fig. 7. Install the control and operator panel in immediate proximity to the toilet (see Section 4.3.1.2).

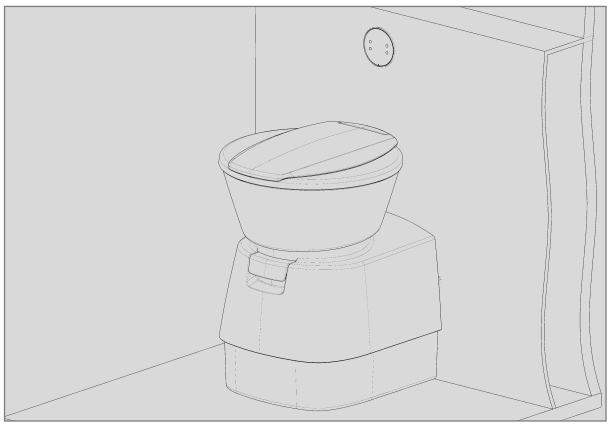

Fig.7

Note that the cassette projects 120 mm (a) out of the cassette housing (Fig. 8). The pedestal height (b) ranges from 50 to 110 mm, depending on the model.

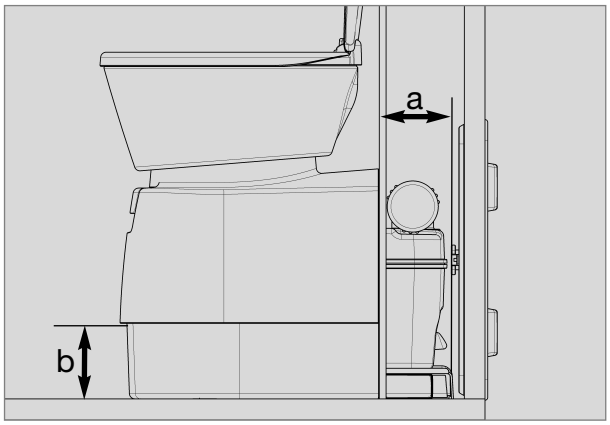

Fig. 8

4.3.1.1 Fitting the CT 4xxx toilet

Once the toilet is installed in the desired position, bolt down the floor plate with the six screws (enclosed) (Fig. 10).

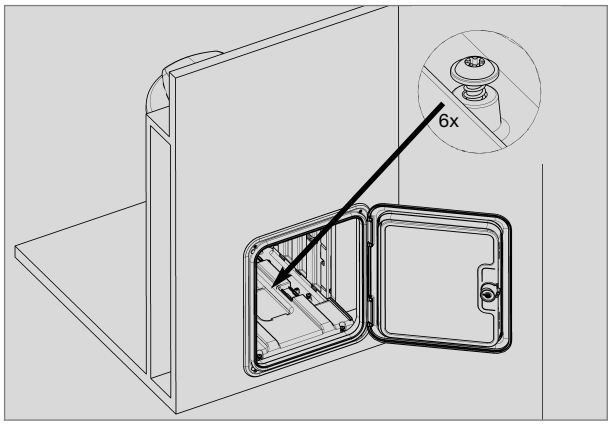

Fig. 9

Then attach the toilet housing (with no more than 7 screws, **not enclosed**) to the wall (Fig. 10,11).

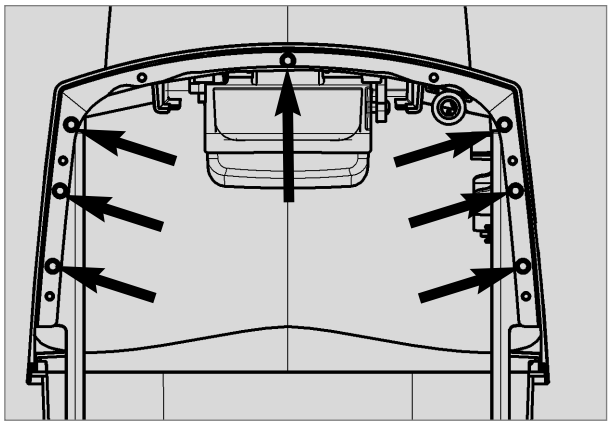

Fig. 10

Screws Ø = 4.2 mm

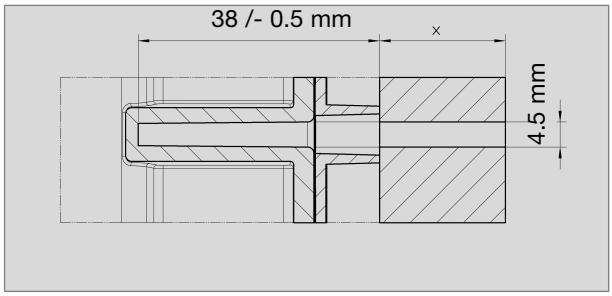

Fig. 11

To allow better cleaning of the cassette housing the base plate is additional equipped with two covers **(1)** for the fixing screws (models CT 4110 only).

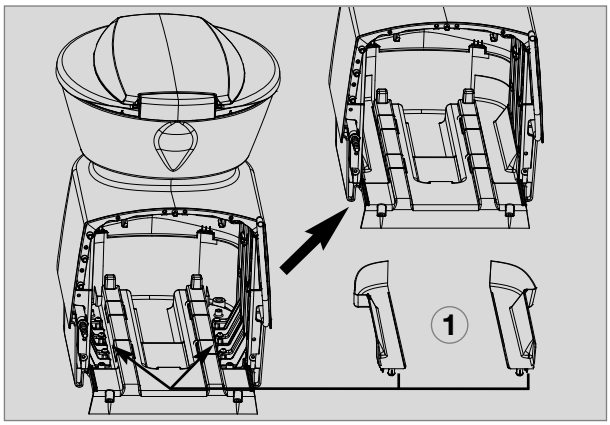

Fig. 12

4.3.1.2 Installing the control and operator panel of the CT 4xxx toilet

Install the control and operator panel for the CT 4xxx toilet in an easily accessible position on the wall. First cut the aperture in the wall (Fig. 13). Use **true-to-scale template (4)** to make the wall aperture (see Item 5.3.2).

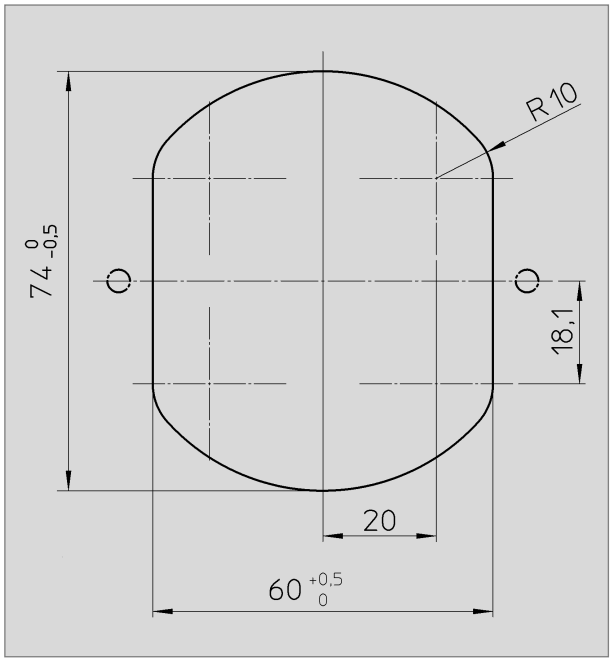

Fig. 13

In order to insert the control panel in the wall aperture, press the holding springs **(1)** of the control and operator panel back.

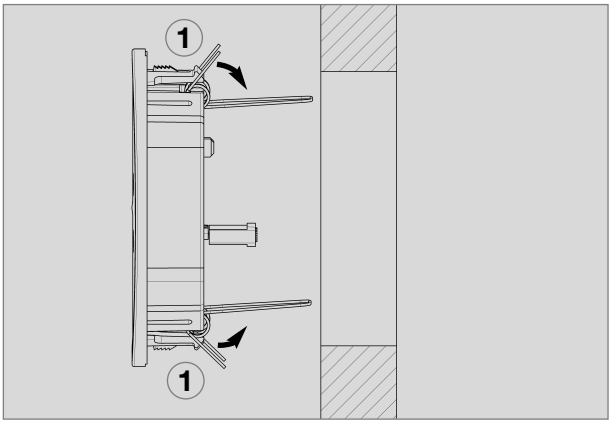

Fig. 14

Connect the electric cables on the couplers to install the control and operator panel (are supplied separately).

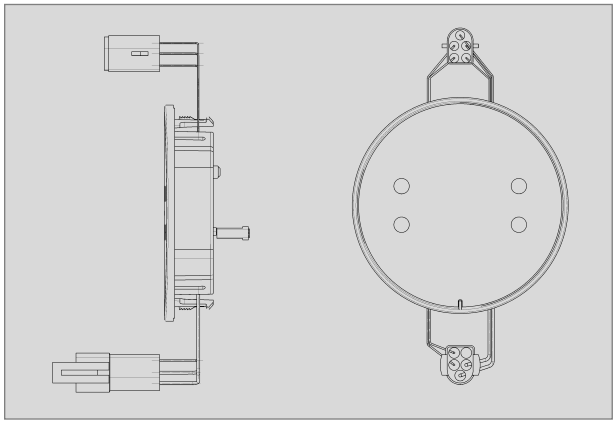

Fig. 15

4.3.2 Installing the CTS 4xxx, CTW 4xxx and CTLP 4xxx toilets

The CTW 4xxx model has an integrated water tank, while the CTS 4xxx model does not.

The control and operator panel is integrated in the housing with these models.

Both models can be installed directly against the room wall (see Fig. below). To fit the toilet and the console, a previously installed wall holder is used (see Section 4.3.2.1).

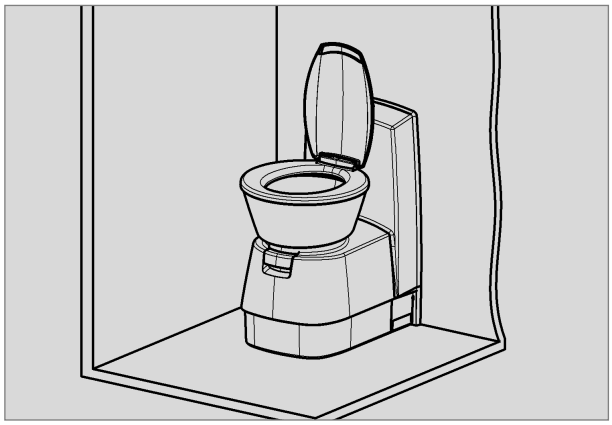

Fig. 16

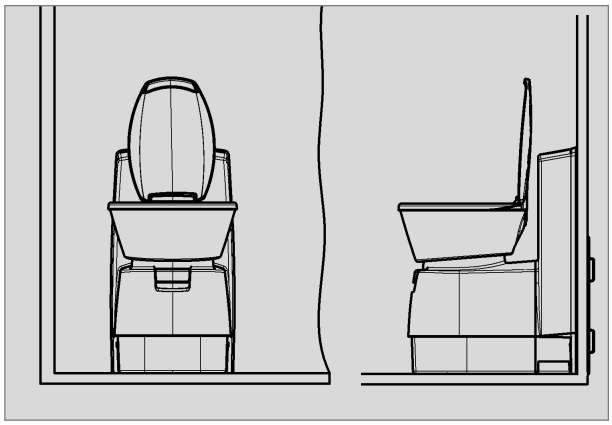

Fig. 17

4.3.2.1 Fitting the wall holder

Fit the wall holder (Fig. 18) in the designated position (see table, Fig 20).

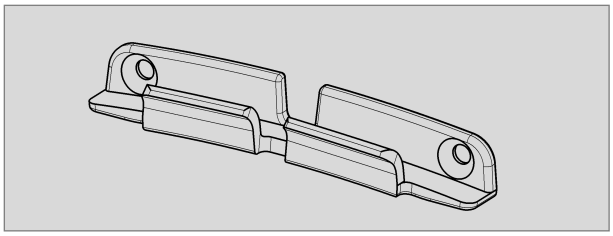

Fig. 18

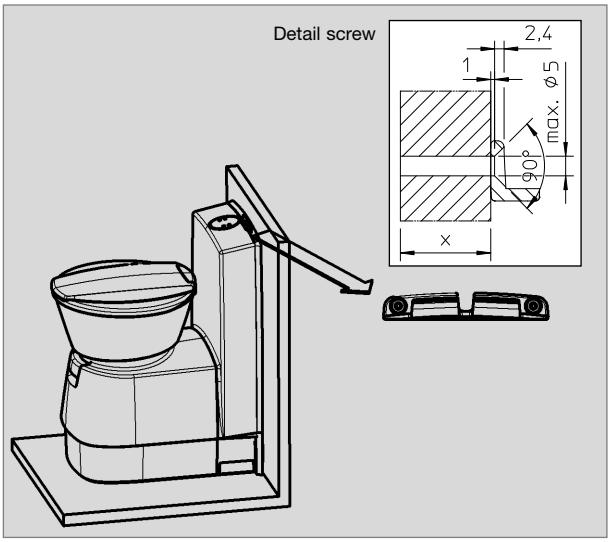

Fig. 19

Fitting height of the wall holder:

Model	a	b
CTW / CTS 4xxx	90 mm	651.5 mm
CTLP 4xxx	90 mm	479.5 mm

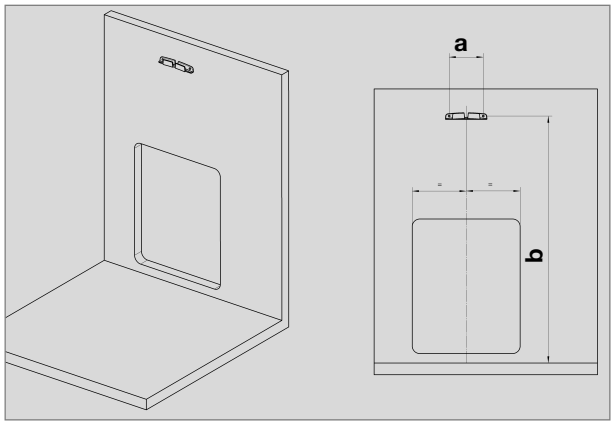

Fig. 20

4.3.2.2 Fitting the CTS 4xxx, CTW 4xxx and CTLP 4xxx toilets

Place the entire toilet module in the desired position in front of the wall holder. Lift the toilet. Then place the toilet so that the part on the side of the wall of the housing hooks into the the wall holder (Fig. 22).

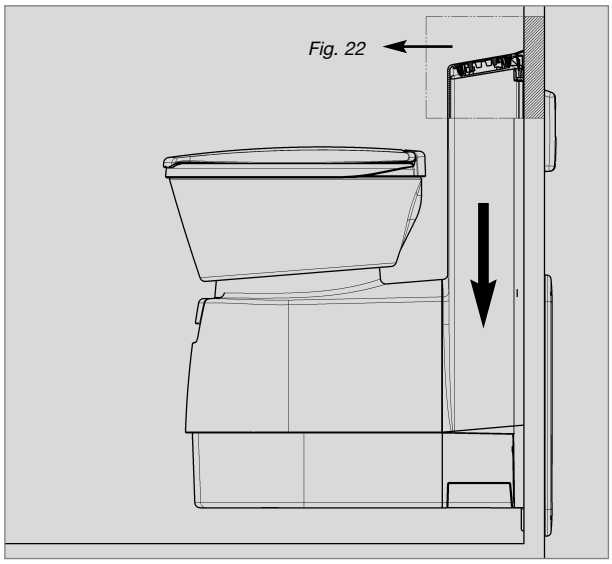

Fig. 21

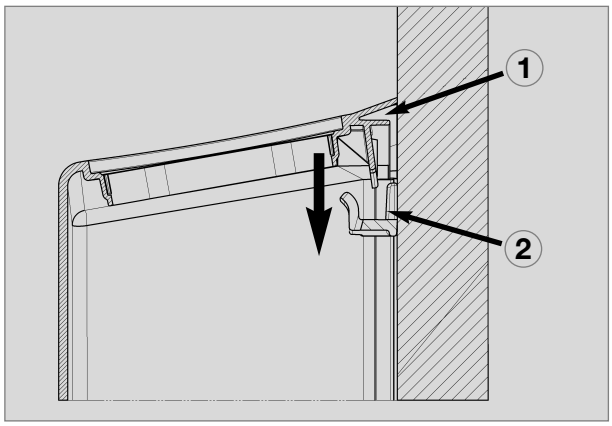

Fig. 22

1 = Wall connection console

2 = Wall holder

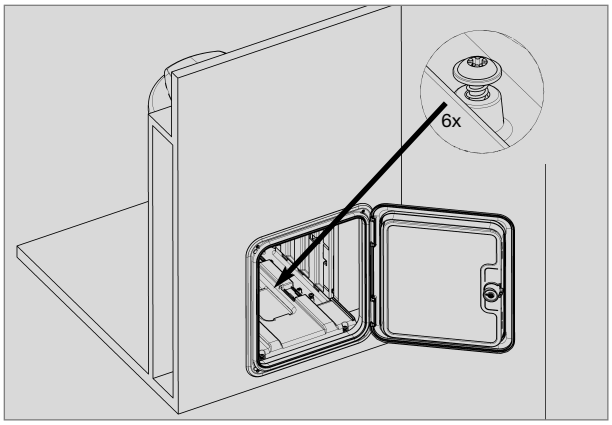

Fig. 23

If the toilet is installed in the desired position, bolt down the floor plate with the six screws enclosed and insert the mobile tank cassette.

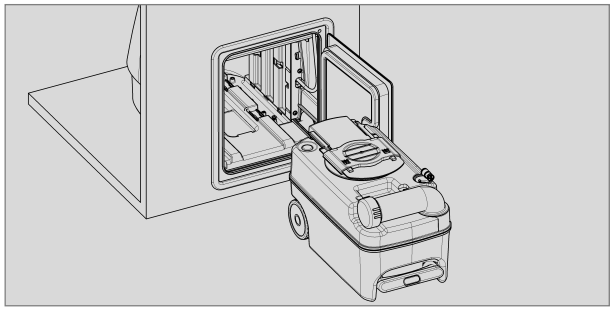

Fig. 24

4.4 Water connection

The water supply is connected via a magnet valve **(1)**, which is fitted in the toilet housing. Fit the fresh water supply pipe to the connection nozzle **(2)** with a spring clamp.

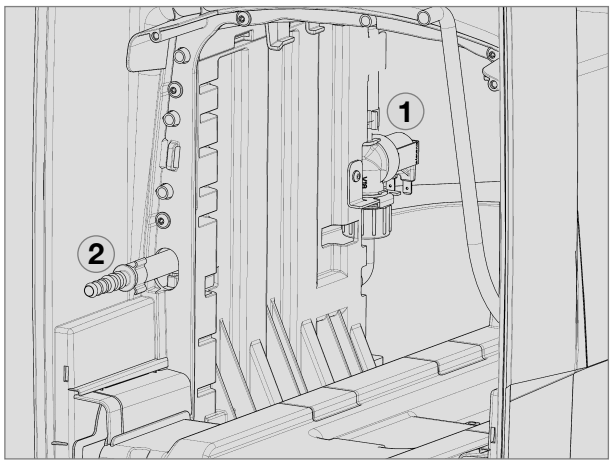

Fig. 25

Then check the leak tightness.

CAUTION!

The operating pressure range (waterpressure) of the magnet valve (1) must not exceed 6 bar.

The magnet valve will be damaged by excessive pressure.

The water is connected for all CT4xxx models as described above.

Exception: CTW 4xxx models with integrated water tank.

4.5 Flap installation

Apply the flap when using CTW 4xxx models with an integrated water tank. To install the flap, use the template **(1)**, Item 5.3.1, in order to make the aperture in the wall.

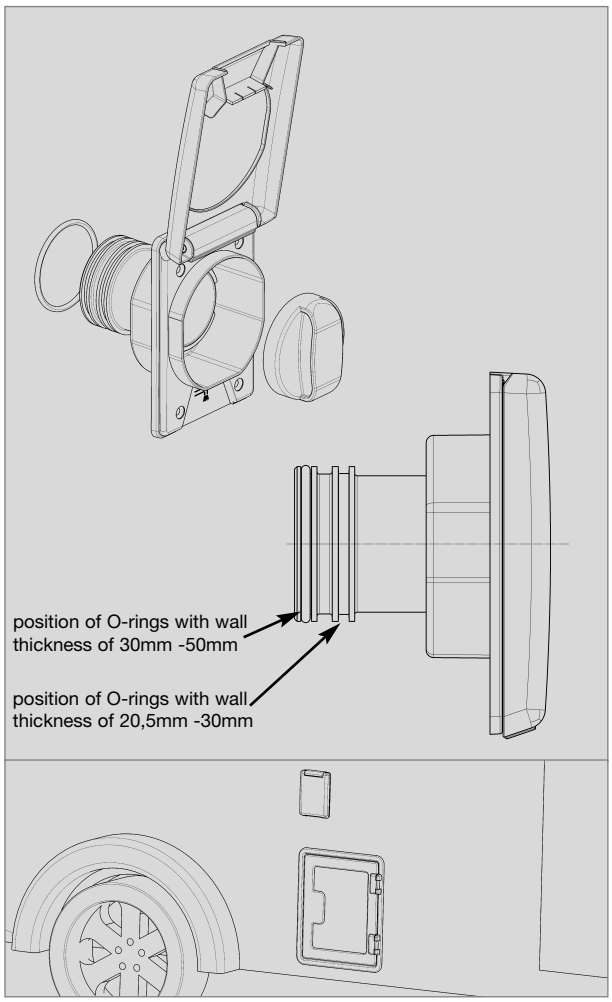

Fig. 26

Apply sealing compound between the exterior wall of the vehicle and the flap (butyl rubber). Then fit the flap on the tank and fasten the flap with screws. Lubricate the O-ring in order to prevent stiffness when connecting the filling nozzle with the top of the tank. The flap is screwed on with four counter sunk bolts (**not enclosed**).

4.6 Ventilation

4.6.1 Ventilation with SK 5

Open the duct (a) for the ventilation hose in the top area of the door frame (press out spraying varnish on the outside, drill through on the inside).

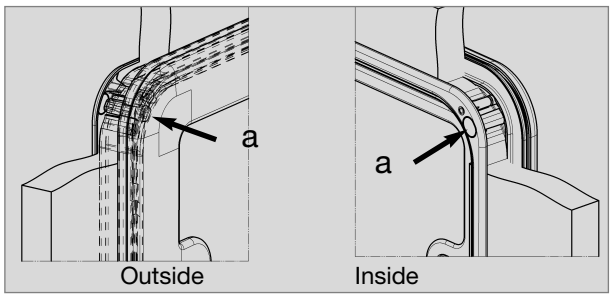

Fig. 27

Place the ventilation hose on the integrated ventilation aperture of the service door as illustrated.

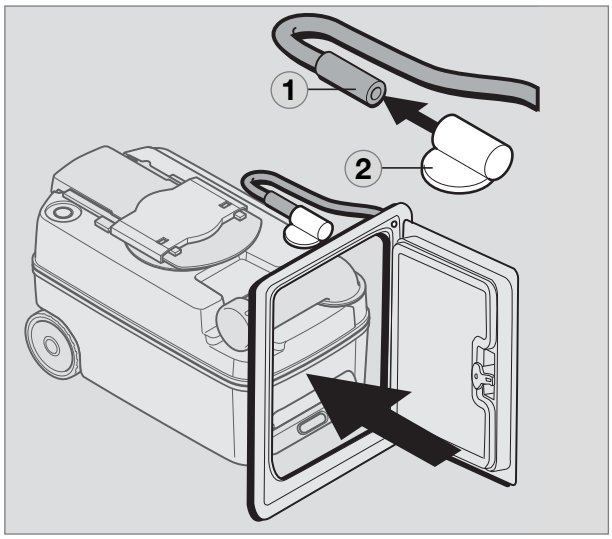

Ventilation at SK5 *Fig. 28*

4.6.2 Ventilation with SK 4

Create an aperture in the recess floor (diameter approx. 12 mm). Insert the ventilation hose into this aperture for extraction to the outside.

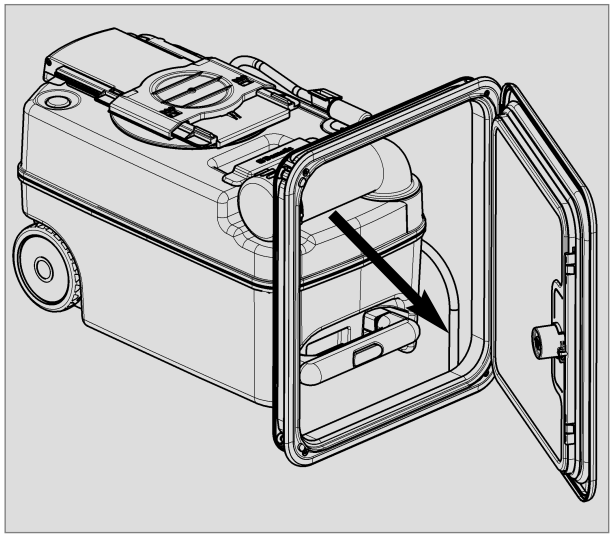

Ventilation at SK4 *Fig. 29*

The service door is optionally available.

4.7 Electric connection

4.7.1 System diagrams

4.7.1.1 General system diagram

CAUTION!

Electric connection must be carried out by trained staff.

Note the following instructions before installation of the cassette toilet:

- **Connect the toilet to a suitable power supply via the main connection block of the vehicle (Fig. 30).**
- **The toilet must not be directly connected in parallel to other consumers, otherwise malfunctions or damage to the toilet controller can occur (Fig. 31).**
- **A line fuse is not necessary as the toilet is fused internally.**

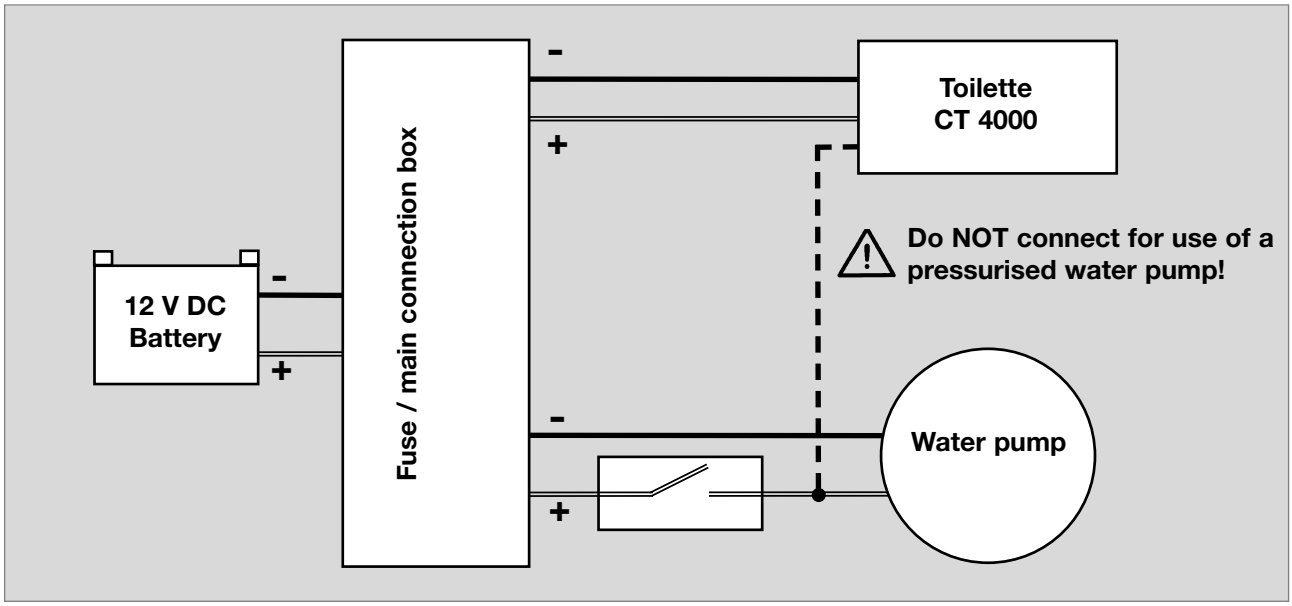

Fig. 30

CAUTION!

Do not connect toilet to the power supply directly in parallel with other consumers.

Please find circuit diagrams in Chapt. 5, annex !

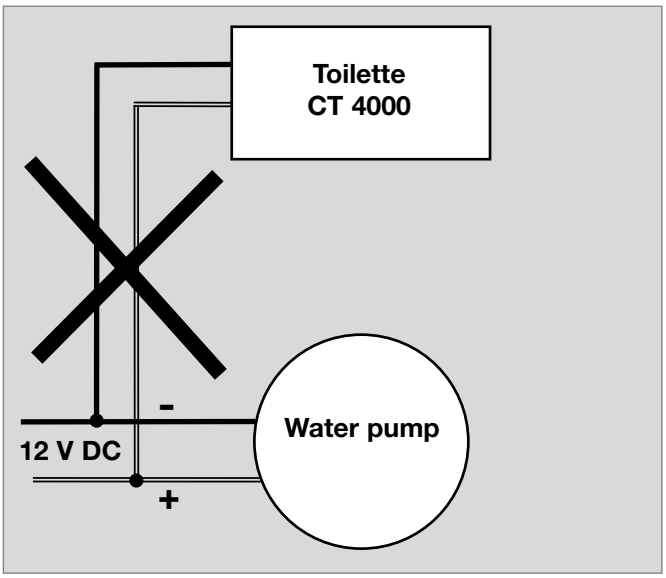

Fig. 31

4.7.1.2 System diagram (CTW 4xxx model with integrated water pump)

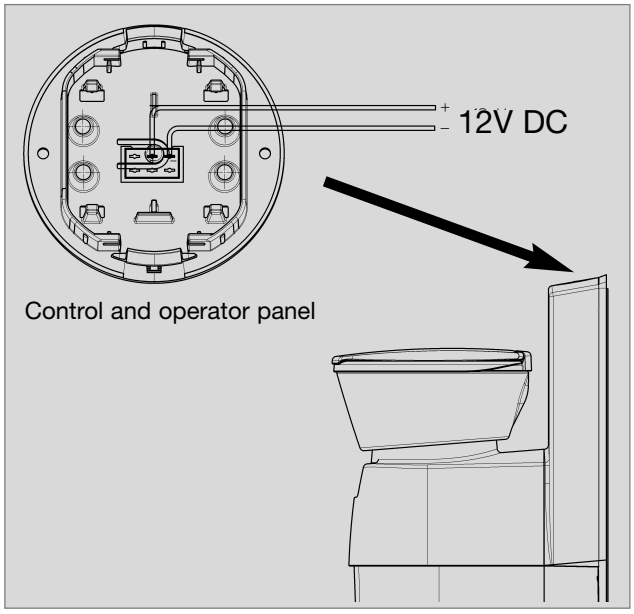

Fig. 32

Supply voltage: 12 V DC

12V connection cable profile : :
min. 0.75 mm²

Toilet control fuse : 7.5 A
(integrated automobile fuse)

Current consumption of the pump : max. 2 A

4.7.1.3 System diagrams (CT/CTS/CTLP 4xxx models with external water pump)

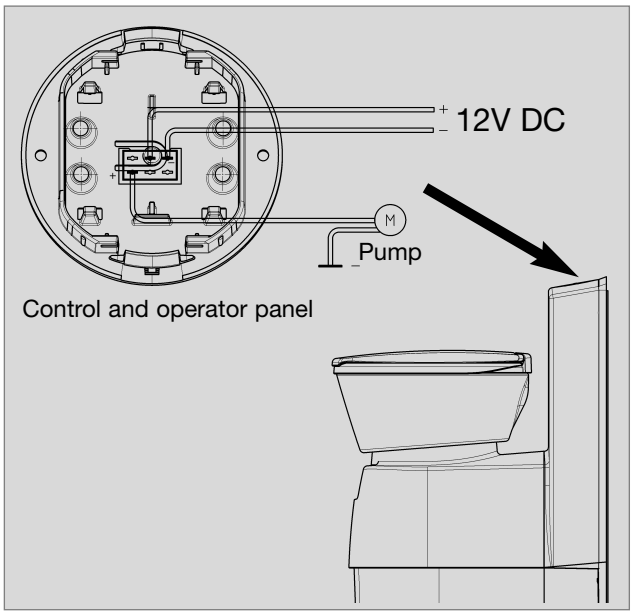

Fig. 33

Supply voltage: 12 V DC

12V connection cable profile :
min. 1.5 mm²

Toilet control fuse : 7.5 A
(integrated automobile fuse)

Current consumption of the pump : max. 5 A

CAUTION!

The external water pump must not exceed a nominal power of 60 W (12V/5A).

The external water pump is not included in the scope of delivery.

5.1 Schaltschemata / Circuit diagrams / Schémas de circuit / Kopplingsscheman

5.1.1 Schaltschema (interner Wassertank im Tankgehäuse, Modell CTW 4xxx) Circuit diagram (models with internal water tank, model CTW 4xxx) Schéma de circuit (modèles avec réservoir d'eau interne, modèle CTW 4xxx) Kopplingsschema (modell CTW 4xxx med integrerad vattentank)

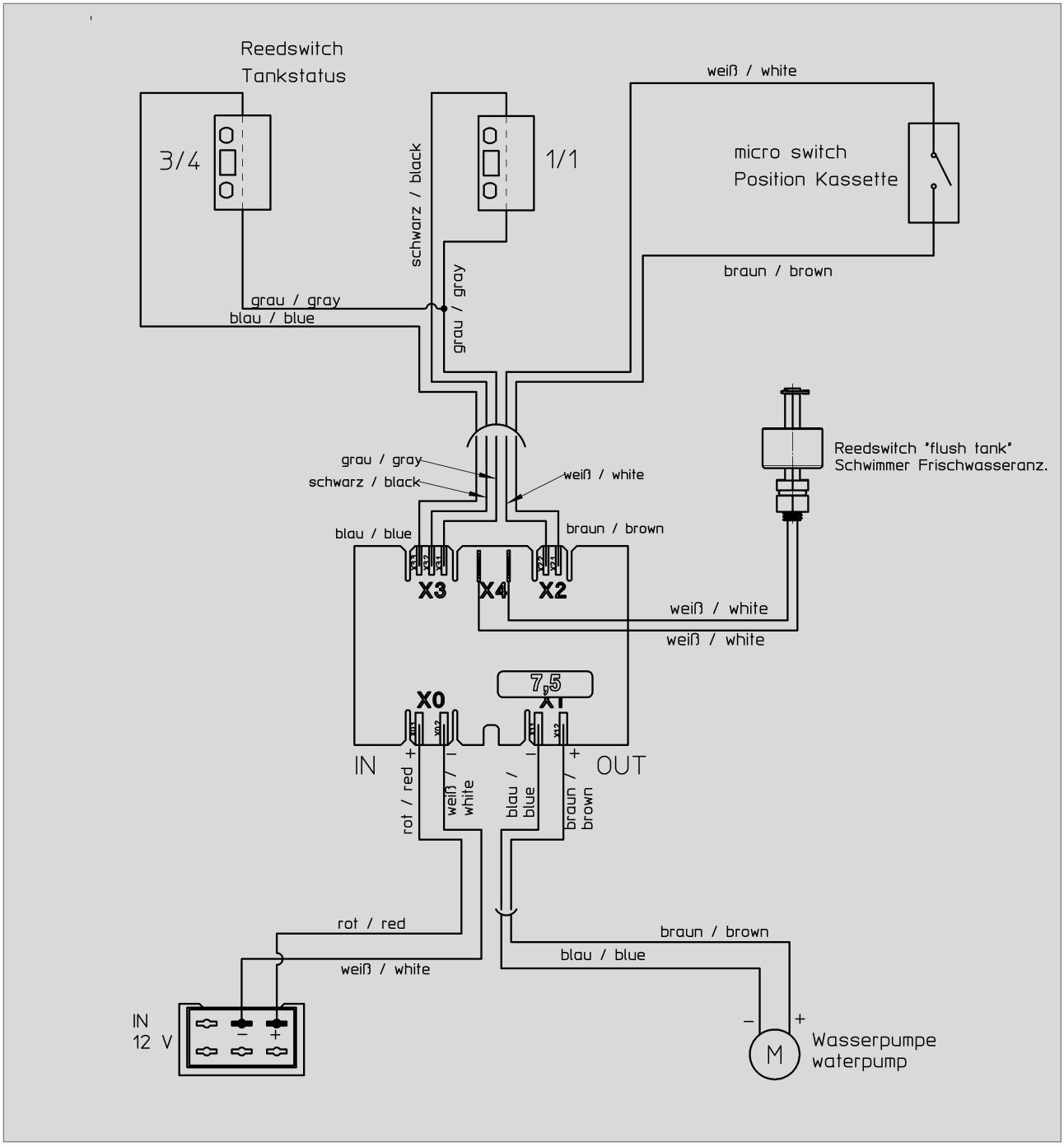

Fig. 34

5.1.2 Schaltschema (interner Wassertank und SOG-Ventilation)
Circuit diagram (models with internal water tank and SOG ventilation)
Schéma de circuit (modèles avec réservoir d'eau interne et ventilation SOG)
Kopplingsschema (modeller med integrerad vattentank och SOG ventilation)

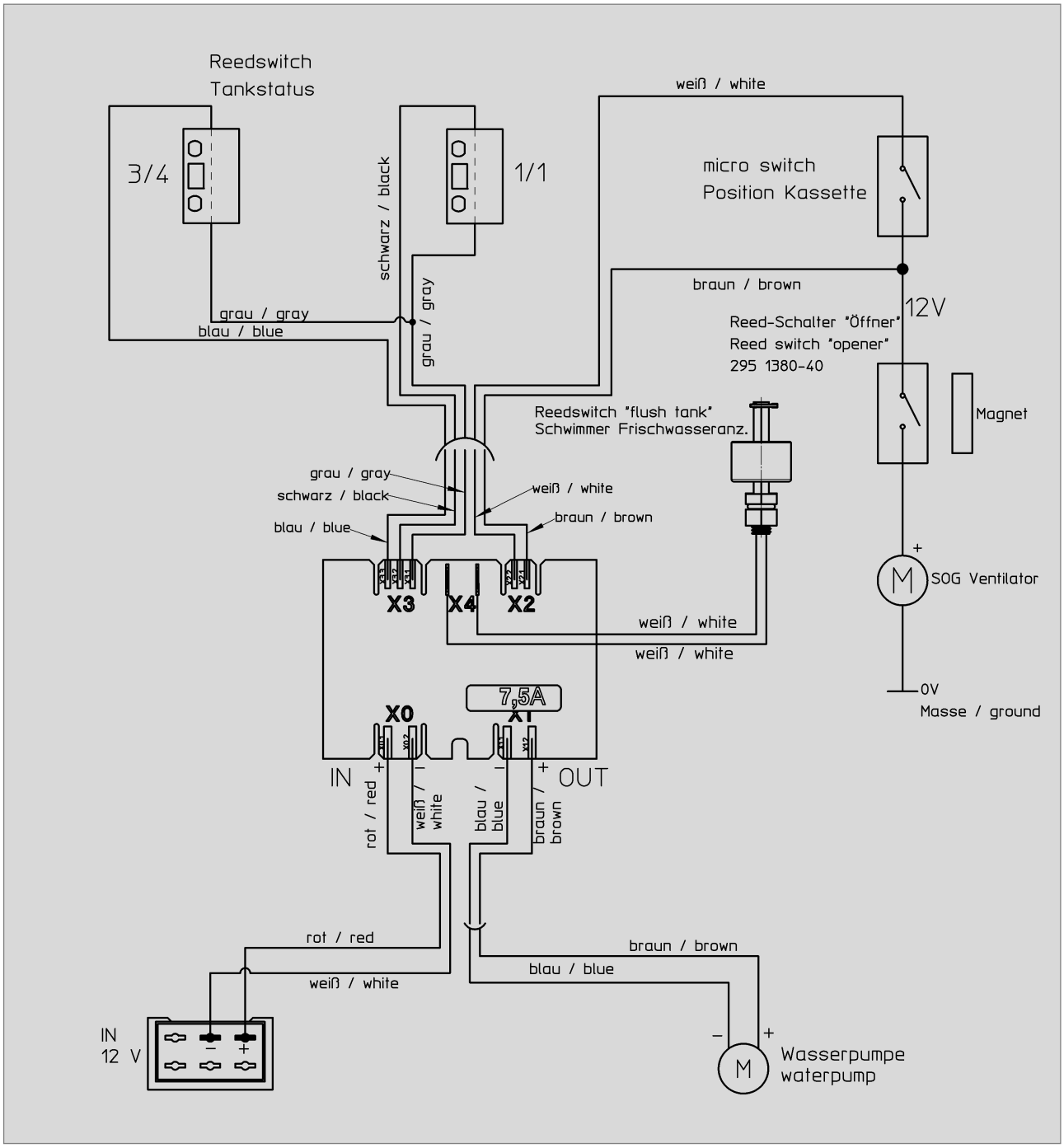

Fig. 35

5.1.3 Schaltschema (Modelle mit externem Wassertank)
Circuit diagram (models with external water tank)
Schéma de circuit (modèles avec réservoir d'eau externe)
Kopplingsschema (modeller med extern vattentank)

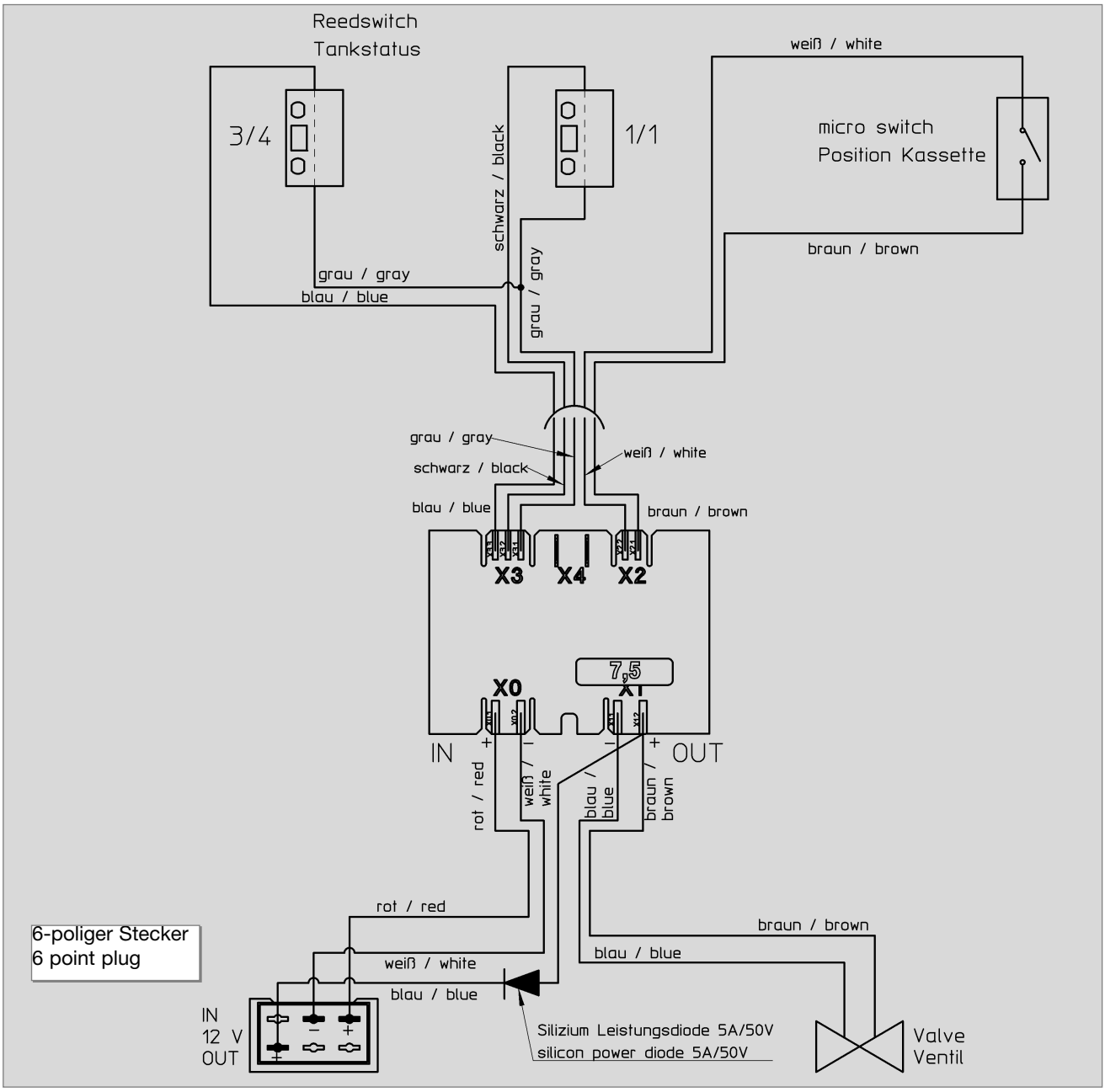

Fig. 36

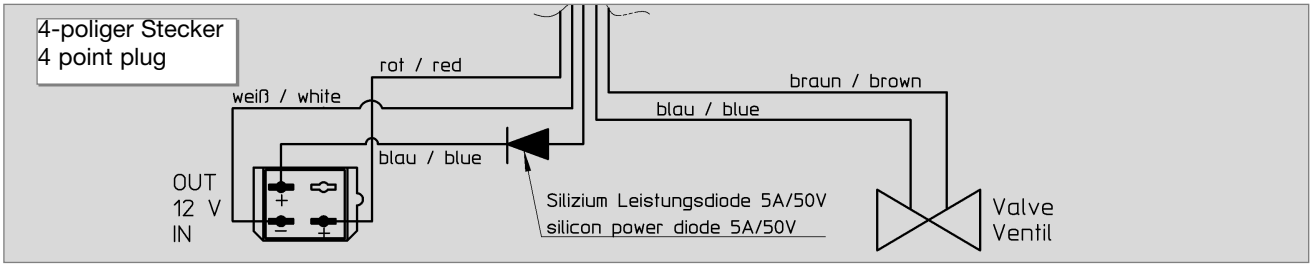

Fig. 37

5.1.4 Schaltschema (Modelle mit externem Wassertank und SOG-Ventilaton)
Circuit diagram (models with external water tank and SOG ventilation)
Schéma de circuit (modèles avec réservoir d'eau externe et venitlation SOG)
Kopplingsschema (modeller med extern vattentank och SOG ventilation)

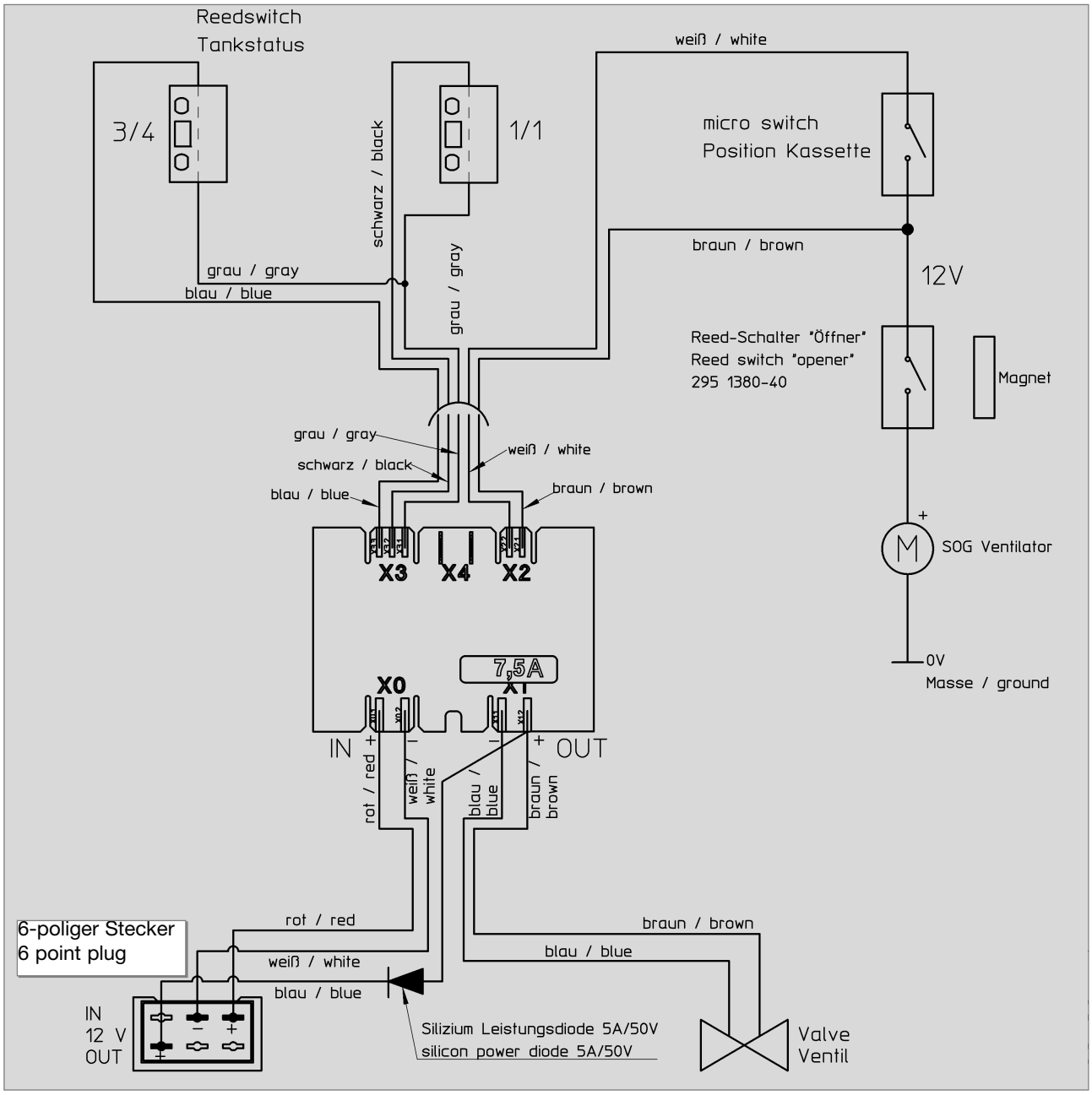

Fig. 38

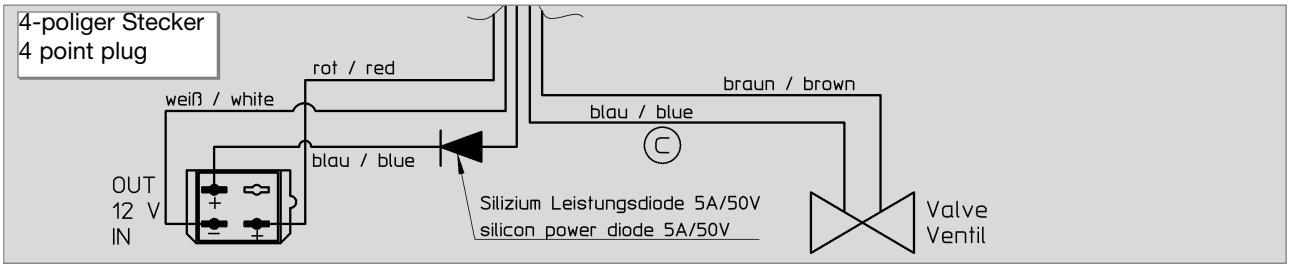

Fig. 39

5.1.5 Schaltschema (externer Wassertank) NUR FÜR AUSTRALIEN
Circuit diagram (external water tank) FOR AUSTRALIA ONLY
Schéma de circuit (réservoir d'eau externe) SEULEMENT POUR L' AUSTRALIE
Kopplingsschema (modeller med extern vattentank) ENDAST FÖR AUSTRALIEN

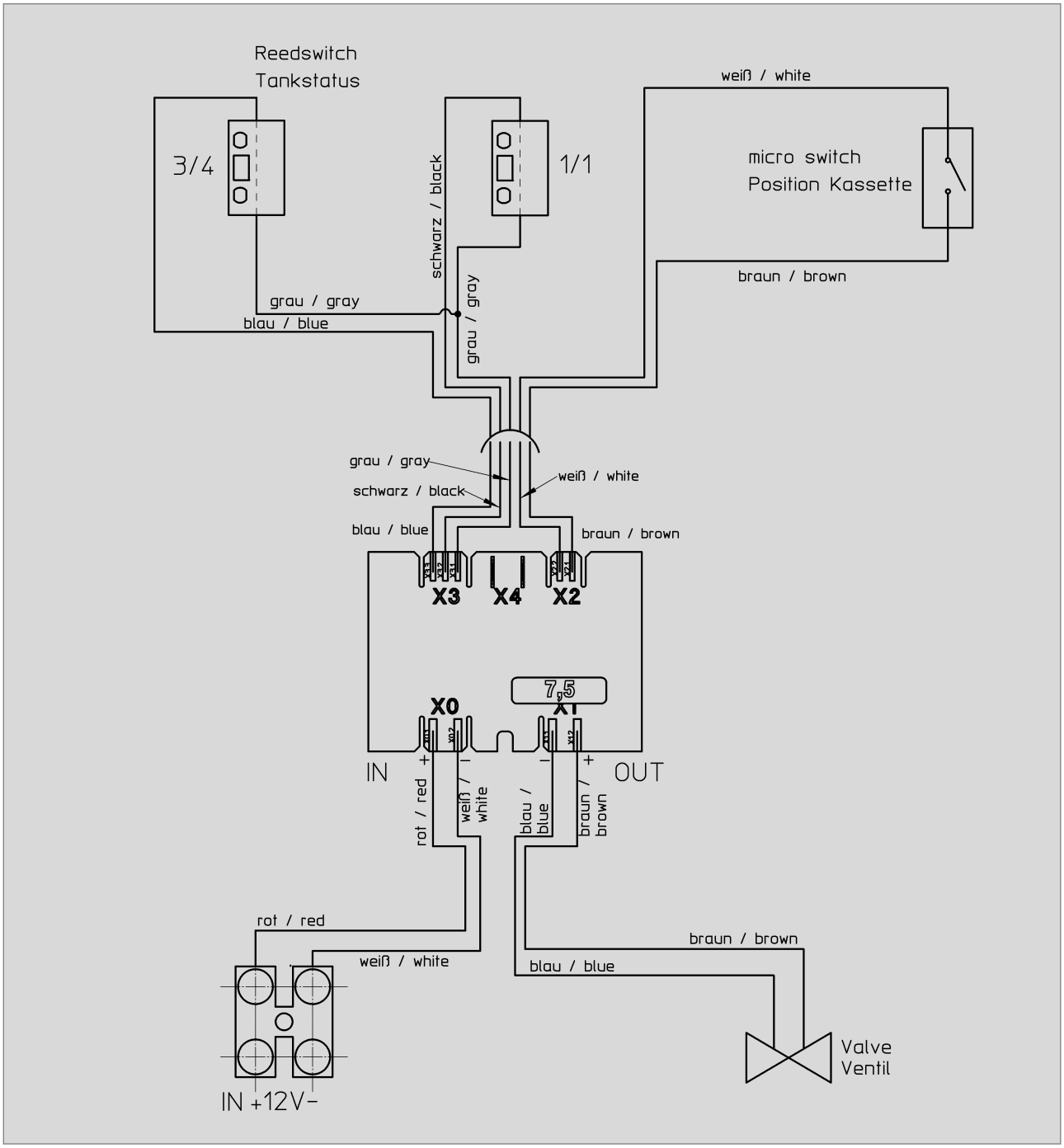

Fig. 40

5.1.6 Schaltschema (externer Wassertank und SOG-Ventilation) AUSTRALIEN
Circuit diagram (external water tank and SOG ventilation) AUSTRALIA
Schéma de circuit (réservoir d'eau externe et ventilation SOG) AUSTRALIE
Kopplingsschema (extern vattentank och SOG ventilation) AUSTRALIEN

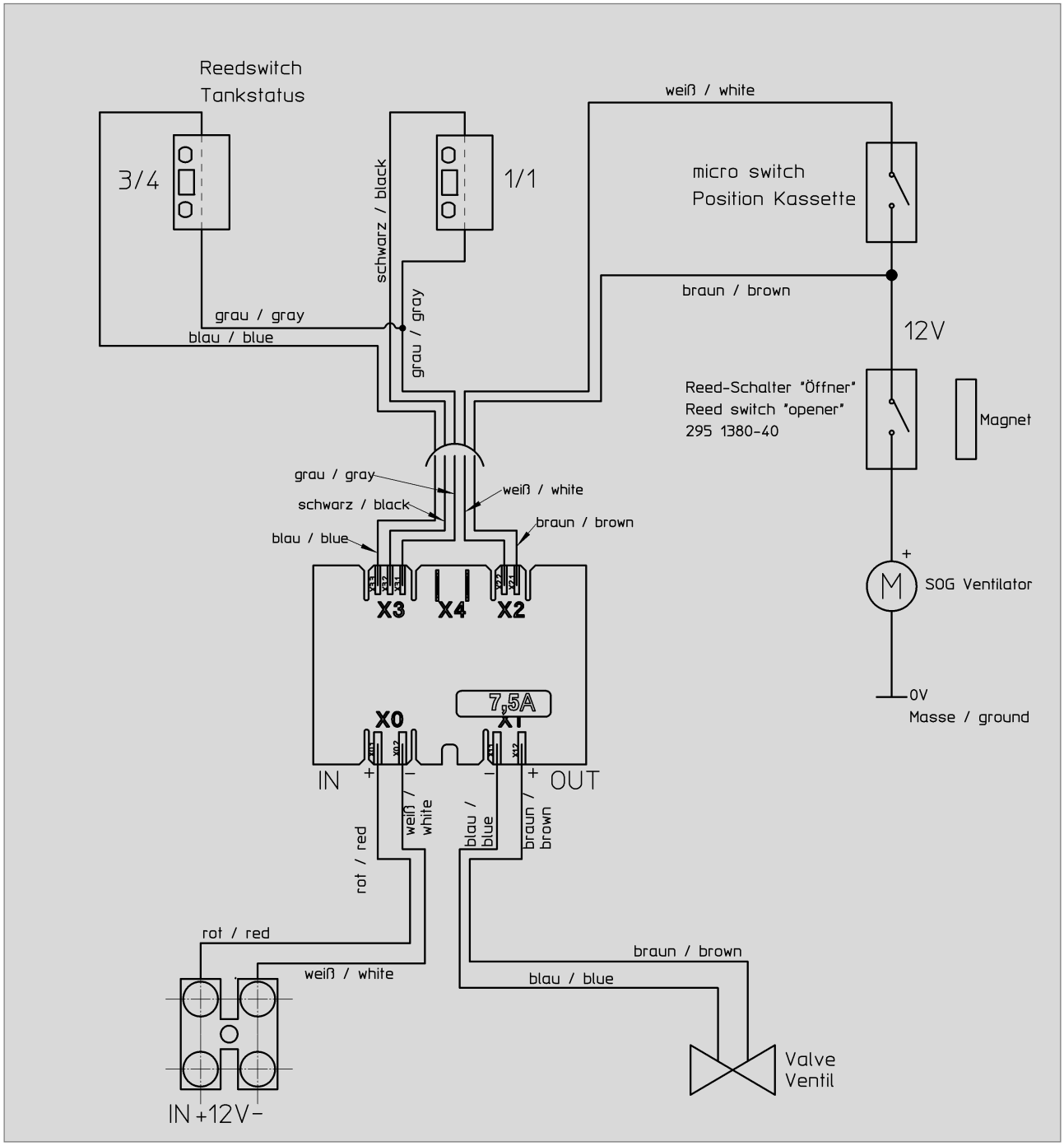

Fig. 34

5.1.7 Légende / Förklaring

Français

Reedswitch tank status /
Commutateur Reed " Etat réservoir "
(floater) Reedswitch flush tank /
Flotteur " Indicateur d'eau fraîche "
Micro switch position of cassette /
Micro-commutateur " Position cassette
Water pump / Pompe à eau
Valve / soupape

Couleurs
gray / gris
black / noir
blue / bleu
white / blanc
brown / marron

Svenska

Reedswitch tank status /
Reed-brytare "Tankstatus"
(floater) Reedswitch flush tank /
Flottör "Färskvattendisplay"
Micro switch position of cassette /
Mikro-brytare "Position kassett"
Water pump / Vattenpump
Valve / ventil

Färger
gray / grå
black / svart
blue / blå
white / vit
brown / brun

5.2 Maßskizzen / Dimensioned sketches / Croquis cotés/ Måttskisser

5.2.1 CT 4xxx

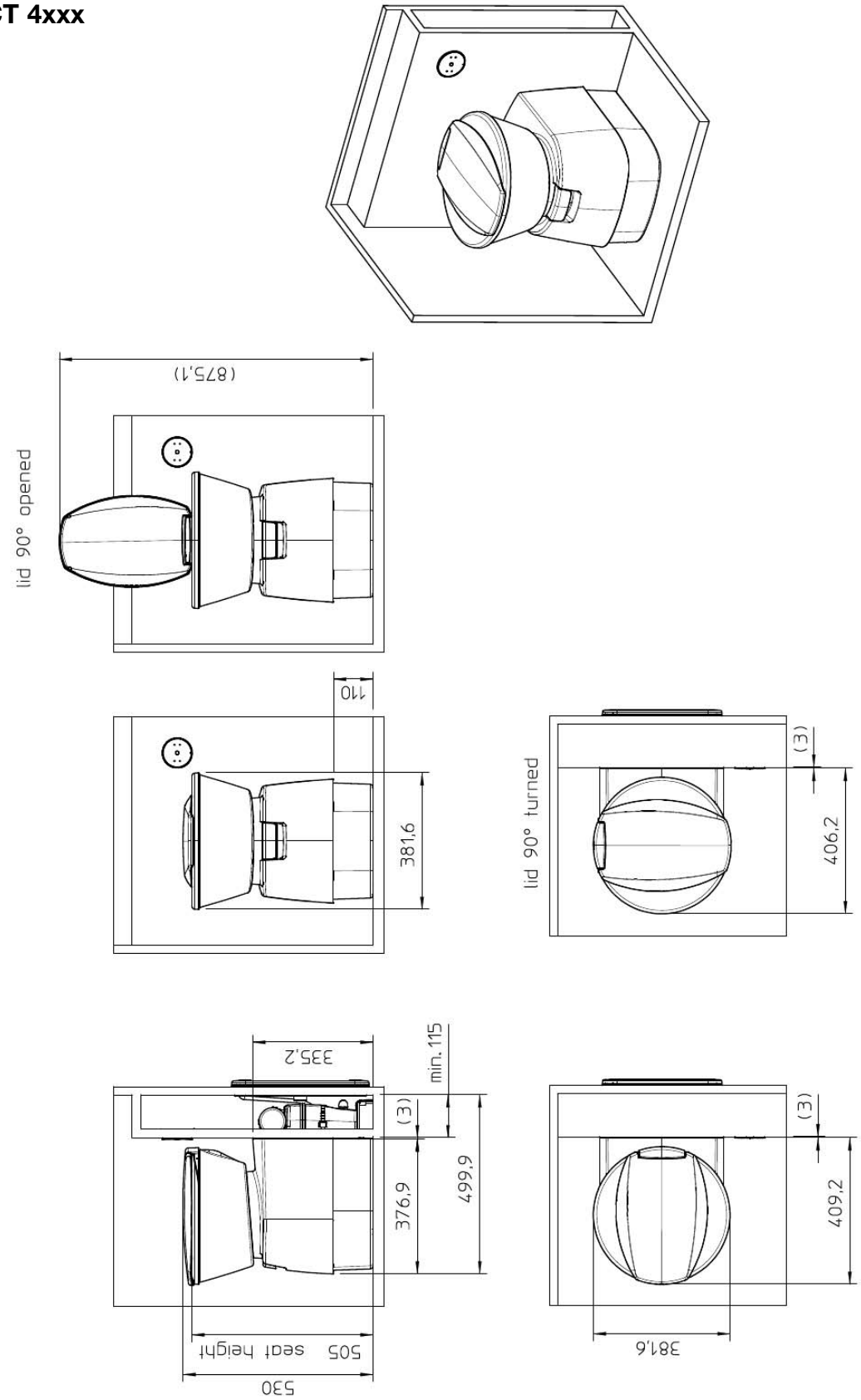

5.2.2 CTLP 4xxx

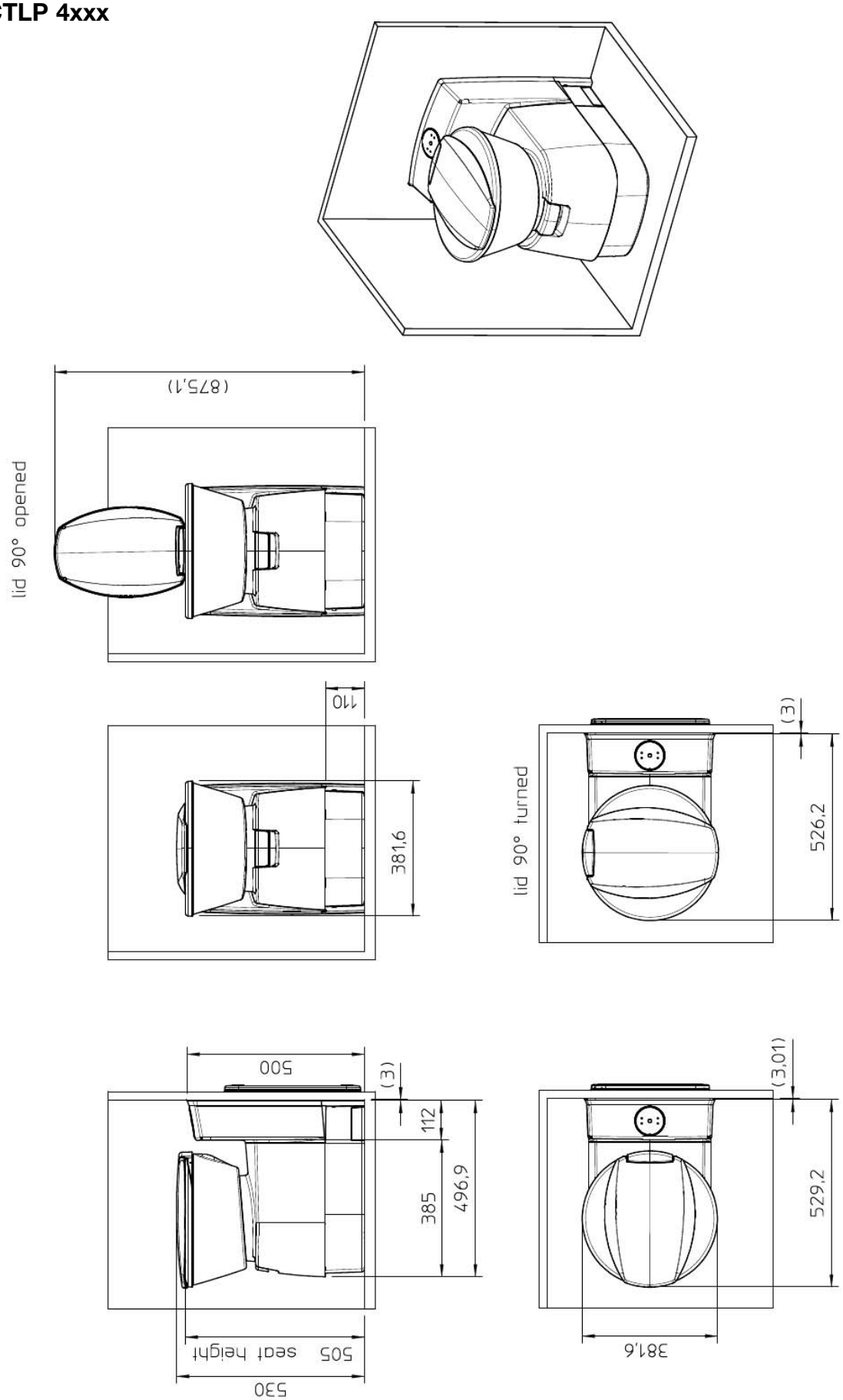

5.2.3 CTS 4xxx

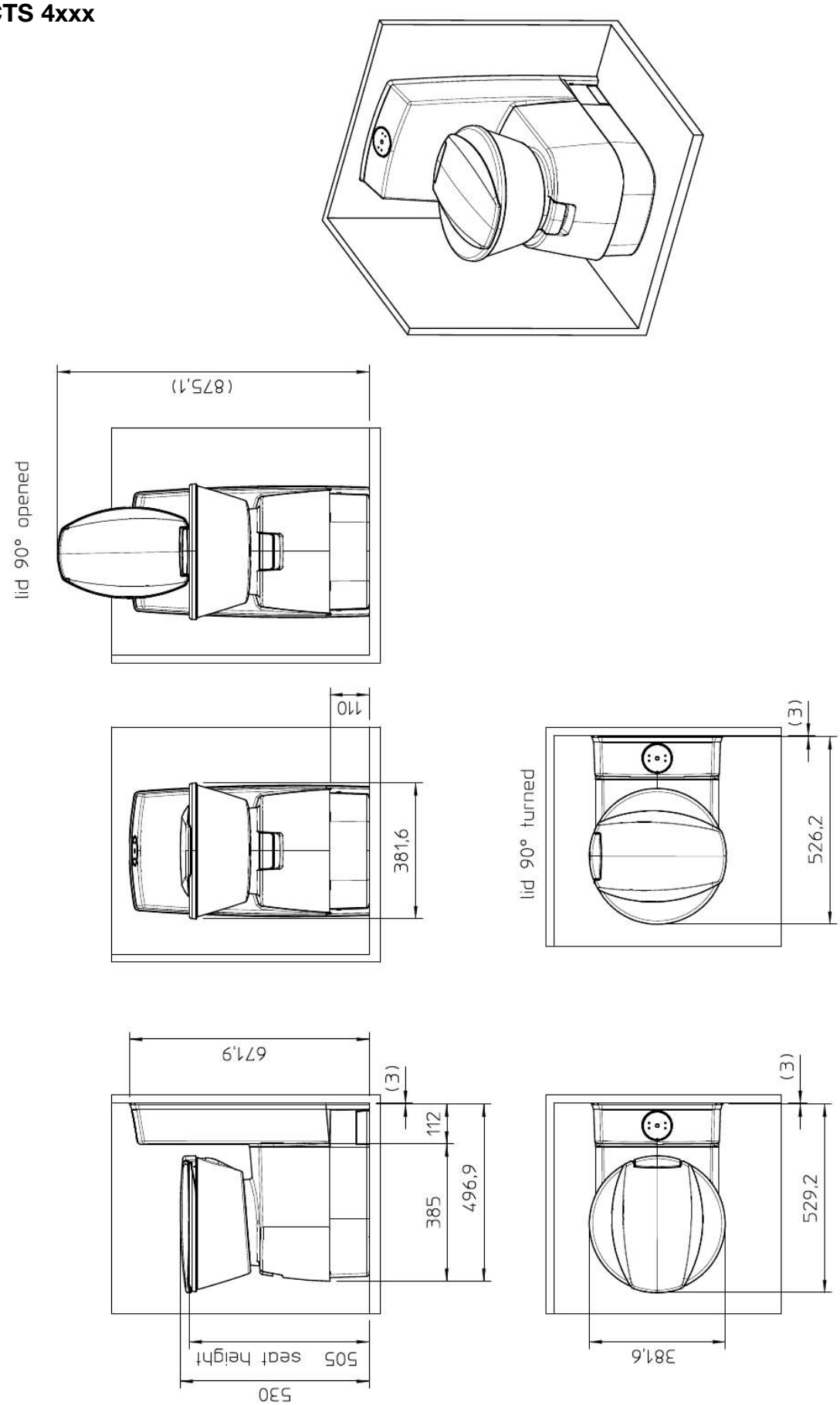
lid 90° opened
(875,1)
110
381,6
lid 90° turned
(3)
526,2
671,9
(3)
112
385
496,9
505 seat height
530
(3)
529,2
381,6

5.2.4 CTW 4xxx

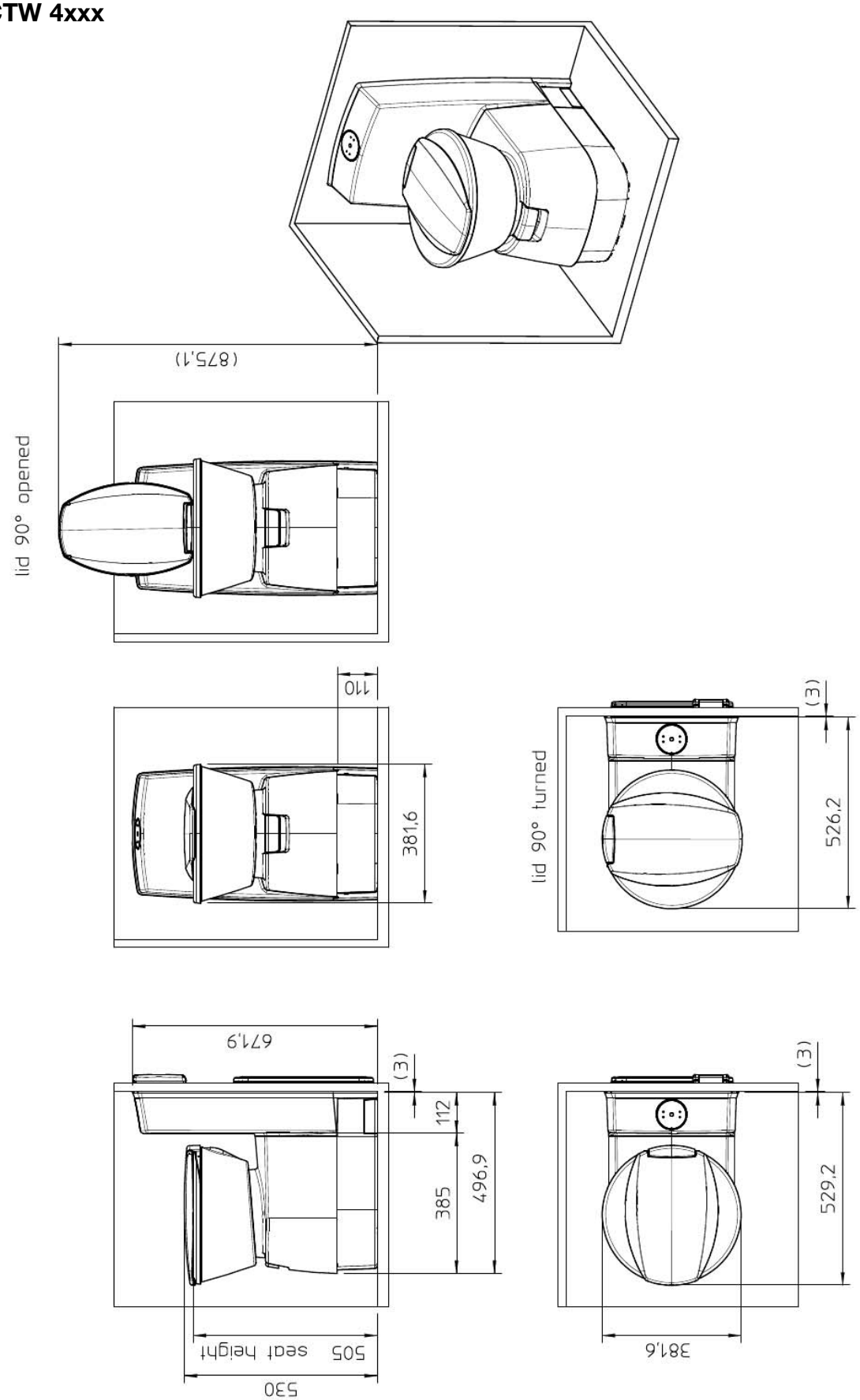
lid 90° opened
(875,1)
110
381,6
lid 90° turned
(3)
526,2
671,9
(3)
112
385
496,9
505 seat height
530
(3)
529,2
381,6

5.3 Schablonen / Templates / Gabarits / Schabloner

5.3.1 Schablone für Tankklappe (1) und Servicetüre (2) , (3)

5.3.1 Template for flap (1) and service door (2) , (3)

5.3.1 Gabarits pour le clapet de réservoir (1) et de la porte de service (2) , (3)

5.3.1 Schablon för montering tanklucka (1) och servicedörrar (2) , (3)

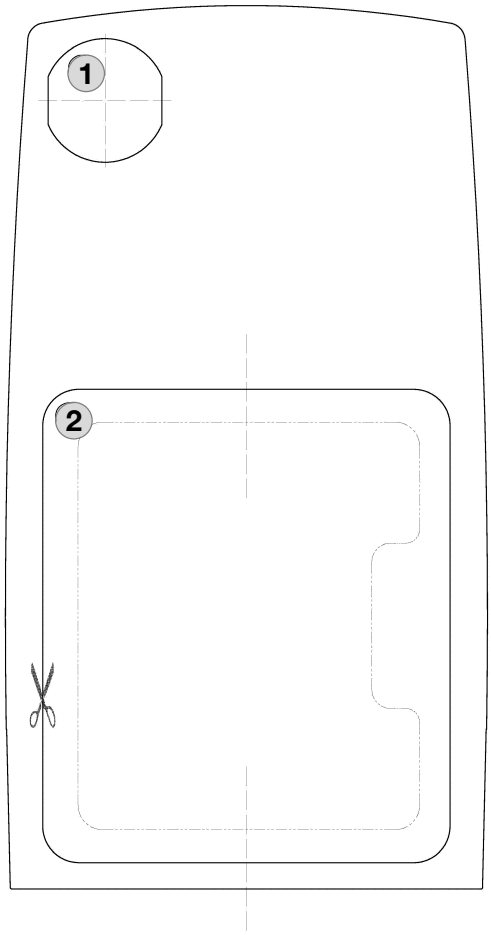

An Außenseite des Fahrzeugs anlegen !

Fit to the outside of the vehicle !

Appliquer au côté extérieur du véhicule !

Placeras på utsidan av fordonet!

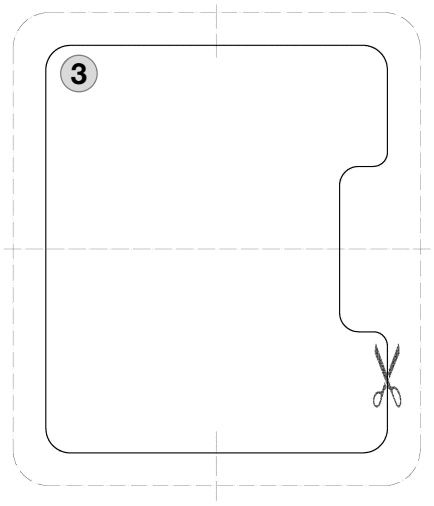

Schablonen
Templates

Schablonen stark verkleinert / Original siehe Kartonage

Template strongly minimised / original see paperboard container

Gabarits représentés en miniature/voir les originaux sur l'emballage

Schabloner kraftigt förminskade/original se förpackningen

5.3.2 Schablone (4) für Einbau Kontroll- und Bedienfeld

5.3.2 Template (4) for control and operator panel installation

5.3.2 Gabarit (4) pour le montage du panneau de commande et contrôle

5.3.2 Schablon (4) för installation av kontroll- och manöverpanelen

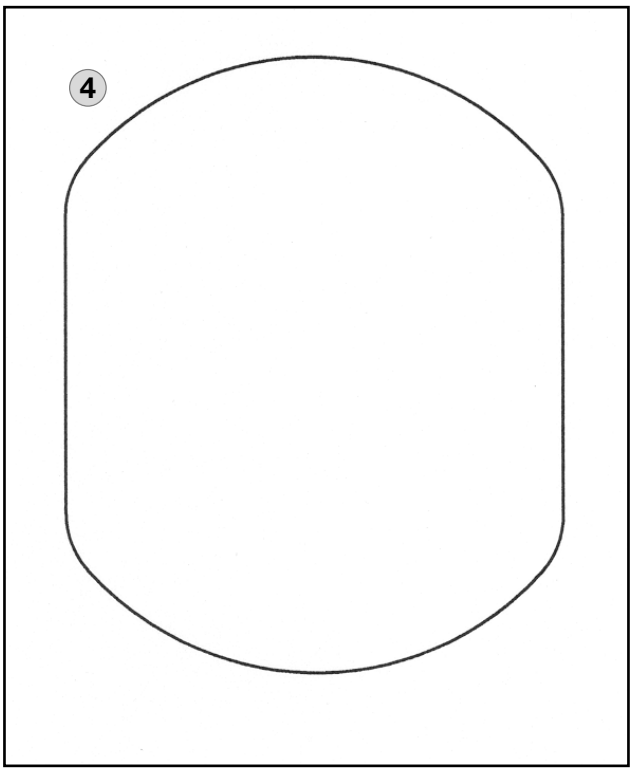

Originalgröße
Original size
Taille originale
Originalstorlek

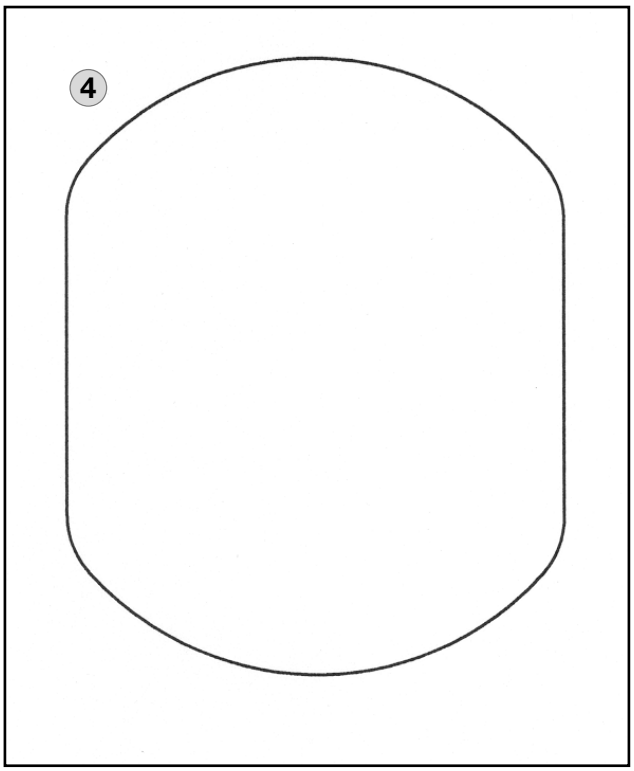

Originalgröße
Original size
Taille originale
Originalstorlek