Dometic

Installation Instructions

Cassette Toilet for Recreation Vehicles

CT 3050	CTS 3050	CTW 3050	CTLP 3050
CT 3110	CTS 3110	CTW 3110	CTLP 3110

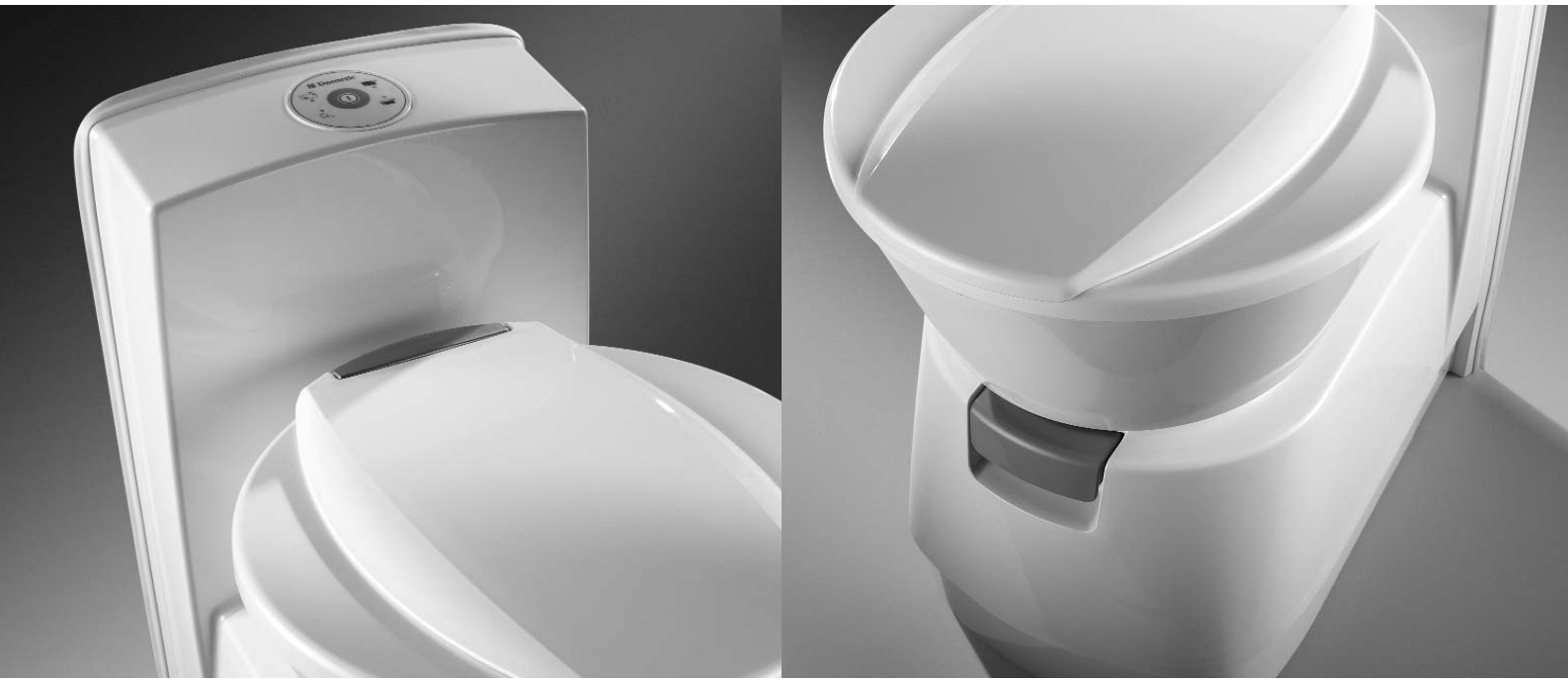

EN **INSTALLATION INSTRUCTIONS** CASSETTE TOILET

CE e 1

T.B. MBA 01/2008

N 1-1

242 6011-64en

English

Dometic GmbH
In der Steinwiese 16
D-57074 Siegen

www.dometic.com

© Dometic GmbH - 2007 - Subject to change without prior notice - Printed in Germany

Table of contents

1.0 General 4
1.1 Guide to these operating instructions 4
1.2 Copyright protection 4
1.3 Explanation of symbols used in this manual 4
1.4 Limitation of liability 5
1.5 Warranty 5
1.6 Environmental notices 5
1.7 Declaration of conformity 5

2.0 Safety instructions 6
2.1 Intended use 6
2.2 Installation notices 6
2.3 Standards and regulations 6

3.0 Description of model 7
3.1 Model identification 7
3.2 Toilet identification label 7
3.3 Explanation of components 7

4.0 Installation of toilet 8
4.1 Installing the service door 8
4.2 Create wall aperture 8
4.3 Installing the toilet 8
4.3.1 Installing the CT 3xxx toilet 9
4.3.1.1 Fitting the CT 3xxx toilet 9
4.3.1.2 Installing the control and operator panel of the CT 3xxx toilet 10
4.3.2 Installing the CTS 3xxx, CTW 3xxx and CTLP 3xxx toilets 11
4.3.2.1 Fitting the wall holder 11
4.3.2.2 Fitting the CTS 3xxx, CTW 3xxx and CTLP 3xxx toilets 12
4.4 Water connection 13
4.4.1 Connecting the water supply for the CT 3xxx toilet 13
4.4.2 Water connection for the CTS 3xxx, CTW 3xxx and CTLP 3xxx models 13
4.5 Ventilation 14
4.6 Electric connection 15
4.6.1 System diagrams 15
4.6.1.1 CTW 3xxx system diagram 15
4.6.1.2 CT/ CTS/ CTLP 3xxx system diagrams 16
4.6.2 Circuit diagrams 17
4.6.2.1 Circuit diagram (models with internal water tank) 16
4.6.2.2 Circuit diagram (models with external water tank) 18
4.7 Annex 20
4.7.1 Dimensioned sketches 20
4.7.1.1 CT 3xxx 21
4.7.1.2 CTLP 3xxx 21
4.7.1.3 CTS/CTW 3xxx 20
4.7.2 Templates 23
4.7.2.1 Template 1 for control and operator panel installation 23

1.0 General

1.1 Guide to these installation instructions

Before installing the toilet read and understand the contents of this manual.

These instructions provide you with the necessary guidance for the proper installation of the toilet. **Observe the safety instructions in particular.** Observing the instructions and handling recommendations is important for dealing with the toilet safely and for protecting you from injury and the toilet from damage. You must understand what you have read before you carry out a task.

1.2 Copyright protection

The information, texts and illustrations in these instructions are copyright protected and are subject to industrial property rights. No part of these instructions may be reproduced, copied or utilised in any other way without written authorisation by Dometic GmbH, Siegen.

1.3 Explanation of symbols used in this manual

Warning notices

Warning notices are identified by symbols. A supplementary text gives you an explanation of the degree of danger.
Observe these warning notices rigorously. You will thus protect yourself and other people from injury, and the sanitation system from damage.

CAUTION!

CAUTION **indicates a potentially hazardous situation which may result in minor or moderate injury if the given instructions are not adhered to.**

CAUTION!

CAUTION **(used without the safety alert symbol) indicates a potentially hazardous situation which may result in damage to the appliance if the given instructions are not adhered to.**

Information

INFORMATION **gives you supplementary and useful guidance.**

Environmental tip

Environmental tip **gives you useful guidance for saving energy and disposal of the appliance.**

1.4 Limitation of liability

All information and guidance in these operating instructions were prepared after taking into consideration the applicable standards and regulations as well as the current state of the art. **Dometic** reserves the right to make changes at any time which are deemed to be in the interest of improving the product and safety.
Dometic will assume no liability for damage in the case of :

- non-observation of the operating instructions
- application not in accordance with the regulations or provisions
- use of non-original spare parts
- improper modifications and interferences to the appliance

1.5 Warranty

Warranty arrangements are in accordance with EC Directive 44/1999/CE and the normal conditions applicable for the country concerned. For warranty or other maintenance, please contact our customer services department. Any malfunction due to improper use is not covered by the warranty. The warranty does not cover any modifications to the appliance or the use of **non-original Dometic parts**. The warranty does not apply if the installation and operating instructions are not adhered to and no liability shall be entertained.

1.6 Environmental notices

Use of sanitary additives

Um die stoffliche Verwertung der recyclingfähigen Verpackungsmaterialien sicherzustellen, sind diese den ortsüblichen Sammelsystemen zuzuführen. Das Gerät ist einem entsprechenden Entsorgungsunternehmen zu überlassen, das eine Verwertung der recyclingfähigen Anteile und die ordnungsgemäße Entsorgung des Restes gewährleistet.

1.7 Declaration of conformity

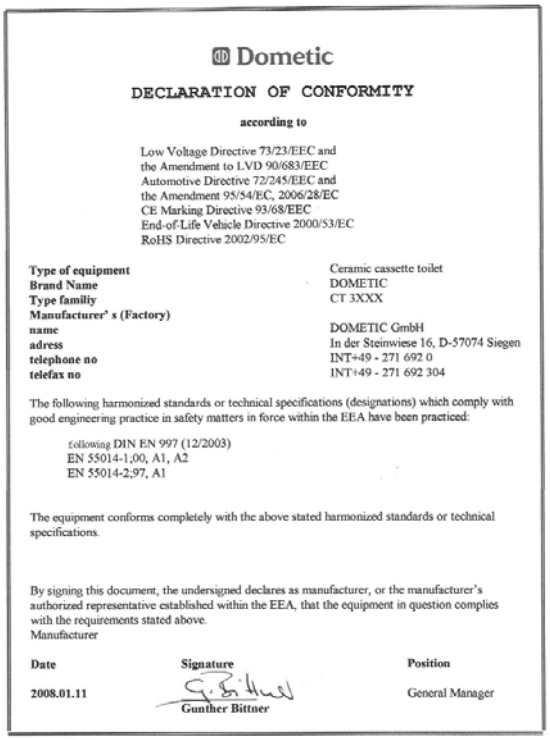

Dometic

DECLARATION OF CONFORMITY

according to

Low Voltage Directive 73/23/EEC and
the Amendment to LVD 90/683/EEC
Automotive Directive 72/245/EEC and
the Amendment 95/54/EC, 2006/28/EC
CE Marking Directive 93/68/EEC
End-of-Life Vehicle Directive 2000/53/EC
RoHS Directive 2002/95/EC

Type of equipment	Ceramic cassette toilet
Brand Name	DOMETIC
Type familiy	CT 3XXX
Manufacturer' s (Factory)	
name	DOMETIC GmbH
adress	In der Steinwiese 16, D-57074 Siegen
telephone no	INT+49 - 271 692 0
telefax no	INT+49 - 271 692 304

The following harmonized standards or technical specifications (designations) which comply with good engineering practice in safety matters in force within the EEA have been practiced:

following DIN EN 997 (12/2003)
EN 55014-1;00, A1, A2
EN 55014-2;97, A1

The equipment conforms completely with the above stated harmonized standards or technical specifications.

By signing this document, the undersigned declares as manufacturer, or the manufacturer's authorized representative established within the EEA, that the equipment in question complies with the requirements stated above.
Manufacturer

Date	Signature	Position
2008.01.11	Gunther Bittner	General Manager

2.0 Safety instructions

2.1 Intended use

This toilet is designed for installation in recreation vehicles such as caravans or motorhomes.

2.2 Installation notes

The toilet must be in principle installed so that it is accessible for maintenance work, can be easily installed and dismantled and removed from the vehicle without great effort.

CAUTION!

The toilet must be installed by trained staff only.

2.3 Standards and regulations

Installation and connection of the sanitation system must comply with the latest technical regulations, as follows:

- **The electrical installation must comply with national and local regulations..**
- **European standards**
  EN 1645–1, EN 1646–1,EN 1648–1 ,
  EN 1648–2

3.0 Description of model

3.1 Model identification

Example :

CT (S) (W) (LP) 3 x x x

Cassette Toilet

Model range

S = free-standing without flush water tank,with console

W = free-standing with integrated flush water tank

LP = Low Profile, low console

3.2 Toilet identification label

The identification label contains all important details. You can read off from this the model identification, the product number and the serial number. You will find the identification label within the cassette housing after remo–ving the cassette.

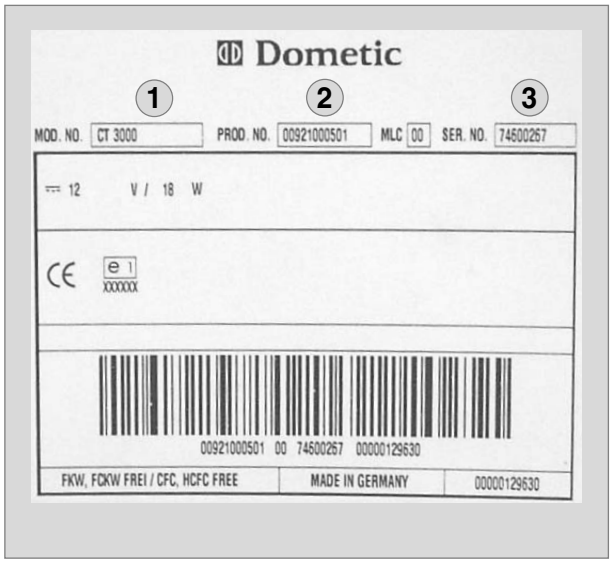

Fig. 1

1 = Model number
2 = Product number
3 = Serial number

3.3 Explanation of components

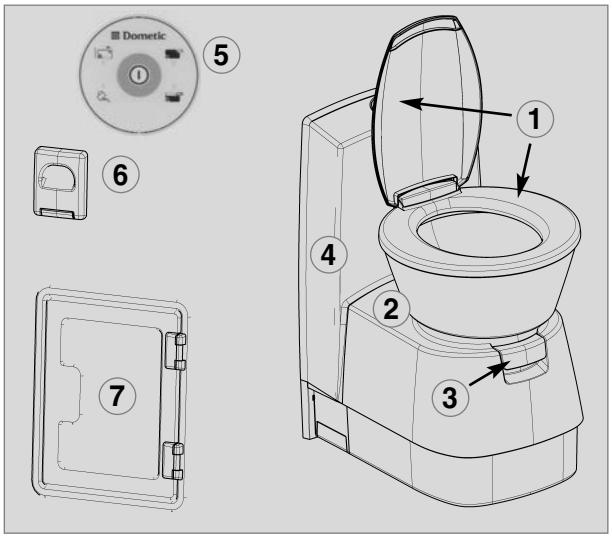

Fig. 2

1 = Removable cover and seat
2 = Toilet bowl
3 = Emptying blade for the toilet bowl
4 = Console for water tank
5 = Level indicator / control panel (flush)
6 = Flap / Fresh water filler plug
7 = Service door

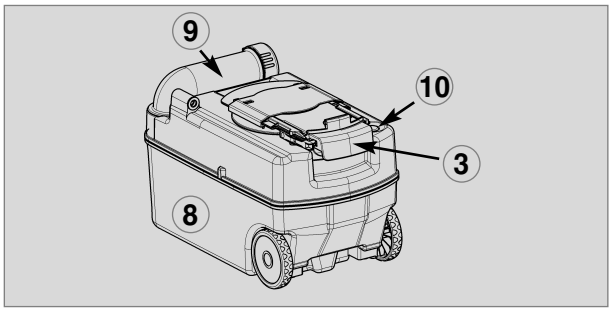

Fig. 3

8 = Cassette tank (capacity 19 l)
9 = Pour out spout
10 = Vent button for emptying

4.0 Installing the toilet

4.1 Installing the service door

The description for the installation of the service door can be found in the document supplied (Dometic Seitz SK 5) (optional/depending on model).

4.2 Create wall aperture

Apply an aperture for the cassette in the wall with the dimensions y^{min} =12.5 mm and y^{max} = 28 mm; w = 310 mm and h = 360 mm. The x value results from the toilet installation. Observe the position of the service door.

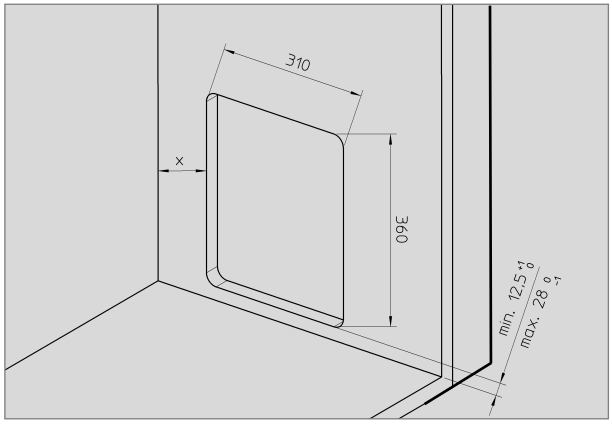

Fig. 4

4.3 Installing the toilet

CAUTION!

All components of the system must be installed in frost-protected areas. In minus temperatures there is a risk of damage due to frost.

Install the toilet according to the description of the respective model. Allow sufficient space so as not to limit the operation of the emptying valve.

Install the toilet against an upright wall only.

When installing the toilet in a wet room, we recommend connecting the toilet with the shower tub. The toilet pedestal is fitted with a projecting flange in order to cover the top rim of the shower tub.

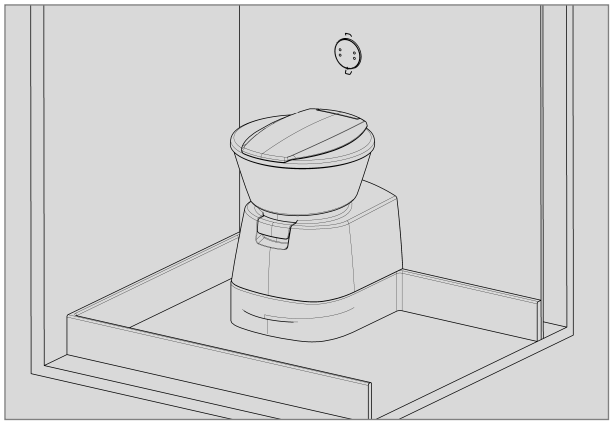

Fig. 5

4.3.1 Installing the CT 3xxx toilet

The free-standing CT 3xxx model has no integrated water tank. Install this model so that the wall behind it can absorb the control panel of the toilet, the electric connections and the water tank, if applicable. It is ideal to set a box in front of the room wall, as illustrated in Fig. 6. Install the control and operator panel in immediate proximity to the toilet (see Section 4.3.1.2).

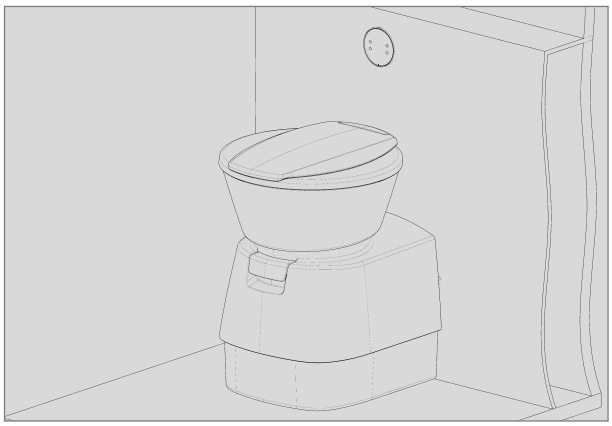

Fig.6

Note that the cassette projects 120 mm (a) out of the cassette housing (Fig. 7). The pedestal height (b) ranges from 50 to 110 mm, depending on the model.

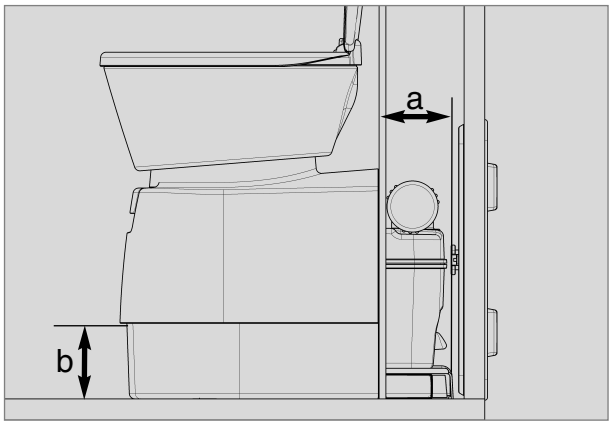

Fig. 7

4.3.1.1 Fitting the CT 3xxx toilet

Once the toilet is installed in the desired position, bolt down the floor plate with the four screws (enclosed) (Fig. 8).

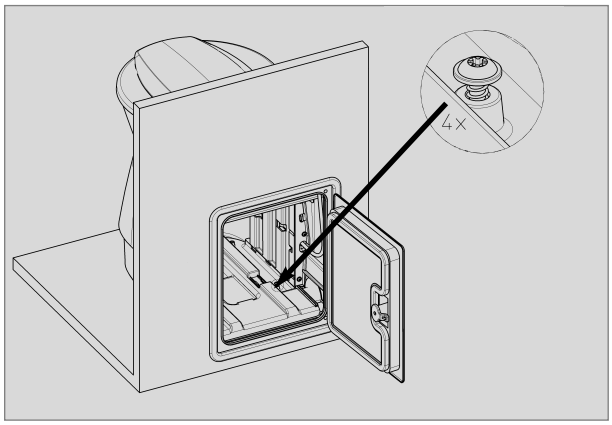

Fig. 8

Then attach the toilet housing (with no more than 7 screws) to the wall (Fig. 9).

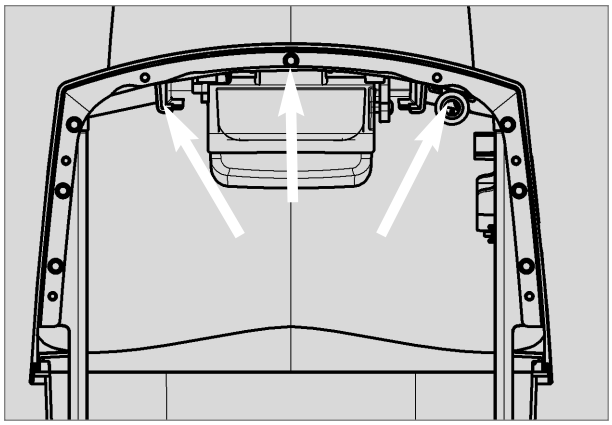

Fig. 9

Screws d = 4.2 mm

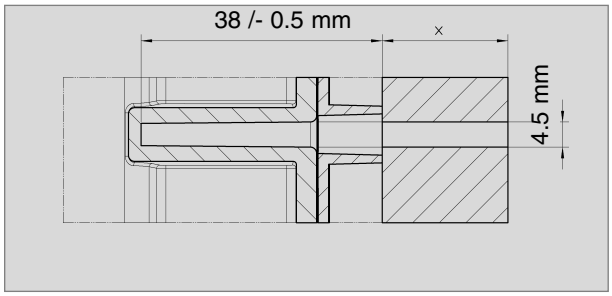

Fig. 10

4.3.1.2 Installing the control and operator panel of the CT 3xxx toilet

Install the control and operator panel for the CT 3xxx toilet in an easily accessible position on the wall. First cut the aperture in the wall (Fig. 12). Use **true-to-scale template 1** to make the wall aperture (see Item 4.7.2.1).

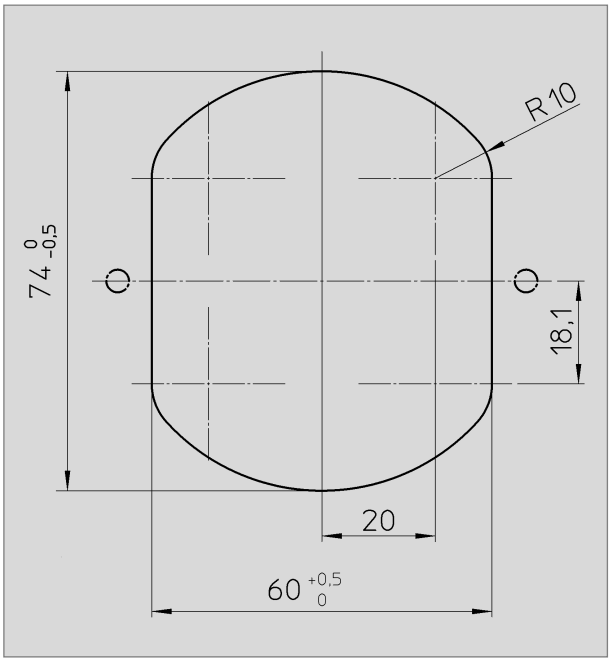

Fig. 11

In order to insert the control panel in the wall aperture, press the holding springs (1) of the control and operator panel back.

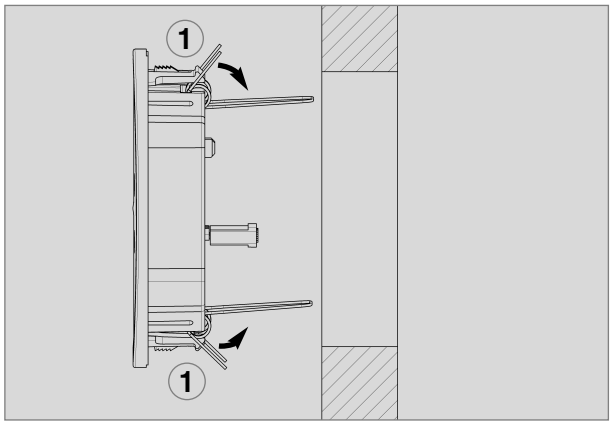

Fig. 12

Connect the electric cables on the couplers to install the control and operator panel (are supplied separately).

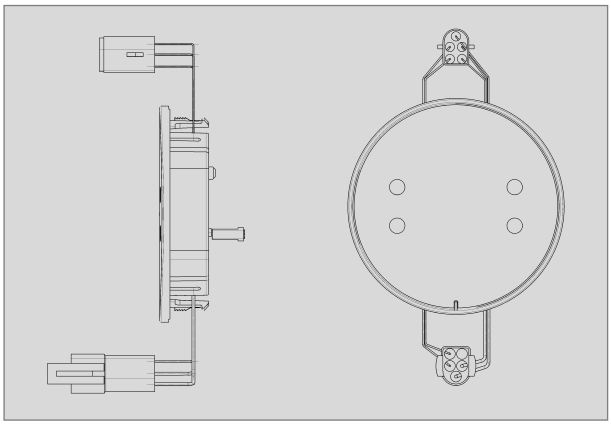

Fig. 13

4.3.2 Installing the CTS 3xxx, CTW 3xxx and CTLP 3xxx toilets

The CTW 3xxx model has an integrated water tank, while the CTS 3xxx model does not.

The control and operator panel is integrated in the housing with these models.

Both models can be installed directly against the room wall (see Fig. below). To fit the toilet and the console, a previously installed wall holder is used (see Section 4.3.2.1).

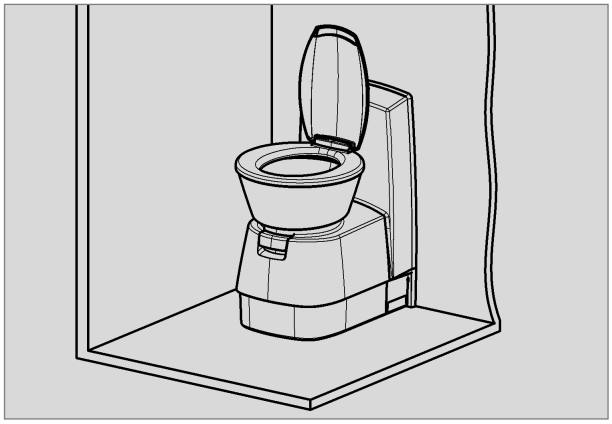

Fig. 14

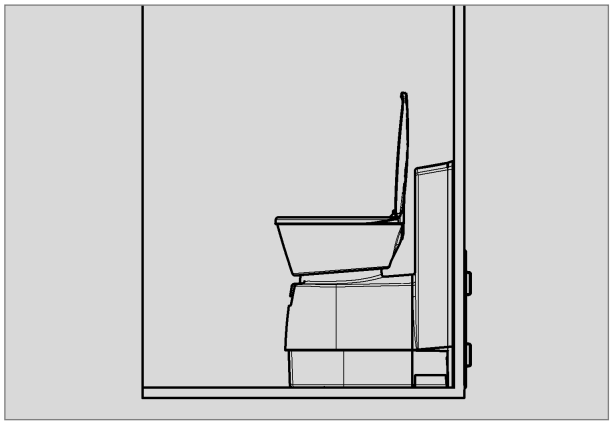

Fig. 15

4.3.2.1 Fitting the wall holder

Fit the wall holder (Fig. 16) in the designated position (see table, Fig 18).

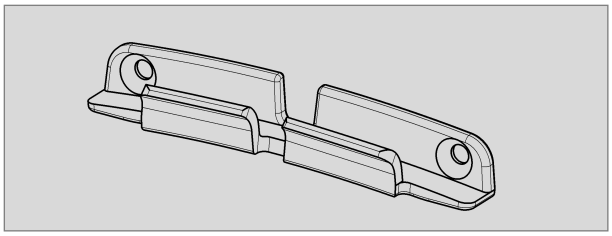

Fig. 16

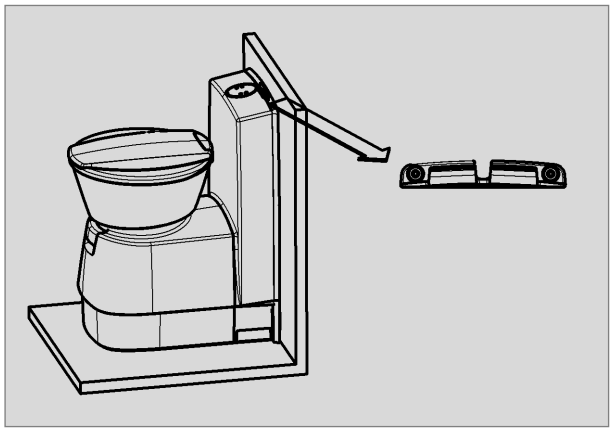

Fig. 17

Fitting height of the wall holder:

Model	a	b
CTS / CTW 3000	90 mm	651.5 mm

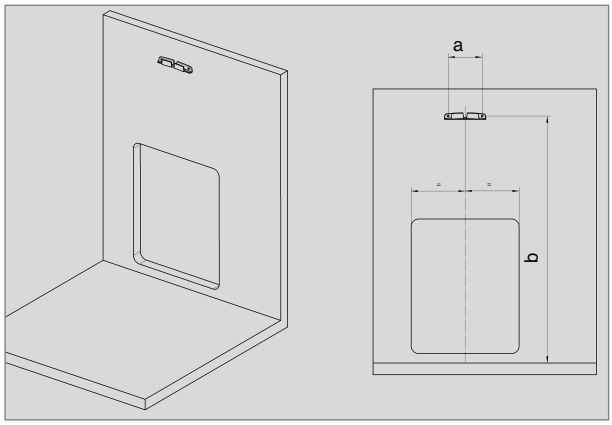

Fig. 18

4.3.2.2 Fitting the CTS 3xxx, CTW 3xxx and CTLP 3xxx toilets

Place the entire toilet module in the desired position in front of the wall holder. Lift the toilet. Then place the toilet so that the part on the side of the wall of the housing hooks into the the wall holder (Fig. 20).

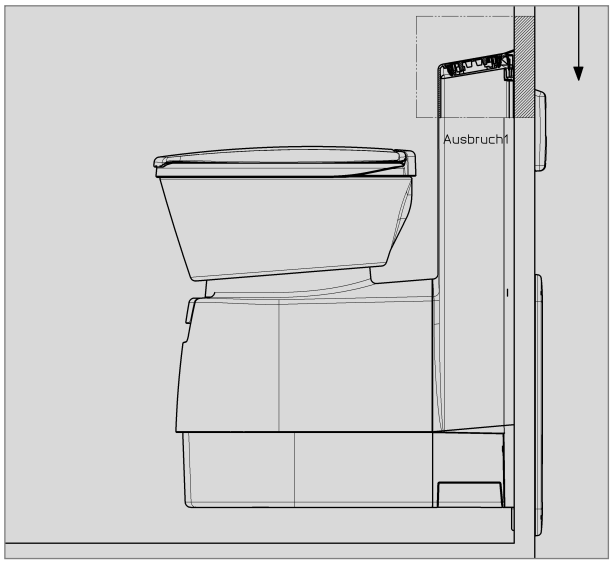

Fig. 19

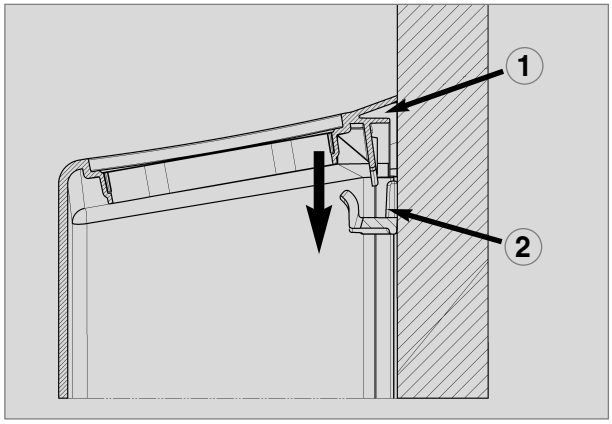

Fig. 20

1 = Wall connection console
2 = Wall holder

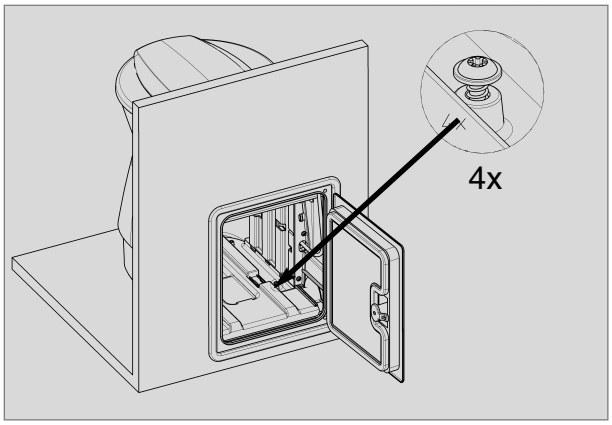

Fig. 21

If the toilet is installed in the desired position, bolt down the floor plate with the four screws and insert the mobile tank cassette.

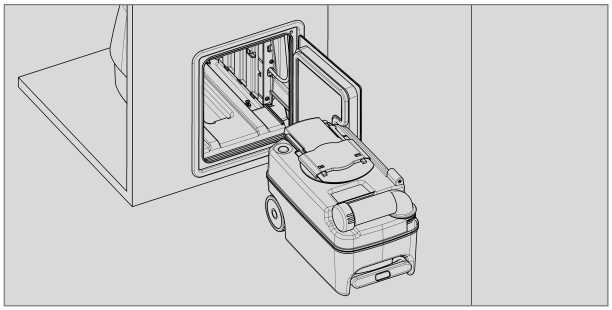

Fig. 22

4.4 Water connection

The water supply is connected via a module (Fig. 10) where the water feed hose is atta–ched. The fresh water tank is linked at con–nection "**1**". The toilet flush is provided via connection "**2**". Install the water connection module on the vehicle's wall in an accessible position (Fig. 24). Wall holder "**3**" serves to absorb a module and an optional water tank.

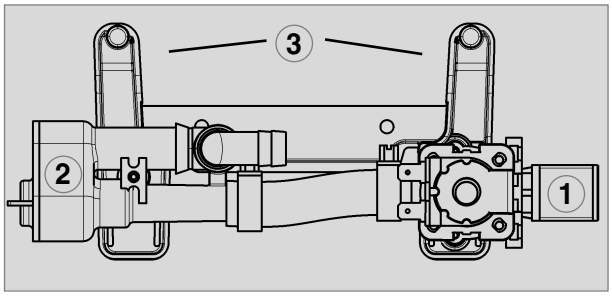

Fig. 23

Fit all hose connections with ring clamps and then check leak tightness.

4.4.1 Connecting the water supply for the CT 3xxx toilet

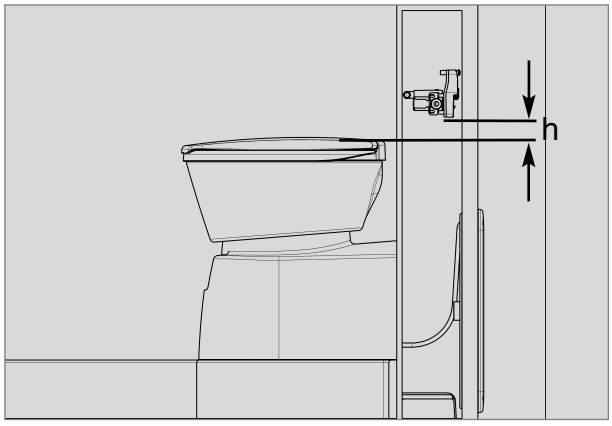

Fig. 24

Always install the water connection module above the toilet's highest water level (h = min. 50 mm).

CAUTION!

If the water connection module is installed below the water level, there is a risk of foul water flowing back into the tank.

4.4.2 Water connection for the CTS 3xxx, CTW 3xxx, CTLP 3xxx models

The water supply is connected in the same way as with the CT 3xxx model via a module (Fig. 22). The water connection module is already installed in the console. The CTW 3xxx model with the integrated water tank already contains the electric water pump and the filling nozzles for external fresh water supply.

4.5 Ventilation

Open the duct (a) for the ventilation hose in the top area of the door frame (press out spraying varnish on the outside, drill through on the inside).

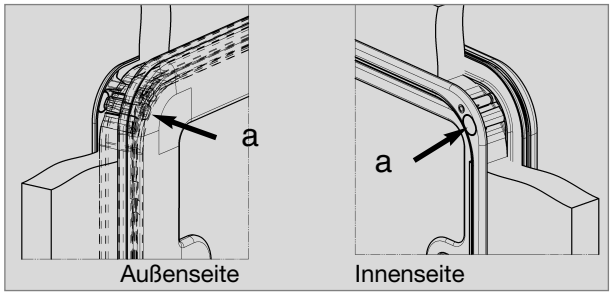

Fig. 25

Place the ventilation hose on the integrated ventilation aperture of the service door as illustrated.

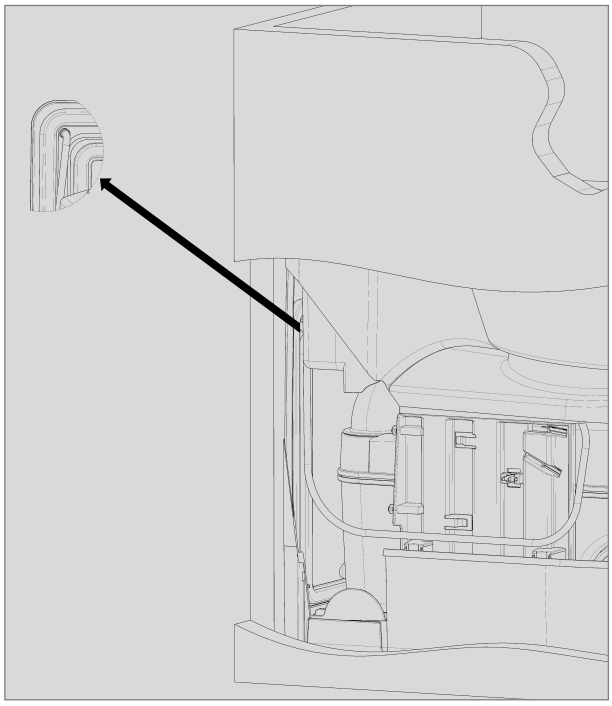

Fig. 26

4.6 Electric connection

CAUTION!

Electric connection must be carried out by trained staff.

4.6.1 System diagrams

4.6.1.1 System diagram (CTW 3xxx model with integrated water pump)

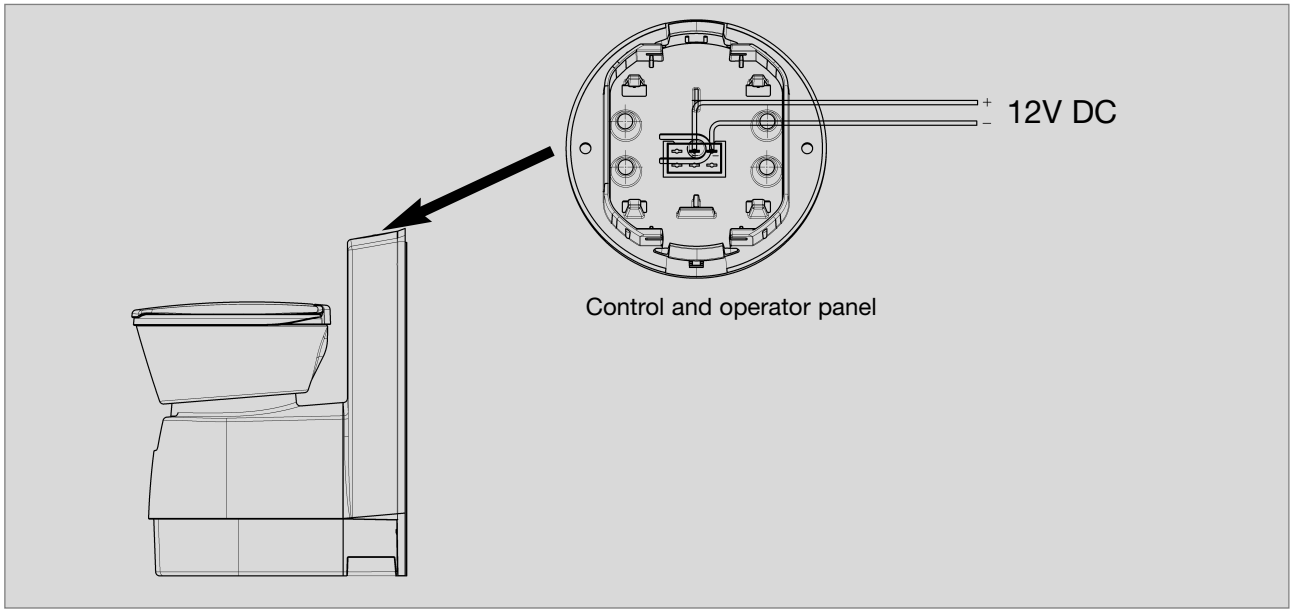

Fig. 27

Supply voltage: : 12 V DC

12V connection cable profile :
min. 0.75 mm²

Toilet control fuse : 7.5 A
(integrated automobile fuse)

Current consumption of the pump :
max. 2 A

4.6.1.2 System diagrams (CT/CTS/CTLP 3xxx models with external water pump)

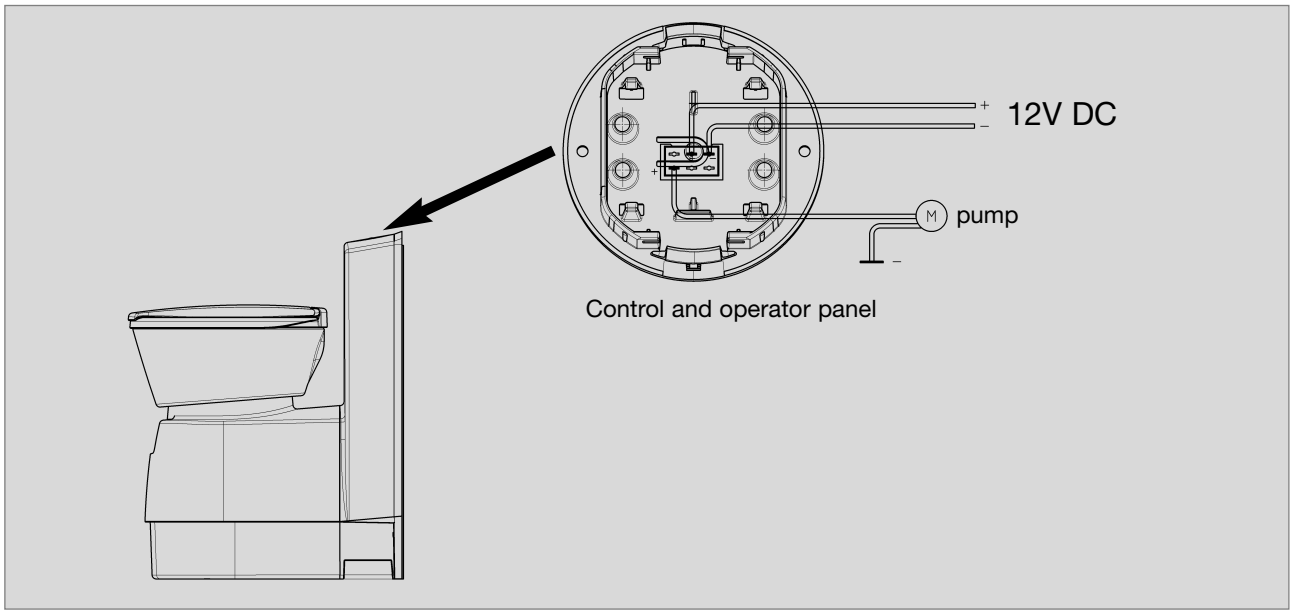

Fig. 28

Supply voltage: : 12 V DC

12V connection cable profile :
min. 1.5 mm²

Toilet control fuse : 7.5 A
(integrated automobile fuse)

Current consumption of the pump :
max. 5 A

CAUTION!

The external water pump must not exceed a nominal power of 60 W (12V/5A).

The external water pump is not included in the scope of delivery.

4.6.2 Circuit diagrams

4.6.2.1 Circuit diagram (models with internal water tank, model CTW 3xxx)

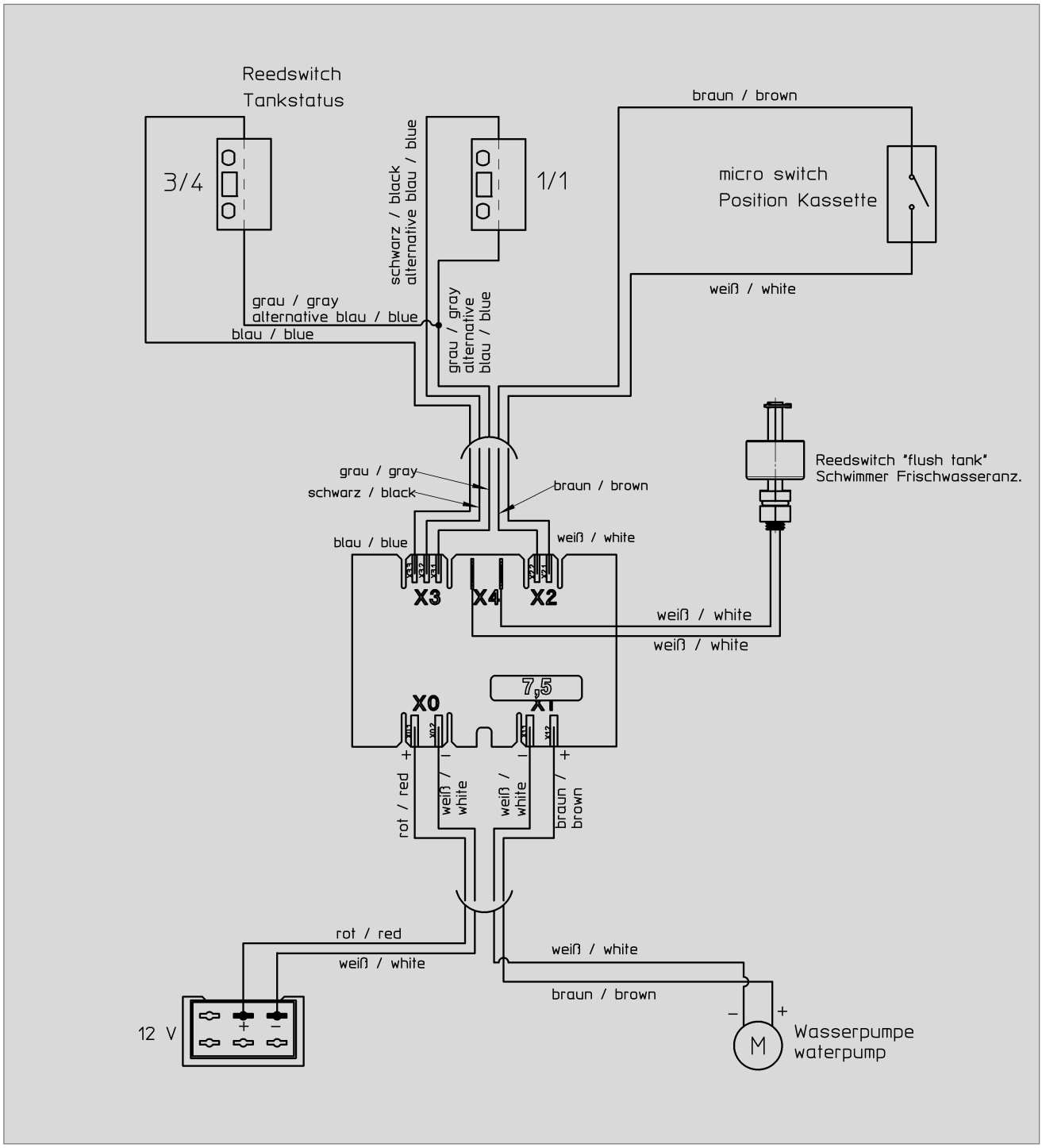

Fig. 29

4.6.2.2 Circuit diagram (models with external water tank

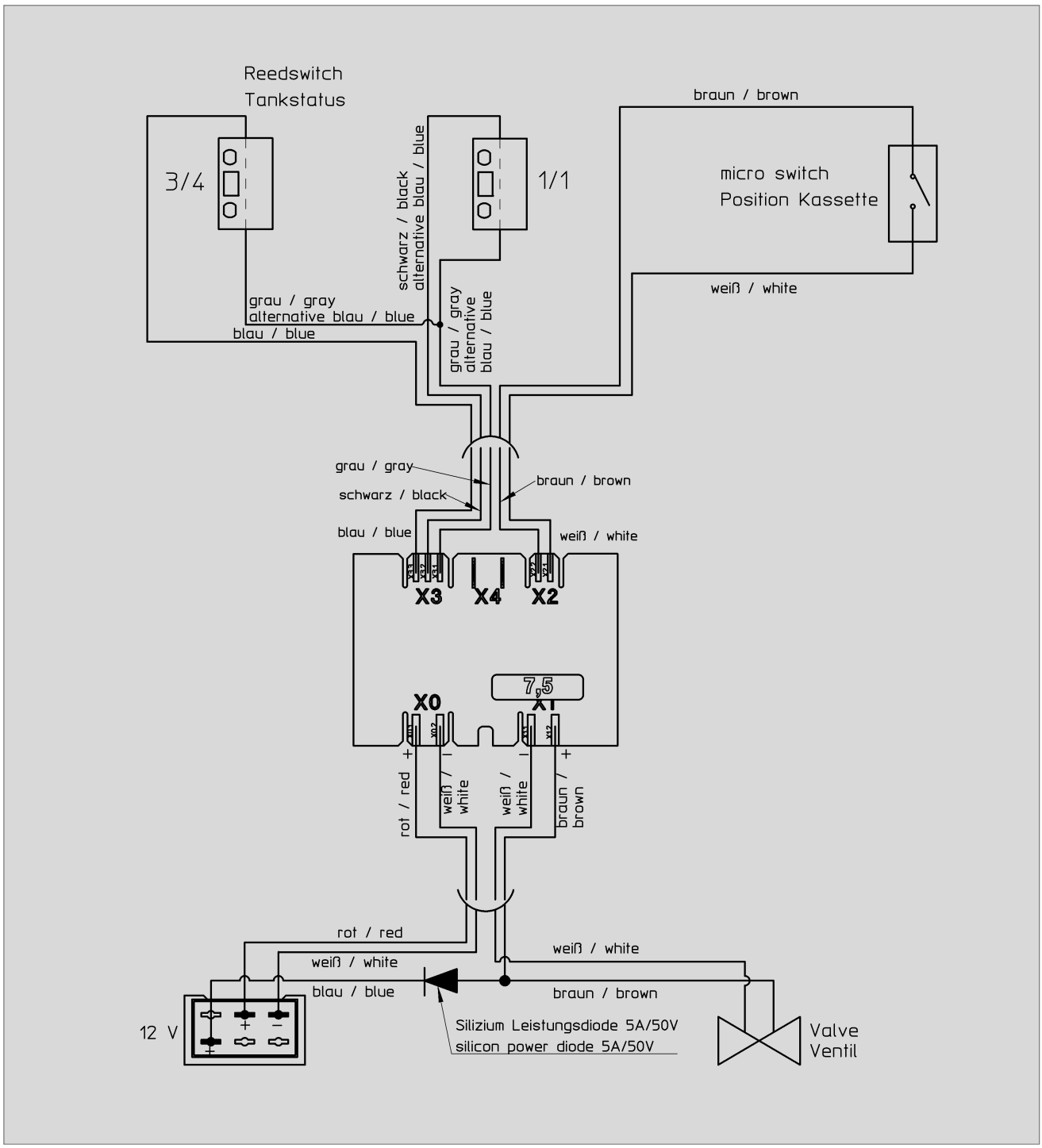

Fig. 30

4.7 Annex

4.7.1 Dimensioned sketches

4.7.1.1 CT 3xxx

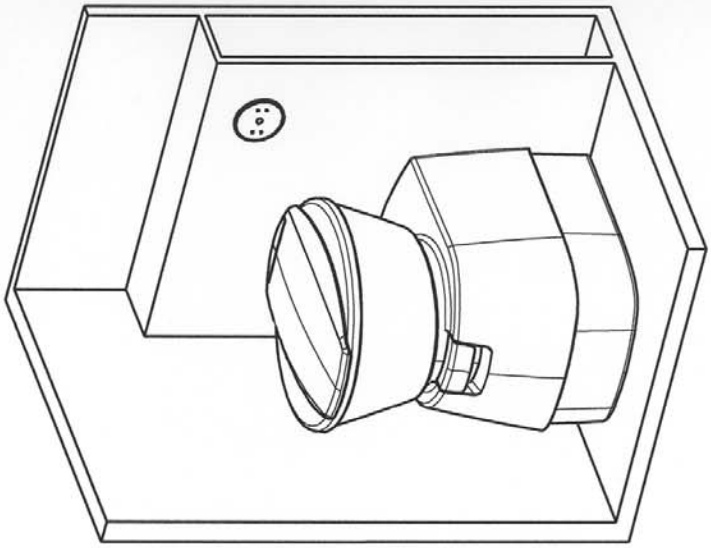

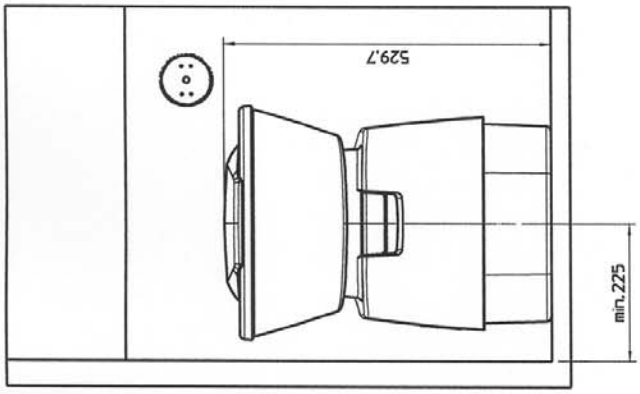

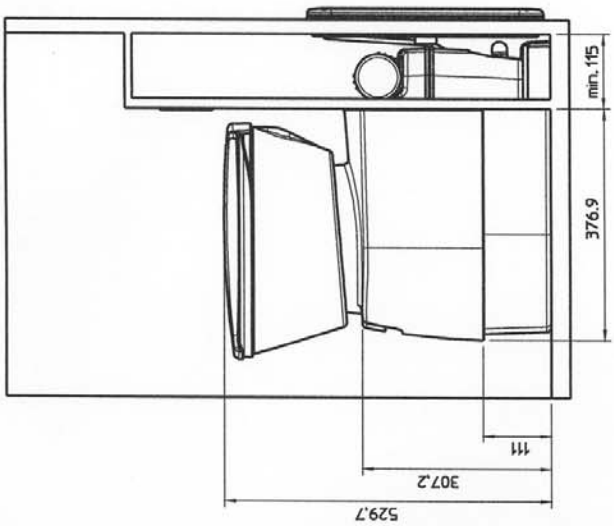

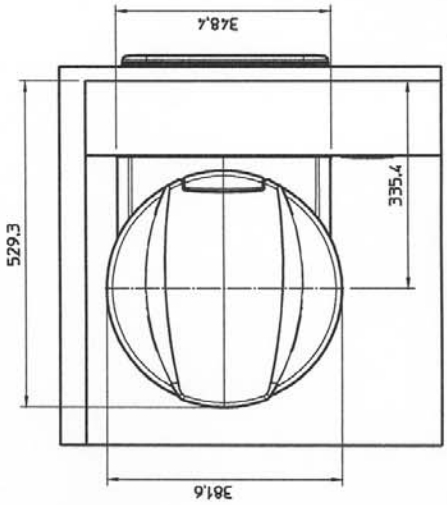

4.7.1.2 CTLP 3xxx

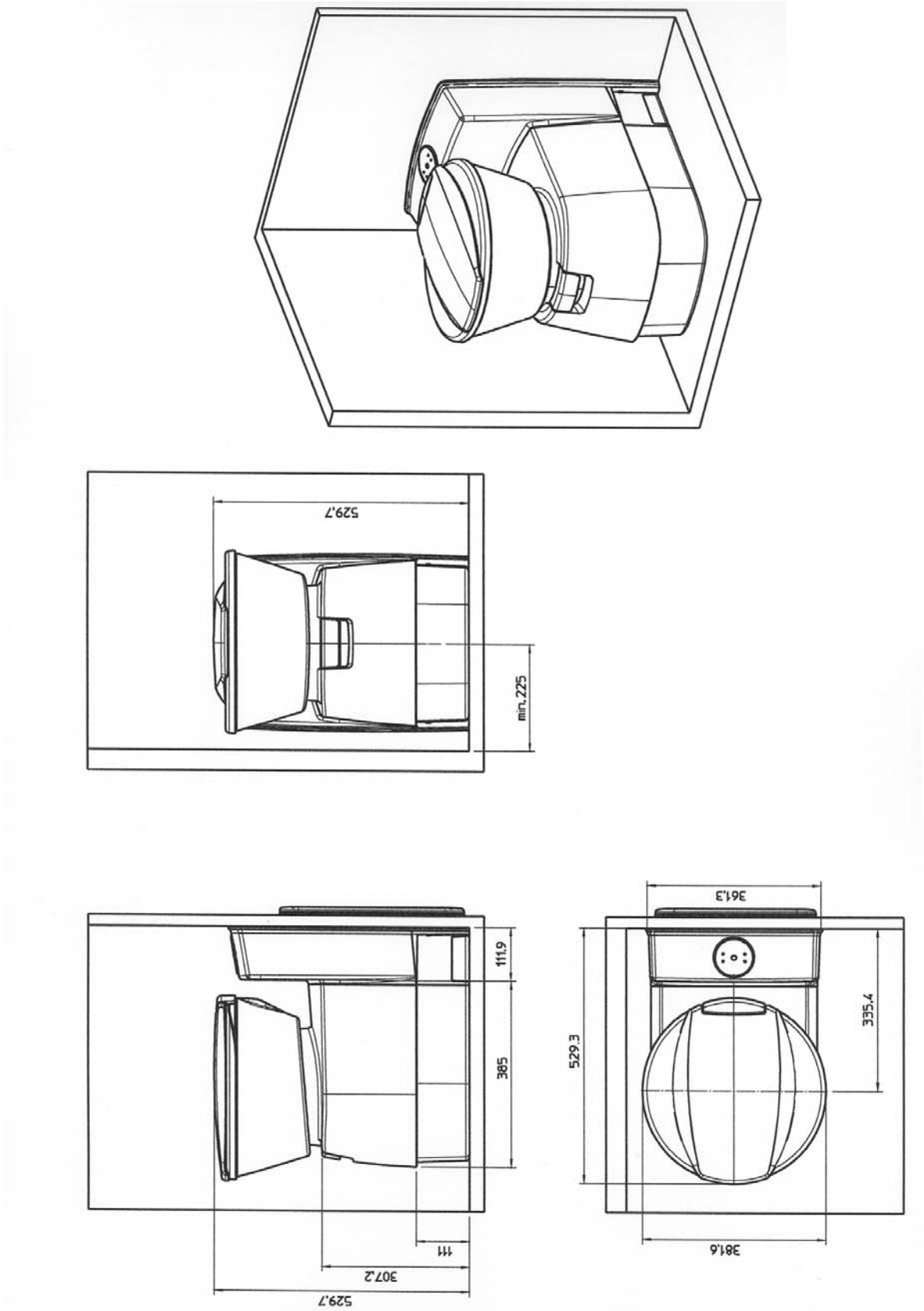

4.7.1.3 CTS / CTW 3xxx

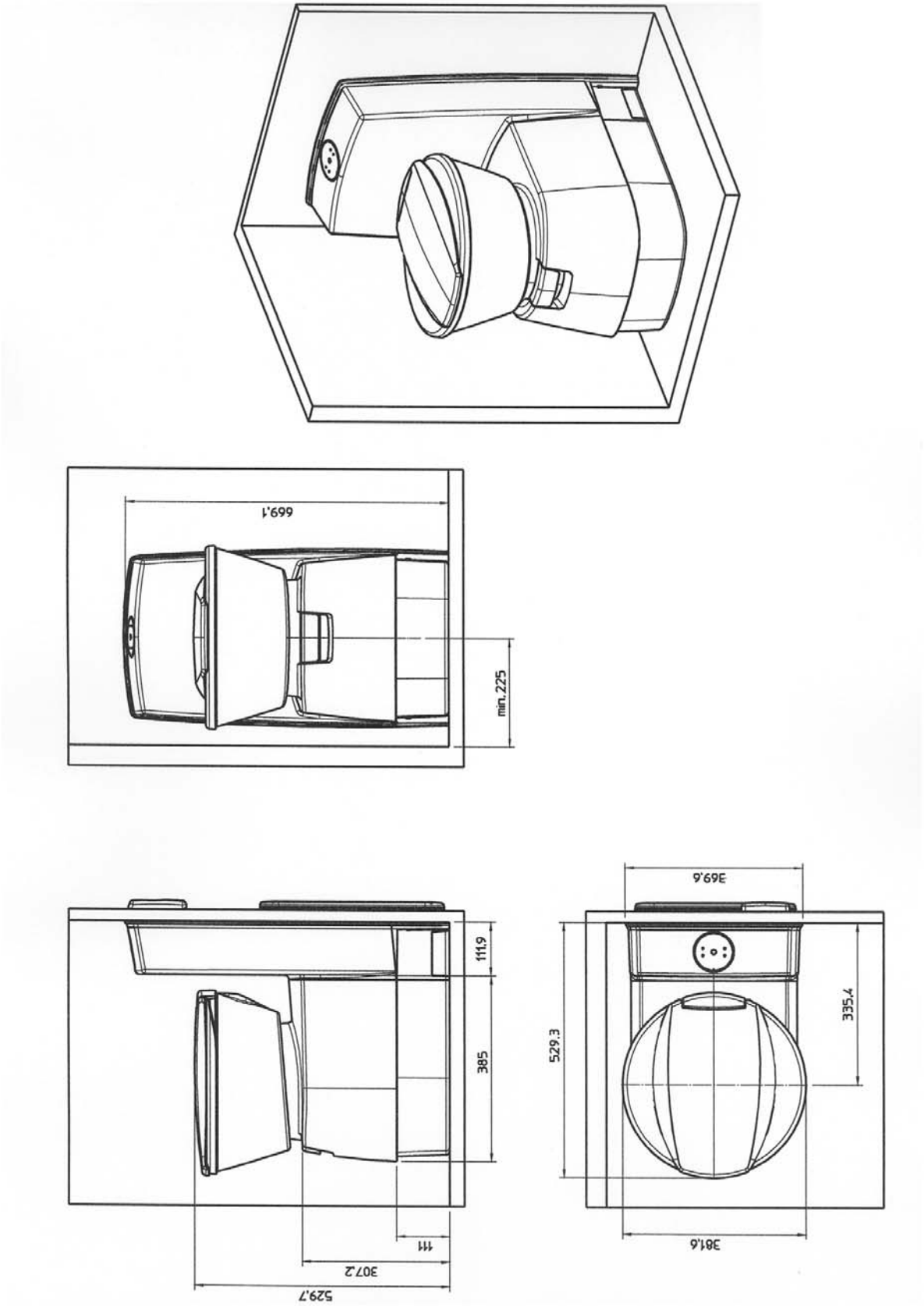

4.7.2 Templates
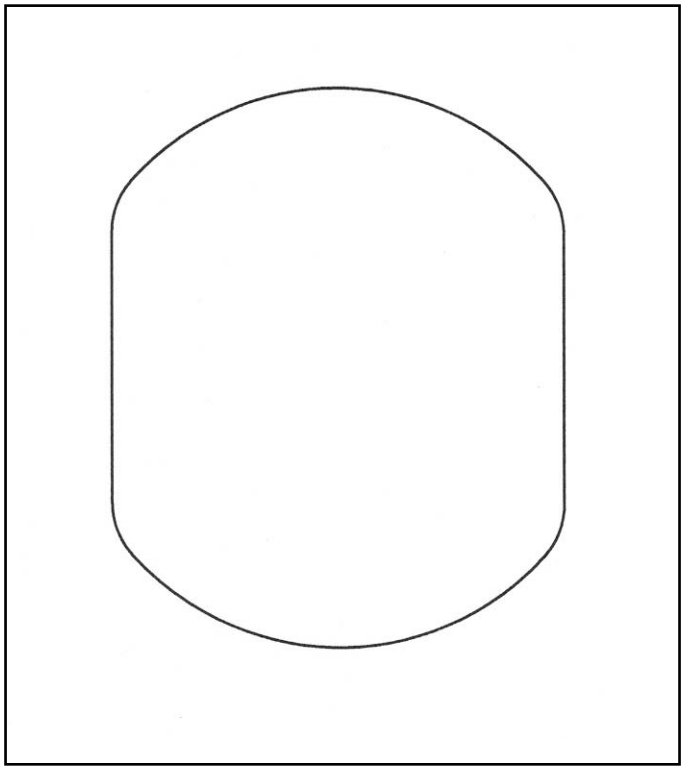
4.7.2.1 Template 1 for control and operator panel installation