INTRODUCTION

The 2013 edition of the Atwood Air Conditioner Service Manual is a resource created to help service technicians identify Atwood products by serial number, diagnose service problems, and efficiently and effectively process warranty claims. This manual offers a general overview of the product as well as more specific product information.

For the Air Conditioner product within this manual, you will find model identification, sequence of operation, part identification and troubleshooting guides, warranty procedures, flat rate schedules, and replacement part reference chart.

Additional information is available on our website. Visit www.askforatwood.com to download brochures, review trouble shooting guides, and read the latest information bulletins. All Atwood Authorized Service Centers are listed on our site as well, accessible via an easy-to-use search system.

Service for all Atwood products is handled out of our Elkhart, IN location. Should you have any questions, please contact service toll-free at 1-866-869-3118, or by e-mail at service@atwoodmobile.com. Please be sure to have the Model and Serial Numbers when you call.

Thank you for your business,

Atwood Service Team

Atwood AirCommand Air Conditioner
Service Manual

Table of Contents

Recommended Tools and Equipment……..……..……..pg 3

Model Number Identification……..……..……..pg 3

Air Conditioner Parts (Exploded Views of Ducted and Non-ducted units)...pg 4-7

Service Part Numbers…….pg 8

Air Conditioner Sequence of Operation…….pg 9 -10

Thermostat Operation (Lock, Interrogation, Control Parameters)..……...pg 11-14

Troubleshooting Guide (Error Code Test Procedures)…….……pg 15-16

Troubleshooting Guide (Typical Fault Conditions)……pg 17-19

Recharging Instructions, Generators and Inverters.…….....pg 20

Thermistor Temperature vs Resistance Table..…….....pg 21

Specification Listing..……..…….....pg 22

Schematic Diagram ……..….....pg 23 -24

Pictures…….…….pg 25-26

Recommended Tools

Common Hand Tools:

- 1/8" and 1/4" nutdrivers
- Open end wrenches
- Flat blade and Philips screwdrivers
- Packing knife

Digital Multimeter

Capable of measuring continuity and AC & DC voltages

Digital Thermocouple Thermometer

Capable of measuring temperature with 2 thermocouples

Megohmmeter (megger)

Capable of checking for ground leakage paths.

Model Number Description

AC – 1351 W

Color

W - White
B - Black

Generation

1 - First Generation

Power rating & Ducted/Non-Ducted

135 – 13.5K BTU; Non- Ducted AC (Air Conditioner)
136 – 13.5K BTU; Ducted AC (Air Conditioner)
150 – 15.0K BTU; Non-Ducted HP (Heat Pump)
151 – 15.0K BTU; Ducted HP (Heat Pump)

Appliance Type

AC – Air Conditioner

Model Number/ Part Number

Model No	Description	Atwood Part No Roof Unit Only
AC - 1351 W	Non-ducted	15025
AC - 1501 W	Non-ducted	15026
AC - 1351 B	Non-ducted	15030
AC - 1501 B	Non-ducted	15031
AC - 1361 W	Ducted	15027
AC - 1511 W	Ducted	15028
AC - 1361 B	Ducted	15032
AC - 1511 B	Ducted	15033

Exploded View of Air Conditioner Service Parts

AC 1361 - DUCTED COOLING

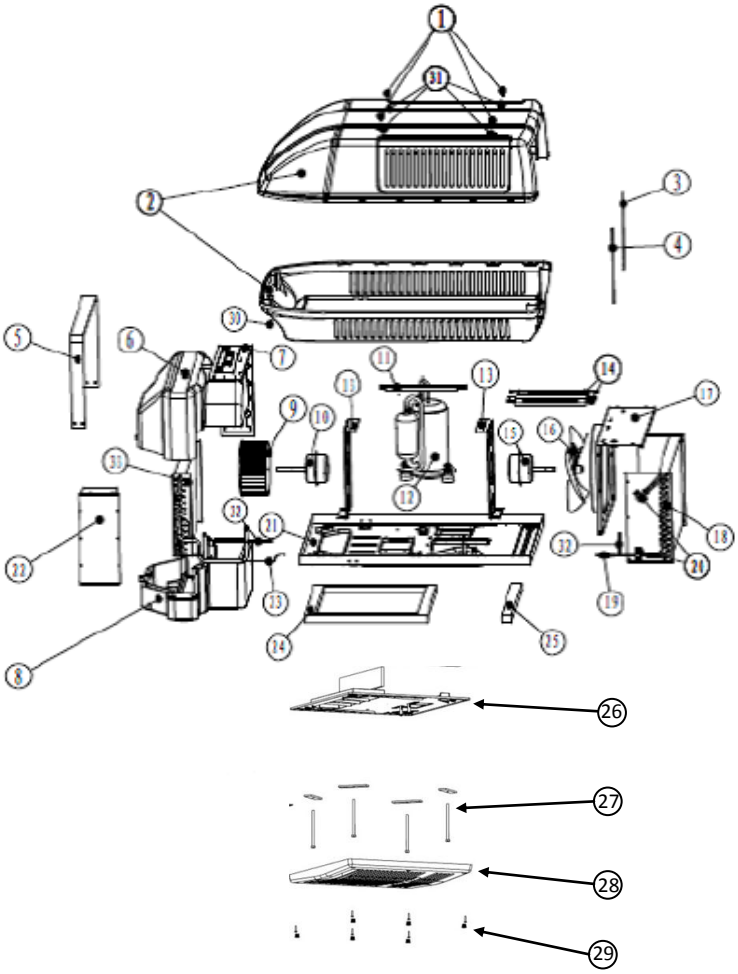

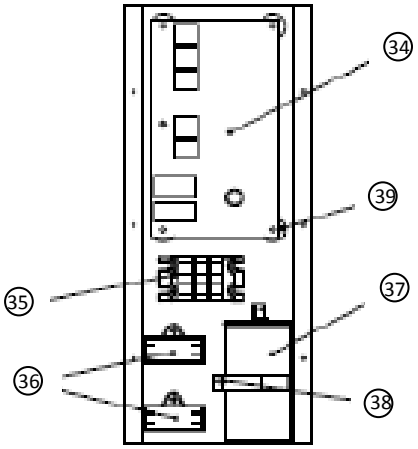

Fig #	Description	Qty
1	BOLT M6 x 25mm	4
2	SHROUD	1
3	CANOPY REINFORCING STRAP RH	1
4	CANOPY REINFORCING STRAP LH	1
5	EVAP HOUSING STRAP	1
6	EVAP HOUSING UPPER	1
7	EVAP MOTOR STABILIZING BRACKET	1
8	EVAP HOUSING LOWER	1
9	EVAP FAN	1
10	EVAP MOTOR	1
11	COMPRESSOR STABILIZING BRACKET	1
12	COMPRESSOR, LG(A), RECHI (B)	1
13	MOTOR MOUNT BRACKET	2
14	FAN MOUNTING SUPPORT	2
15	CONDENSOR FAN MOTOR	1
16	CONDENSOR FAN	1
17	CONDENSOR SHROUD	1
18	CONDENSOR COIL	1
19	CHARGING TUBE	1
20	LIQUID LINE	2
21	AC CHASSIS	1
22	CONTROL BOX	1
23	CAPILLIARY ASSEMBLY	1
24	ROOF SEALING GASKET, HOLE	1
25	ROOF SEALING GASKET, REAR	1
26	PLENUM DECK ASSEMBLY	1
27	HOLD DOWN BARS & BOLTS (incl. DECK ASSY)	1
28	PLENUM FASCIA	1
29	SCREWS AND COVER PLUGS (incl. FASCIA)	1
30	CANOPY SCREWS st4 x 16mm	2
31	WASHERS inner dia. 6mm	4
32	FILTER/DRIER	2
33	EVAP COIL	1
34	CONTROL BOARD	1
35	TERMINAL CONNECTOR	1
36	MOTOR CAPACITOR 10 UF	2
37	COMPRESSOR CAPACITOR 50 UF	1
38	CAPACITOR STRAP	1
39	STANDOFFS	4

Exploded View of Air Conditioner Service Parts

AC 1511 - DUCTED HEAT PUMP

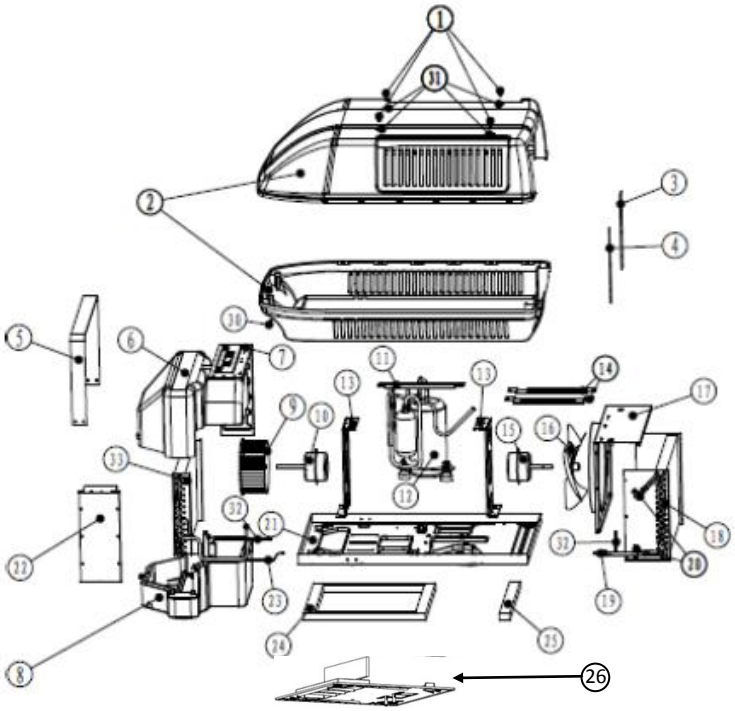

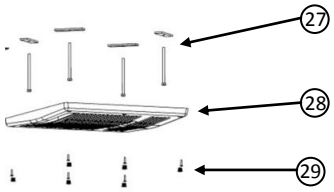

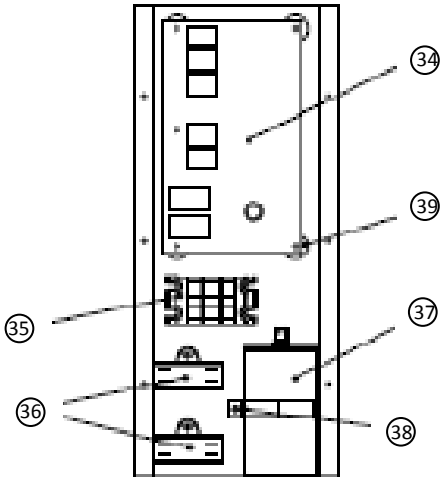

Fig #	Description	Qty
1	BOLT M6 x 25mm	4
2	SHROUD	1
3	CANOPY REINFORCING STRAP RH	1
4	CANOPY REINFORCING STRAP LH	1
5	EVAP HOUSING STRAP	1
6	EVAP HOUSING UPPER	1
7	EVAP MOTOR STABILIZING BRACKET	1
8	EVAP HOUSING LOWER	1
9	EVAP FAN	1
10	EVAP MOTOR	1
11	COMPRESSOR STABILIZING BRACKET	1
12	COMPRESSOR, LG	1
13	MOTOR MOUNT BRACKET	2
14	FAN MOUNTING SUPPORT	2
15	CONDENSOR FAN MOTOR	1
16	CONDENSOR FAN	1
17	CONDENSOR SHROUD	1
18	CONDENSOR COIL	1
19	CHARGING TUBE	1
20	LIQUID LINE	2
21	AC CHASSIS	1
22	CONTROL BOX	1
23	CAPILLIARY ASSEMBLY	1
24	ROOF SEALING GASKET, HOLE	1
25	ROOF SEALING GASKET, REAR	1
26	PLENUM DECK ASSEMBLY	1
27	HOLD DOWN BARS & BOLTS (incl. DECK ASSY)	1
28	PLENUM FASCIA	1
29	SCREWS AND COVER PLUGS (incl. FASCIA)	1
30	CANOPY SCREWS st4 x 16mm	2
31	WASHERS inner dia. 6mm	4
32	FILTER/DRIER	2
33	EVAP COIL	1
34	CONTROL BOARD	1
35	TERMINAL CONNECTOR	1
36	MOTOR CAPACITOR 10 UF	2
37	COMPRESSOR CAPACITOR 50 UF	1
38	CAPACITOR STRAP	1
39	STANDOFFS	4

Exploded View of Air Conditioner Service Parts

AC 1351 - NON-DUCTED COOLING

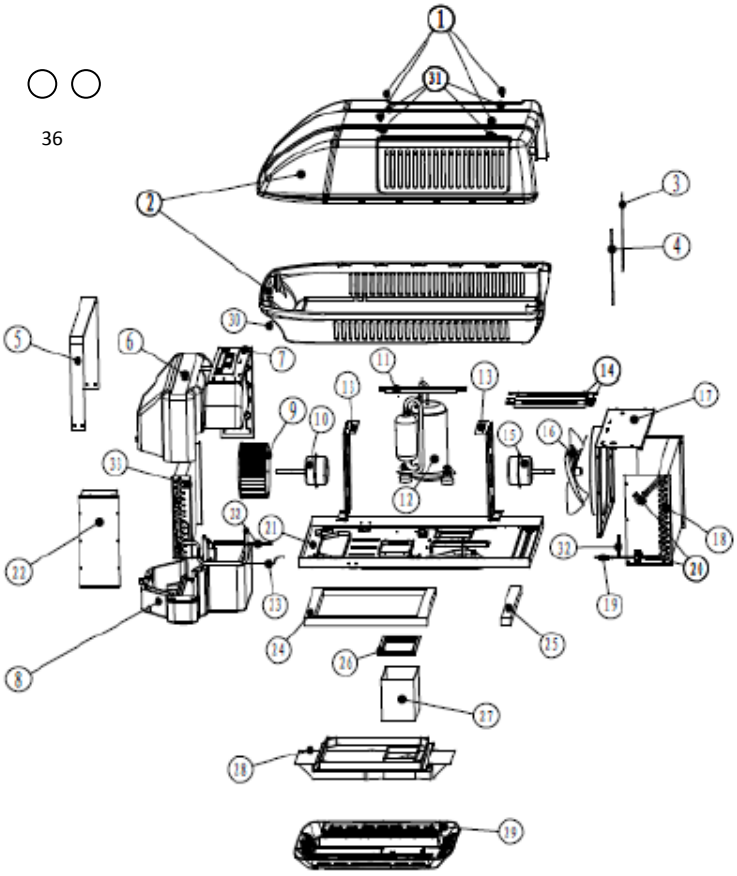

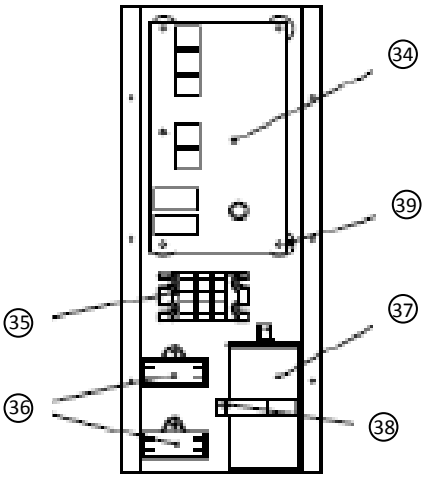

#	Description	Qty
1	BOLT m6 x 25mm	4
2	SHROUD	1
3	CANOPY REINFORCING STRAP RH	1
4	CANOPY REINFORCING STRAP LH	1
5	EVAP HOUSING STRAP	1
6	EVAP HOUSING UPPER	1
7	EVAP MOTOR STABALIZING BRACKET	1
8	EVAP HOUSING LOWER	1
9	EVAP FAN	1
10	EVAP MOTOR	1
11	COMPRESSOR STABALIZING BRACKET	1
12	COMPRESSOR LG (A), RECHI (B)	1
13	MOTOR MOUNT BRACKET	2
14	FAN MOUNTING SUPPORT	2
15	CONDENSOR FAN MOTOR	1
16	CONDENSOR FAN	1
17	CONDENSOR SHROUD	1
18	CONDENSOR COIL	1
19	CHARGING TUBE	1
20	LIQUID LINE	1
21	AC CHASSIS	1
22	CONTROL BOX	1
23	CAPILLARY ASSY.	1
24	ROOF SEALING GASKET, HOLE	1
25	ROOF SEALING GASKET, REAR	1
26	DUCT ADAPTER	1
27	DUCT	1
28	CEILING PLATE	1
29	PLENUM	1
30	CANOPY SCREWS st4 x 16mm	2
31	WASHERS inner dia. 6mm	4
32	FILTER/DRIER	2
33	EVAP COIL	1
34	CONTROL BOARD	1
35	TERMINAL CONNECTOR	1
36	MOTOR CAPACITORS 10UF	2
37	COMPRESSOR CAPACITOR 50UF	1
38	CAPACITOR STRAP	1
39	STANDOFFS	4

Exploded View of Air Conditioner Service Parts

AC 1501 - NON-DUCTED HEAT PUMP

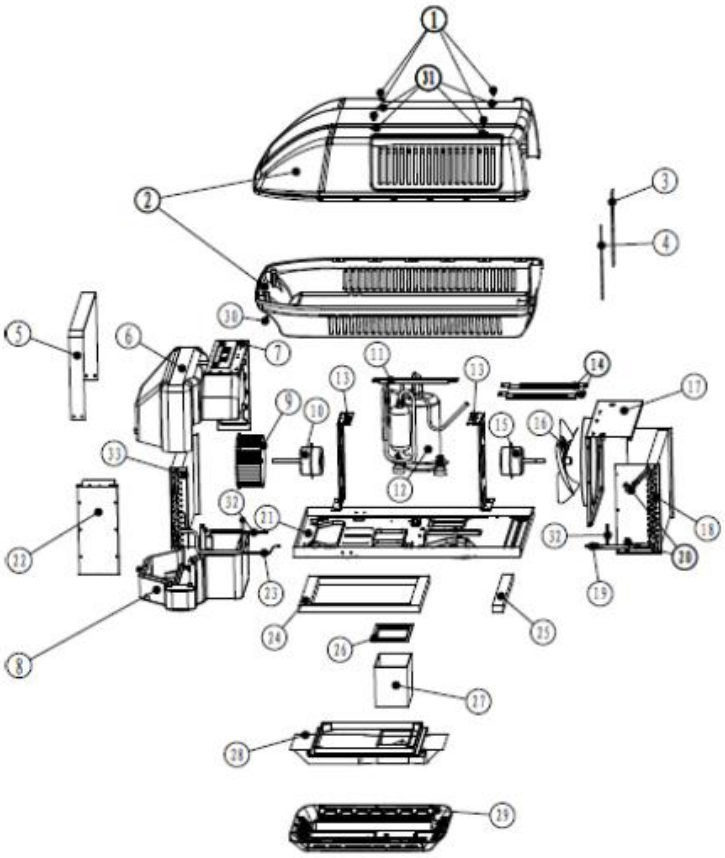

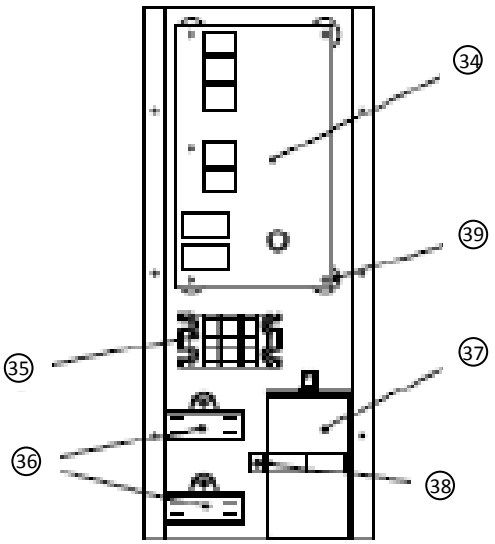

#	Description	Qty
1	BOLT m6 x 25mm	4
2	SHROUD	1
3	CANOPY REINFORCING STRAP RH	1
4	CANOPY REINFORCING STRAP LH	1
5	EVAP HOUSING STRAP	1
6	EVAP HOUSING UPPER	1
7	EVAP MOTOR STABALIZING BRACKET	1
8	EVAP HOUSING LOWER	1
9	EVAP FAN	1
10	EVAP MOTOR	1
11	COMPRESSOR STABALIZING BRACKET	1
12	COMPRESSOR, LG	1
13	MOTOR MOUNT BRACKET	2
14	FAN MOUNTING SUPPORT	2
15	CONDENSOR FAN MOTOR	1
16	CONDENSOR FAN	1
17	CONDENSOR SHROUD	1
18	CONDENSOR COIL	1
19	CHARGING TUBE	1
20	LIQUID LINE	2
21	AC CHASSIS	1
22	CONTROL BOX	1
23	CAPILLARY ASSY.	1
24	ROOF SEALING GASKET, HOLE	1
25	ROOF SEALING GASKET, REAR	1
26	DUCT ADAPTER	1
27	DUCT	1
28	CEILING PLATE	1
29	PLENUM	1
30	CANOPY SCREWS st4 x 16mm	2
31	WASHERS inner dia. 6mm	4
32	FILTER/DRIER	2
33	EVAP COIL	1
34	CONTROL BOARD	1
35	TERMINAL CONNECTOR	1
36	MOTOR CAPACITORS 10UF	2
37	COMPRESSOR CAPACITOR 50UF	1
38	CAPACITOR STRAP	1
39	STANDOFFS	4

SERVICE PARTS

Atwood PN	Description	Picture ID
15000	Literature, IOM Non-ducted	Not shown
15015	AC Plenum Kit, Non-ducted, Off White	Not shown
15016	AC Plenum Kit, Ducted, Off White	Not shown
15021	AC Plenum Kit, Non-ducted, White	Not shown
15022	AC Plenum Kit, Ducted, White	Not shown
15023	AC Remote Control – Non-ducted (no Furnace button)	Not shown
15024	AC 120V Field Connector	Not shown
15025	AC-1351W – Non-ducted, White Roof Unit Only	Not shown
15026	AC-1501W – Non-ducted, White Roof Unit Only	Not shown
15027	AC-1361W – Ducted, White Roof Unit Only	Not shown
15028	AC-1511W – Ducted, White Roof Unit Only	Not shown
15029	AC Wall Thermostat, White – Ducted (with Furnace button)	Not shown
15030	AC-1351B - Non-ducted, Black Roof Unit Only	Not shown
15031	AC-1501B – Non-ducted, Black Roof Unit Only	Not shown
15032	AC-1361B - Ducted, Black Roof Unit Only	Not shown
15033	AC-1511B –Ducted, Black Roof Unit Only	Not shown
15034	AC Wall Thermostat, Black - Ducted (with Furnace button)	Not shown
15050	AC Top Shroud, White	2
15051	AC Top Shroud, Black	2
15054	AC Condenser Fan Motor	15
15055	AC Evaporator Fan Motor	10
15056	AC Condenser Fan	16
15057	AC Evaporator Fan	9
15060	AC Compressor, LG, 15K Only	12
15061	AC Compressor, Rechi, 13.5K Only	12
15062	AC Run Capacitor, Rechi, 13.5K Only	37
15064	AC Run Capacitor, LG, 15K Only	37
15066	AC Inside Filters	32
15070	AC Installation Kit, Hold Down Clamp	Not shown
15071	AC Remote Control – Ducted (with Furnace button)	Not shown
15072	Extender cable, 13ft length (for some ducted units only)	Not shown
15073	Communication cable, 20ft length (for ducted units only)	Not shown
15077	AC Electrical Kit, Non-ducted units	Not shown
15078	Literature, IOM Ducted	Not shown
15079	Control Board, Non-ducted, AC-1351	34
15080	Control Board, Non-ducted, AC-1501	34
15081	Control Board, Ducted, AC-1361 and AC-1511	34

Air Conditioner Sequence of Operation

VERIFYING NORMAL OPERATION

1. Turn the power on at the circuit breaker and verify 110VAC between neutral (N) and Line (L).

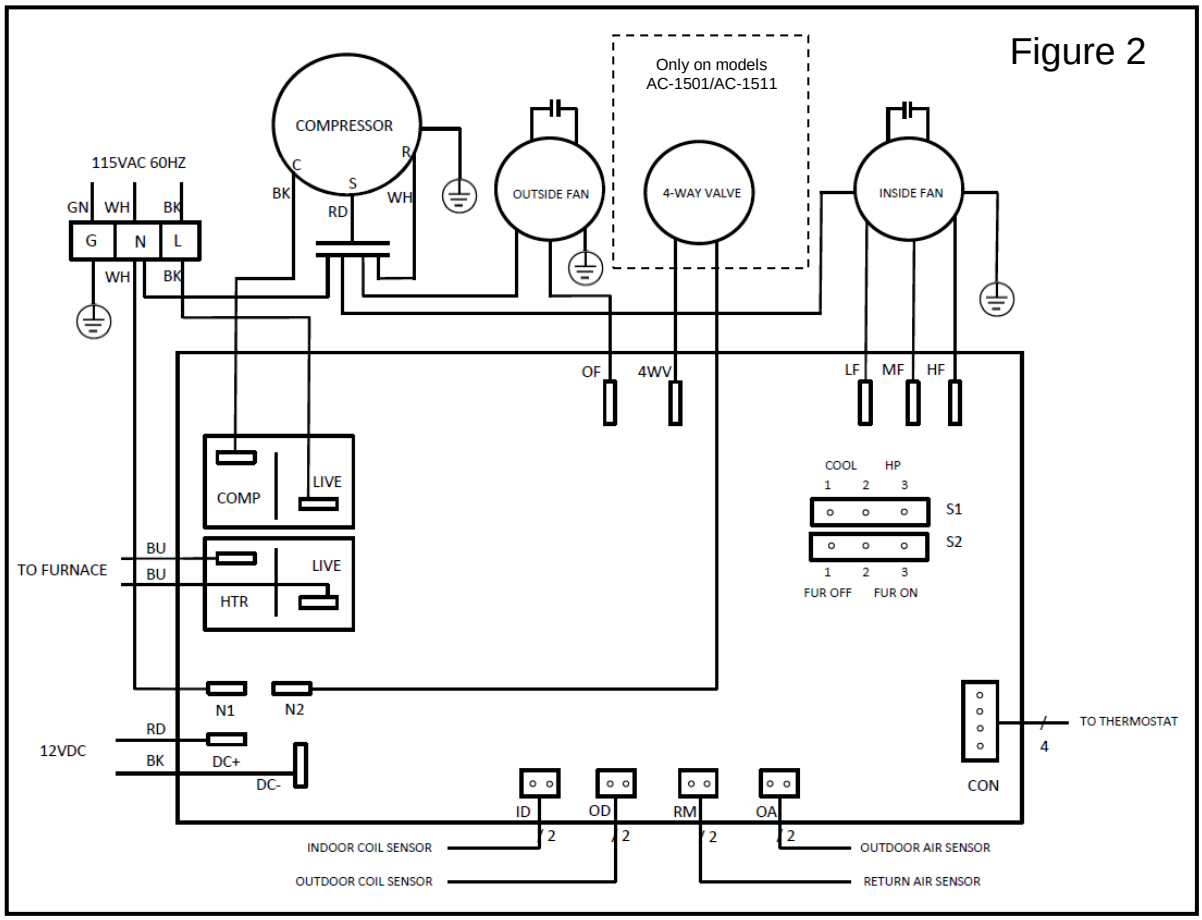

Refer to the schematic in Figure 2 for steps 2-6.

2. Press the ON/OFF button and press the MODE button to select FAN
3. Cycle through the LO, MED and HIGH fan speeds checking that all speeds run.
   On HIGH speed – verify that 110VAC is output to the HF terminal with respect to neutral (N).
   On MED speed – verify that 110VAC is output to the MF terminal with respect to neutral (N).
   On LOW speed – verify that 110VACis output to the LF terminal with respect to neutral (N).
4. Set mode to COOL, and adjust temperature setting via up/down buttons to approx 6°F (3°C) **less** than the displayed temperature (ie. room temp). The compressor will start within three minutes.
   Verify 110VAC on the COMP terminal on the control board. If there is no power on COMP terminal – then check the LIVE terminal on the board as shown in Fig 2. If 110VAC is present then the board may be defective; if not present check AC supply to unit.
5. For heat pump models AC-1501/AC-1511, set mode to HEAT, and adjust the temperature setting to approx. 6°F (3°C) above displayed (room) temperature. The compressor will start within three minutes.
   Verify 110VAC on the COMP terminal on the control board with respect to neutral (N).
   Verify 110VAC on the 4WV terminal (to change the refrigerant flow in heat pump mode).
   Verify 110VAC on one of the fan terminals (based on the fan setting); warm air should be present.
6. For air conditioner models AC-1351/AC-1361, set mode to HEAT, set temp setting to 6°F (3°C) above the displayed (room) temperature. The furnace will start within three minutes.
   Verify +12VDC on the HTR LIVE terminal (from the furnace) and, when energized, +12VDC should also be on the HTR terminal (going to the furnace) on the control board in Fig 2.

Air Conditioner Sequence of Operation (cont.)

7. A functioning air conditioner should be able to create a temperature difference between the incoming air and the outgoing air. Specifically, in an air conditioner the outgoing air should be 20ºF-30ºF (11ºC-17ºC) cooler than the incoming air and in a heat pump the outgoing air should be 20ºF-30ºF (11ºC-17ºC) warmer than the incoming air.

Note: Regardless of the mode selected there will always be at least a 3 minute delay before the compressor starts.

VERIFYING THERMISTER OPERATION

There are 3 thermistor sensors in an air conditioner and a 4th thermistor sensor in heat pump only applications.

1) Indoor coil sensor - labeled ID on the control board and color coded YELLOW
2) Outdoor coil sensor – labeled OD on the control board and color coded RED
3) Return air sensor – labeled RM on the control board and color coded WHITE
4) Outdoor air sensor – labeled OA on the control board and color coded BLACK (available only on AC-1501/1511)

Each thermistor can be verified by measuring its resistance (out of circuit) and comparing the resistance value to the corresponding temperature value listed in the Table 1 near the back of this manual. A detailed troubleshooting method for measuring each thermistor's resistance is described in detail in the "Error Codes & Troubleshooting" section.

In addition, the temperature of each thermistor can be read on the thermostat control assembly by placing the control in the INTERROGATION mode and using TABLE 2 to read each thermistor directly. This is described in detail under the THERMOSTAT OPERATION section and again under E4 of the ERROR CODES & TROUBLESHOOTING section.

VERIFYING CONTROL BOARD CONFIGURATION

There are 2 jumper locations labeled S1 and S2 on the control board (refer to Fig 2 above). These jumpers allow the control board to be configured for the application. By jumpering pins 1 and 2 on S1, the board is configured as "cooling only". By jumpering pins 2 and 3 on S1, the board is configured as a "heat pump". By jumpering pins 1 and 2 on S2, the board is configured with the furnace function off. By jumpering pins 2 and 3, the board is configured with the furnace on.

Thermostat Operation

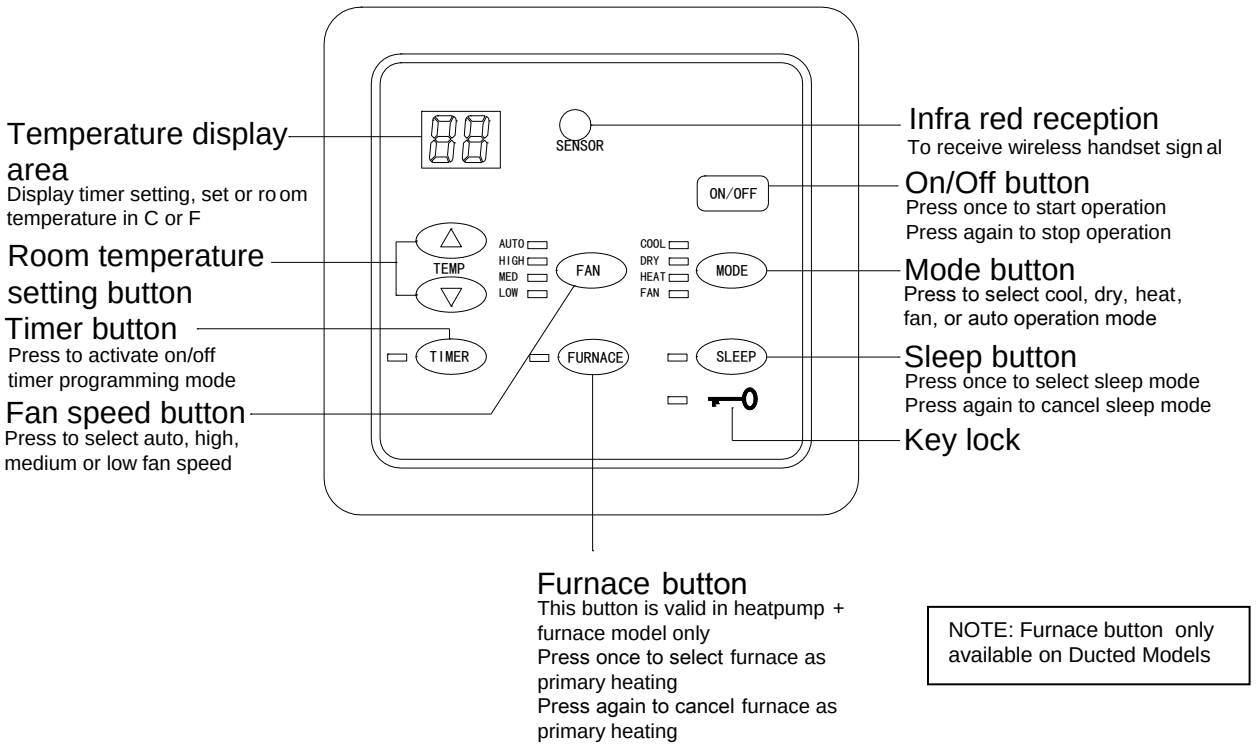

NOTE: Furnace button only available on Ducted Models

TEMPERATURE DISPLAY

- The 2 –digit LED display normally displays the Set Temperature EXCEPT when the SLEEP button is pressed or the control is LOCKED and in the interrogation mode.

- To display the room temperature, press SLEEP button for 5sec or longer. While this button is depressed, the room temperature is displayed until the key is released. Given the lack of display characters - if the control is displaying temperature in Fahrenheit, temperatures of 100-109°F will be displayed as A0 –A9, temperatures between 110-119°F will be displayed as B0-B9, temperatures between 120-129°F will be displayed as C0-C9, temperatures between 130-139°F will be displayed as D0-D9, temperatures between 140-149°F will be displayed as E0-E9, and temperatures between 150-159°F will be displayed as F0-F9. Temperatures are displayed normally in degrees Centigrade.

- To change from Centigrade to Fahrenheit display, press the ▽ and FAN buttons together for 5 seconds. Press the ▽ and FAN buttons together again for 5 seconds to change back from Fahrenheit to Centigrade.

LOCK MODE

- The LOCK mode is provided to prevent unauthorized access to the system settings
- To enter LOCK mode with the control system on, hold down ▽ and MODE buttons for 3 seconds to activate the key lock function, key lock symbol will light up. Repeat the same sequence to cancel key lock function

INTERROGATION MODE

- To enter the INTERROGATION mode, the control must be in LOCK mode. See above.
- The INTERROGATION mode allows a person to access the temperature measurements of various sensors throughout the system as well as directly control the air conditioner.
  - Pressing the ON/OFF pushbutton will start or stop the air conditioner.
  - To access the sensors, hold down ▽ and SLEEP buttons for 1 second to activate sensor temperature display function. The control flashes an LED to identify which sensor's temperature is being displayed as given in table 2 below. Press △ or ▽ button to select the desired sensor temperature. The displayed temperatures range from 19ºF to 172ºF (–9ºC to 78ºC).
  - To exit this mode, hold down the ▽ and SLEEP buttons for 1 second to de-activate sensor temperature display function.

TABLE 2 – INTERROGATION MODE TABLE

No	Menu	LED Indication	Remarks
1	Indoor coil temp	Auto fan flashing	
2	Outdoor coil temp	High fan flashing	
3	Outdoor air temp	Medium fan flashing	
4	Main board room temp	Low fan flashing	
5	Wall pad room temp	Auto and high fan flashing	
6	AC voltage supply	Auto and medium fan flashing	Voltage available shows "AC" else "- -"
7	Fan control in furnace primary heating	Auto and low fan flashing	Fan on shows "F0" else "FF"

CONTROL SYSTEM PARAMETERS

- This mode allows a person to view and CHANGE the control system parameters. Care must be taken not to change these values unless under strict supervision by a trained Atwood service technician.
- To display the control system parameters, hold down ▽ and FAN buttons for 1 second to activate the system control parameter programming. To select a different parameter to be displayed as listed in TABLE 3 below, press MODE button.
- To CHANGE a parameter setting press and hold the ▽ or △ buttons.
- To exit this mode, hold down ▽ and FAN buttons for 1 second to de-activate the system control parameter programming.

TABLE 3 – CONTROL SYSTEM PARAMETERS

No	Menu	LED Indication	Range	Remarks
1	Defrost termination temp	Auto fan flashing, Sleep off	50ºF - 59ºF,default 50ºF (10ºC - 15ºC, default 10ºC)	
2	Heat pump inhibit temp, Thp	High fan flashing, Sleep off	32ºF - 50ºF,default 44ºF (0ºC - 10ºC, default 7ºC)	Outdoor air temp to inhibit heat pump operation
3	Defrost differential, Td	Medium fan flashing, Sleep off	41ºF - 68ºF,default 46ºF (5ºC - 20ºC, default 8ºC)	
4	Defrost interval TM1	Low fan flashing, Sleep off	68ºF-302ºF,default 131ºF min (20ºC-150ºC, default 55ºC min)	Value > 99 is shown in hexadecimal format
5	Defrost interval TM2	Auto and high fan flashing	68ºF-302ºF,default 104ºF min (20ºC-150ºC, default 40ºC min)	Value > 99 is shown in hexadecimal format
6	Defrost mode, Dm	Auto and medium fan flashing	34ºF - 36ºF,default 36ºF (1ºC - 2ºC, default 2ºC)	1: Outdoor air & coil differential, 2: Coil temperature only.

ERROR CODE DISPLAY

- Should there be any fault happen with the main board, the relevant error code will be shown on the temperature display area.
- If there multiple faults happen at the same time, the error codes will be shown one after another.
- System will alternate the display of error codes and the room temperature.
- Error codes are listed in the Table 4.

TABLE 4 – ERROR CODES

Fault	Error code
Room sensor failure	E1
Indoor coil sensor failure	E2
Outdoor coil sensor failure	E3
Insufficient of refrigerant	E4
Compressor overload	E5
Not Used	E6
Not Used	E7
Outdoor air sensor failure	E8
Wall pad room sensor failure	E9

INFRARED SIGNAL RECEPTION

- The system is able to receive the infrared wireless commands from non-LCD handset.

MASTER-SLAVE OPERATION

- It is possible to control the air conditioner in a master-slave relationship if the wall pad is connected to a gateway card.
- If the master controller is working in global control mode, the key lock LED flashes on the wall pad. None of the button or infra-red reception will be acknowledged until the master controller gives up global control mode.

ERROR CODES & TROUBLESHOOTING

E1: Room sensor fault. Usually this is a faulty connection (plug), damaged lead or a faulty sensor.

Action: First verify that the **White** plug is connected to the socket on main board labeled "RM". Disconnect the **White** plug and measure the resistance of the thermistor with a digital multimeter as shown in Fig 19. With a thermocouple connected to a digital thermocouple reader, place the thermocouple next to the thermistor sensor to identify the "expected" temperature that thermistor is measuring. Compare the measured resistance value with the expected value in Table 1. If the thermistor is more than 9ºF (5ºC) out of calibration then replace the thermistor. When replacing the thermistor, install the cable so that it extends downward from the copper pocket on the coil.

E2: Inside coil sensor fault. Usually this is a faulty connection (2 plugs), damaged lead or a faulty sensor.

Action: First verify that the **Yellow** plug is connected to the socket on the main board labeled "ID". Disconnect the **Yellow** plug and measure the resistance of the thermistor as outlined in E1 above and replace the thermistor if necessary. Attach the thermocouple to the coil next to the thermistor sensor (ref Fig 22)

E3: Outside coil sensor fault. Usually this is a faulty connection (2 plugs), damaged lead or a faulty sensor.

Action: First verify that the **Red** plug is connected to the socket on the main board labeled "OD". Disconnect the **Red** plug and measure the resistance of the thermistor as outlined in E1 above and replace the thermistor if necessary. Attach the thermocouple to the coil next to the thermistor sensor (ref Fig 21)

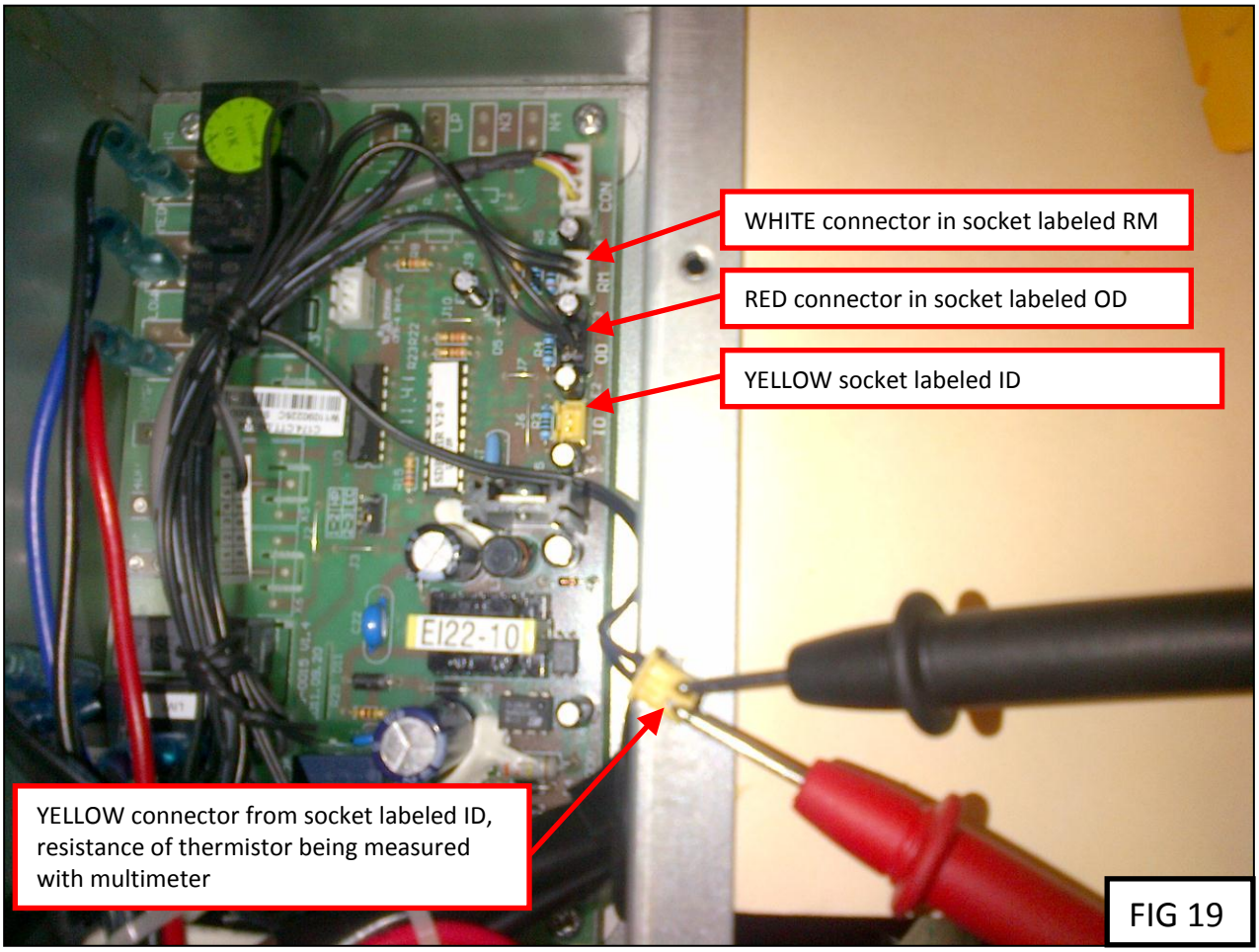

FIG 19

ERROR CODES & TROUBLESHOOTING (cont):

E4: Indicates either a lack of refrigerant, the compressor is not running, or the thermistor is out of calibration.

Action: Check that the compressor is running by listening. If it is apparent that the compressor is running, then check the temperature differential across the evaporator by measuring the temperature of the return air at inlet filters and measuring the temperature of the discharge air at the grilles. This temperature differential should be between 25ºF and 32ºF (14ºC and 18ºC) with the fan set on HI speed. If the temperature differential is less than 25ºF (14ºC), the reason could be a lack of refrigerant or a faulty thermistor. Please check the actual thermistor temperature on the coils with the following procedure.

<u>Procedure for Measuring Coil Temperatures Using the Control Panel:</u>

1) Set the inside fan to run on HI.
2) While pressing and holding the TEMP DOWN pushbutton, press the MODE pushbutton.
3) Continue pressing both pushbuttons for approximately 5 seconds until the amber LOCK LED illuminates (next to the Key symbol). Release both pushbuttons.
4) Then press and hold both the TEMP DOWN and the SLEEP pushbuttons together for about 1 second until the green MED SPEED LED is flashing. Release both pushbuttons. The display is now reading the temperature of the outside coil.
5) Then press the TEMP UP pushbutton once. This should result in the green HI SPEED LED flashing. The display is now reading the temperature of the inside coil. This temperature will usually be between 41ºF and 53ºF (5ºC and 12ºC).
6) The temperature differential between the outside and inside coils should be less than 25ºF (14ºC). If this temperature differential is 25ºF (14ºC) or greater, the thermistor may be out of calibration. Measure the resistance of the thermistor as outlined in E1 above and replace the thermistor if necessary. Note: A temperature differential greater than 43ºF (24ºC) can also be caused by a lack of refrigerant.

E5: If this message is displayed during the Heating mode, it indicates that the inside coil is too hot.
If this message is displayed during the Cooling mode, it indicates that the outside coil is too hot.

Action: During cooling, the E5 will appear if the outside coil temperature exceeds 154ºF (68ºC). This is an indication that the condenser air flow severely reduced or non-existent. Step 4 in the above procedure describes how to display the temperature of the outside coil. If fans are running and the E5 message is still displayed, verify the thermistor operation as outlined in E3 above. If fans are running and the thermistor is verified, then replace the main control board.

E6,E7: These codes are not implemented in this system. If present, then change the main control board

E8: This indicates an outdoor air sensor failure. This is usually a faulty connection (2 plugs), damaged lead or a faulty sensor.

Action: Measure the resistance of the thermistor as outlined in E1 above and replace the thermistor if necessary.

E9: This indicates a wall pad room sensor.

Action: Replace wall mounted thermostat assembly.

When attempting to diagnose a fault over the phone, please ask the following questions.
Also it is usually possible to direct the customer to extract thermistor temperature data as described before. This can make fault finding more accurate.

1: Is there now or have there been any error codes displayed?
2: Does the display board appear normal? Are the displayed temperatures between 61ºF and 86ºF (16ºC and 30ºC)?
3: In heating or cooling modes, can the displayed temperatures be altered via the up /down buttons from 61ºF to 86ºF (16ºC to 30ºC)?
4: Is the display showing "0"?
5: Is the display showing an unusual figure?
6: When the unit is set to "FAN" only, does the inside fan have 3 speeds? Does the inside fan blow air?
7: Can the compressor be heard running?

Error codes are important clues. Refer to preceding pages.
Extracting coil temperatures via the display is also vital in many diagnoses.
A broken control cable or displaced plug of the control cable will result in either the display being blank or displaying a "0".
If an unusual figure is displayed, it might be attributed to the vehicle's DC power supply or the vehicle's DC converter being out of adjustment.

Typical faults or complaints

1: Any complaint accompanied with an error code, see earlier pages.

2: Unit will not work and no display is evident.
Check the following in order:
a. Verify that the main ECB breaker is set to ON
b. Verify that AC power is present at the output from the ECB
c. Verify that the 4-wire control cable is plugged into the thermostat module in the inside plenum. Reference Fig 23.
d. Verify the AC power connection at the underside of unit.
e. Verify that the AC fuse is not blown on the main board. NOTE: A faulty fan motor can cause a blown fuse.
f. Verify all electrical connections on the main board.
    a. Verify that the power supply is functioning correctly by checking the voltages at the breakaway plug between the control cable and the display in the plenum. If the DC voltage is not present, a faulty power supply is likely the reason.

3: Unit drops out the ECB breaker:
Use a 500V megohmmeter (megger) to check for ground leakage. A reading of 10Megohm or greater indicates no ground leakage; a reading of less than 10Megohm indicates a faulty component. Disconnect each AC load (such as the fan motor, the compressor, etc.), one-by-one until a reading of 10Megohm or greater is obtained. The last load disconnected is the faulty component to be replaced.

4: Compressor will not start:
Check that the control board is outputting to the compressor.(yellow wire from compressor relay).
Use a clamp ammeter to check for current to compressor. Continuous current above 14 amps indicates a faulty compressor. Check winding continuity with a digital multimeter.
Typical measurements for the compressor are as follows:
Main Winding: 0.8 ohms
Start Winding: 2.1 ohms
Resistance to earth: Minimum 20 Meg Ω

Typical faults or complaints (cont)

5: During the cooling mode, the compressor stops.

In this fault condition the unit ceases to cool but the display temperatures indicates a very cool value - perhaps as low as 50ºF (10C). This is typical of an inside coil icing up. The thermistor detects that the coil is at or below zero and turns off the compressor until temperature rises to 53ºF(12ºC), whereupon the compressor will restart. This situation is usually associated with the unit running for a prolonged period on low fan speed particularly in high humidity conditions. This problem can usually be resolved by running the unit on a higher speed in the "Manual" mode and not using the "Auto" fan setting.
Check also that the return air filters are clean.

6: During heating mode, the unit stops heating, fan stops, and the red heat LED blinks.

This fault condition indicates that the unit has entered the de-ice mode to rid itself of frost on the outside coils. The unit will restart automatically in 5 to 10 minutes. It should be noted that if the display temp drops to a low figure, on resumption of heating, the blinking red light turns to a steady red light, and the fan will be delayed until the inside coil is warmed to 90ºF (32ºC). When the inside fan does start there may be a momentary puff of vapor. This is normal.

7: In very cold conditions the compressor can be heard running but the inside fan does not start.

Be patient, in very cold conditions the unit needs time to warm sufficiently to start producing warm air.

8: Compressor transmits excessive vibration.

Check that pipe work is not touching other pipes

9: During heating, the unit cycles regularly, the temperature display indicates the room temperature to be between 75ºF and 82ºF (24ºC to 28ºC) however the average temperature in the cabin is much lower.

This condition can be caused by a faulty duct which is causing the warm air to short cycle.
To see if this is the cause, disassemble the fascia from the inside plenum (4 screws) and examine carefully the extension duct for leaks, particularly where it joins the horizontal duct.
A leaking duct will short cycle warm air onto the return air sensor causing the compressor to close down prematurely. Repair any leaks and reassemble.

10: During cooling, the unit cycles regularly, the temperature display indicates the room temperature to be between 71ºF and 77ºF (22ºC and 25ºC) however the average temperature in the cabin is much higher.

This condition can be caused by a faulty duct which is causing the cold air to short cycle.
To see if this is the cause, disassemble the fascia from the inside plenum (4 screws) and examine carefully the extension duct for leaks, particularly where it joins the horizontal duct.
A leaking duct will short cycle cold air onto the return air sensor causing the compressor to close down prematurely. Repair any leaks and reassemble.

11: Water drips from the inside plenum when the unit is in cooling mode. Ingress of water on cooling mode may be due to either of four conditions.

1: The unit is installed more than 5° out of level, particularly nose down.
2: The drain holes in the evaporator area are blocked.
3: Condensate that has drained onto the roof, has re-entered the installation hole either under the roof seal of the air conditioner or a roof seam near the unit is faulty. If case 3 appears likely, the unit should be reinstalled using a new sealing gasket and following the Atwood installation instructions explicitly.
If there is a roof seam involved, clean the seam area thoroughly and reseal with a silicone sealant compatible with your roofing material.
Please Note: If water "pools" around the air conditioner (i.e. the roof has sagged around the air conditioner) then the cabin manufacturer should be consulted.

Typical faults or complaints (cont)

11: Water drips from the inside plenum when the unit is in cooling mode. Ingress of water on cooling mode may be due to either of four conditions (cont.)

4: In high humidity areas, condensate may occur on the underside of the evaporator tray above the inside plenum. This usually associated with running the unit on low speed for a prolonged time period. Under these conditions use the high or medium speeds and avoid "Auto" which can cause the inside fan to drop to low speed as the set point temperature is approached.

12: Water drips from the inside plenum only when it rains.
Check condition 11, point 3 above.

13: Unit does not turn on. No display lights on the flip down display.
Proceed to check the following in order.

1: Check circuit breaker is on and the van has power.

2: Unscrew the inside plenum (4 screws) and disconnect plenum from control cable via the 4 pin plug. With a multimeter, check power at inlet junction block is 110VAC. If OK, shift multimeter to 12V DC range and verify the voltage across the control cable conductors.
If the correct voltages are detected, then suspect a break between this plug and the display module. Inspect plug pins. Disassemble the display and check the plug to board is OK. (ref. Fig 23) If the voltages can be detected right up to the display, replace display.

3: If the voltages cannot be detected at the breakaway plug, then the problem is probably in the main control board enclosure. Remove the canopy from the unit. Isolate the power to the air conditioner. Remove enclosure lid (RHS) to gain access to the control board. First check the fuse on the board. If this fuse is blown it **may** indicate a fan motor fault. If the fuse is blown, replace with a M205 S/Blow 5A 20 x 5. If the fuse blows again, start investigating for a faulty condenser, evaporator motor or R/V. If the fuse is not an issue, then one needs to investigate the vehicle's DC power supply providing power to the main board.

Recharging out-of-warranty air conditioners in the field:
Occasionally a leak develops in the cooling system which allows refrigerant to escape.
If the following 3 conditions are true, then a leak is the most probable reason (assuming that the unit is in cooling mode and the outside temperature is close to 95ºF (35ºC) and the inside temperature is 81ºF (27ºC):

1: With the inside fan set to HI, the difference in temperature between the inside return air and the discharge air is <u>less</u> than 25ºF (14ºC).
2: The inside coil temperature as measured by the thermistor is more than 57ºF (14ºC). Refer to E2 fault indicator and corrective action earlier in manual.
3: The suction pressure is less than 58 psi (400 Kpa).

Leak Search Process

1. First examine the hermetic system for possible leaks
2. With an electronic leak detector, check all fittings, joints, and tubing.
3. Examine all solder joints. Any leak found in solder joints etc. will require the unit to have any remaining refrigerant recovered, the leak repaired, and the unit evacuated and recharged with 30 oz. (850 grams) of refrigerant.
4. If a leak is detected, at a fitting and the leak has been rectified, refrigerant can be added. Refrigerant should be added until the suction pressure is above 58 psi (400Kpa), the difference between the temperature of the inside return air and the discharge air is greater than 25ºF (14ºC) and the inside coil temperature is below 57ºF (14ºC). Note: Sometimes all 3 conditions cannot be met so add refrigerant until 2 of the 3 conditions are met.

The use of Independent generators or inverters:

Failure to start the Air Conditioner:

1: Check that the generator or inverter is rated at 2.8 KW or greater.
2: Check that no other accessories are making a demand on the power load.
To check on possible hidden loads, directly wire the air conditioner to the generator or inverter. If unit starts OK then advise the client to identify and isolate the extra electrical load.

The display panel has an unusual display of numerals however the unit performs normally on AC power:

1: This is a sign of a poor waveform being generated.
Advise client to have generator repaired or replaced with a higher quality unit.

Table 1 - Thermistor Temperature vs Resistance Relationship

Temperature °C	Temperature °F	Resistance kΩ
-10	14	45
-9	15.8	43
-8	17.6	41
-7	19.4	39
-6	21.2	37
-5	23	36
-4	24.8	34
-3	26.6	32
-2	28.4	31
-1	30.2	30
0	32	28
1	33.8	27
2	35.6	26
3	37.4	25
4	39.2	24
5	41	23
6	42.8	22
7	44.6	21
8	46.4	20
9	48.2	19
10	50	18
11	51.8	17.5
12	53.6	17
13	55.4	16
14	57.2	15.5
15	59	15
16	60.8	14.3
17	62.6	13.7
18	64.4	13
19	66.2	12.6
20	68	12.2
21	69.8	11.7
22	71.6	11.2
23	73.4	10.8
24	75.2	10.4
25	77	10
26	78.8	9.6
27	80.6	9.2
28	82.4	8.9
29	84.2	8.6

Temperature °C	Temperature °F	Resistance kΩ
30	86	8.3
31	87.8	8
32	89.6	7.7
33	91.4	7.4
34	93.2	7.1
35	95	6.8
36	96.8	6.6
37	98.6	6.4
38	100.4	6.1
39	102.2	5.9
40	104	5.7
41	105.8	5.5
42	107.6	5.3
43	109.4	5.2
44	111.2	5
45	113	4.8
46	114.8	4.6
47	116.6	4.5
48	118.4	4.4
49	120.2	4.2
50	122	4.1
51	123.8	3.9
52	125.6	3.8
53	127.4	3.7
54	129.2	3.6
55	131	3.5
56	132.8	3.3
57	134.6	3.25
58	136.4	3.1
59	138.2	3
60	140	2.9
61	141.8	2.8
62	143.6	2.75
63	145.4	2.7
64	147.2	2.6
65	149	2.5
66	150.8	2.45
67	152.6	2.4
68	154.4	2.3
69	156.2	2.1

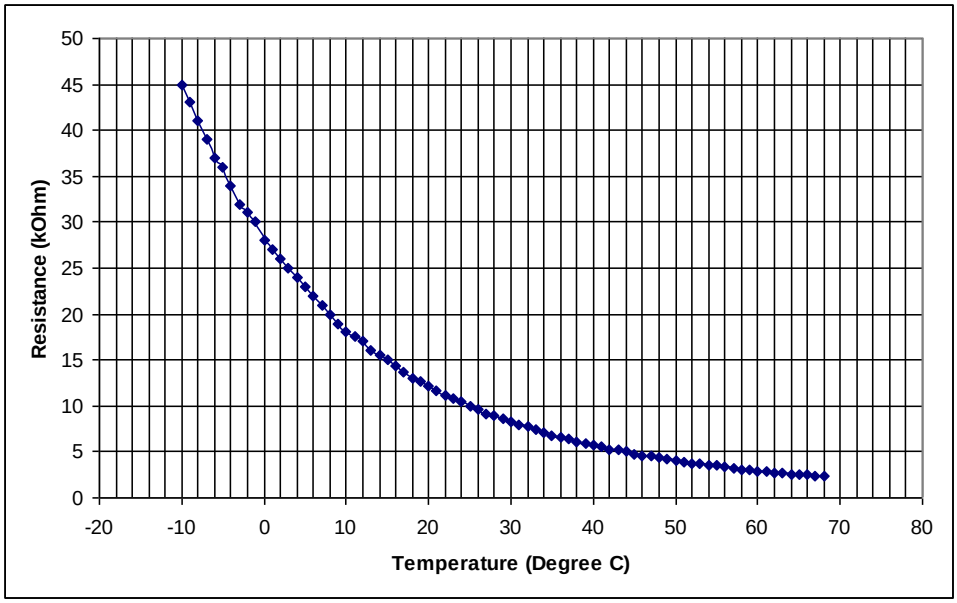

SPECIFICATIONS

	Models AC 1351/AC1361	Models AC 1501/AC1511
Electrical rating:	115V 60HZ	115V 60HZ
Nom. Cooling capacity	13500 BTU/H	15000 BTU/H
Input watts cooling	1400 W	1725 W
Nom. Heating capacity	--------	15000 BTU/H
Max. Rated current cooling	12.2A	15A
L/R Amps	50.5 A	63A
Inside air delivery	318 cfm (150 l/s)	318 cfm (150 l/s)
Installed weight	84 lbs (38 Kg)	84 lbs (38 Kg)
Overall height	13.62 inch (346 mm)	13.62 inch (346 mm)
Overall width	28.15 inch (715 mm)	28.15 inch (715 mm)
Overall length	41.34 inch (1050 mm)	41.34 inch (1050 mm)
Inside plenum height	2.56 inch (65 mm)	2.56 inch (65 mm)
Inside plenum width	21.06 inch (535 mm)	21.06 inch (535 mm)
Inside plenum length	21.85 inch (555 mm)	21.85 inch (555 mm)
Plenum weight	5.29 lbs (2.4 Kg)	5.29 lbs (2.4 Kg)
Refrigerant charge	18 oz (510 gm) R-410A	24 oz (670 gm) R-410A
Compressor:	Rechi Model: 44A281B Run capacitor 60 uf 250 V	LG Model: GKS134CAB Run capacitor 50 uF 250V
Fan motor (inside):	Solon YYF95-70-4D2 70 watt 1.2 Amps Run Capacitor: 10uf 250 V	Solon YYF95-70-4D2 70 watt 1.2 Amps Run Capacitor: 10 uF 250V
Fan motor (outside):	Solon YYF95-75-4D2 75 watt 1.3 Amps Run Capacitor: 10uf 250 V	Solon YYF95-75-4D2 75 watt 1.3 Amps Run Capacitor: 10uF 250V
Electronic control board:	Saturn type: C115CTTDB0	Saturn type: C115CTTDB0
Exterior power supply	Saturn 115v / 12v DC	Saturn 115v / 12v DC
Inside electronic Display	Saturn	Saturn

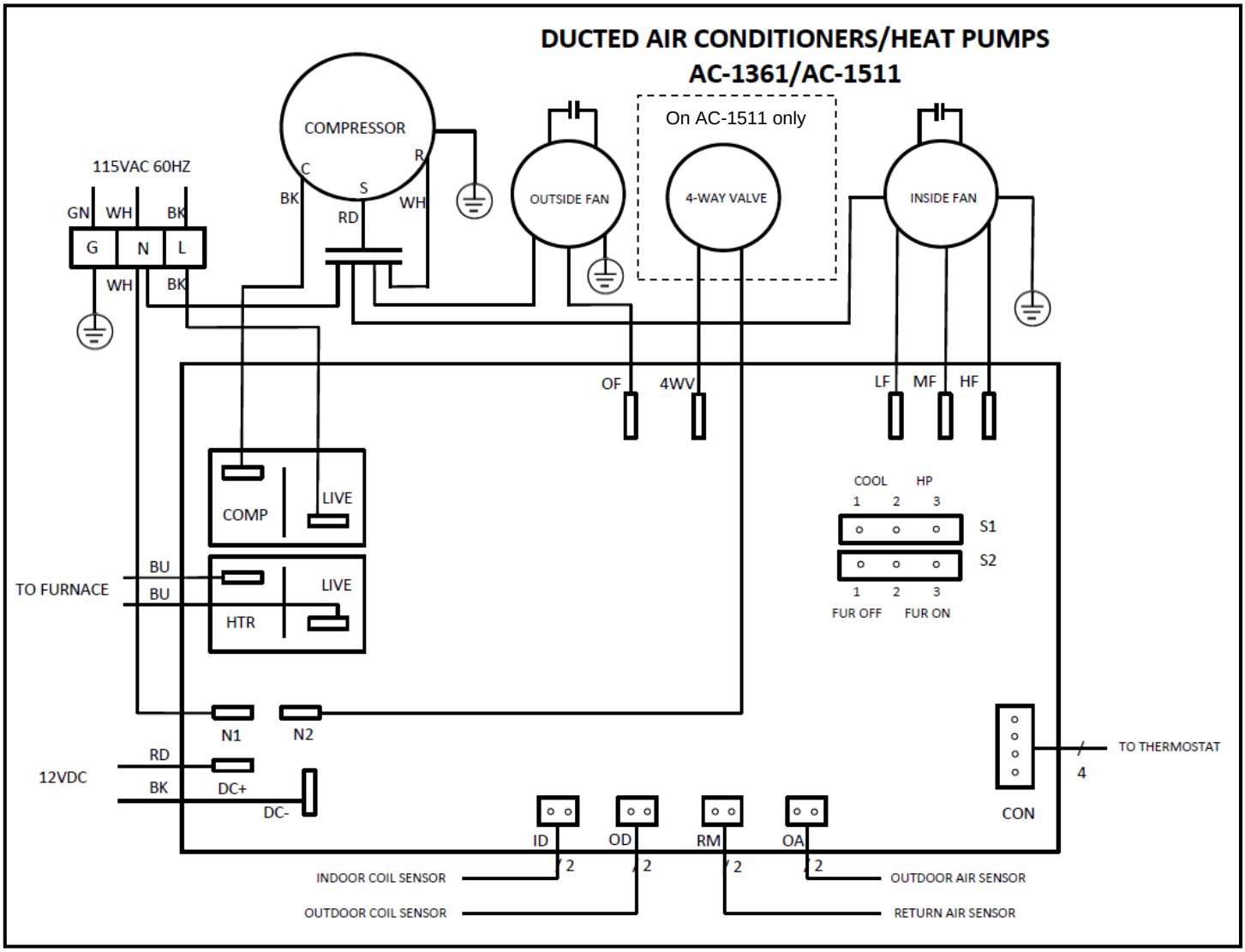
DUCTED AIR CONDITIONERS/HEAT PUMPS
AC-1361/AC-1511
COMPRESSOR
C
R
S
BK
WH
RD
115VAC 60HZ
GN
WH
BK
G
N
L
WH
BK
OUTSIDE FAN
On AC-1511 only
4-WAY VALVE
INSIDE FAN
OF
4WV
LF
MF
HF
COMP
LIVE
TO FURNACE
BU
BU
LIVE
HTR
COOL
HP
1
2
3
S1
S2
1
2
3
FUR OFF
FUR ON
N1
N2
12VDC
RD
BK
DC+
DC-
TO THERMOSTAT
4
CON
ID
OD
RM
OA
2
2
2
2
INDOOR COIL SENSOR
OUTDOOR COIL SENSOR
OUTDOOR AIR SENSOR
RETURN AIR SENSOR

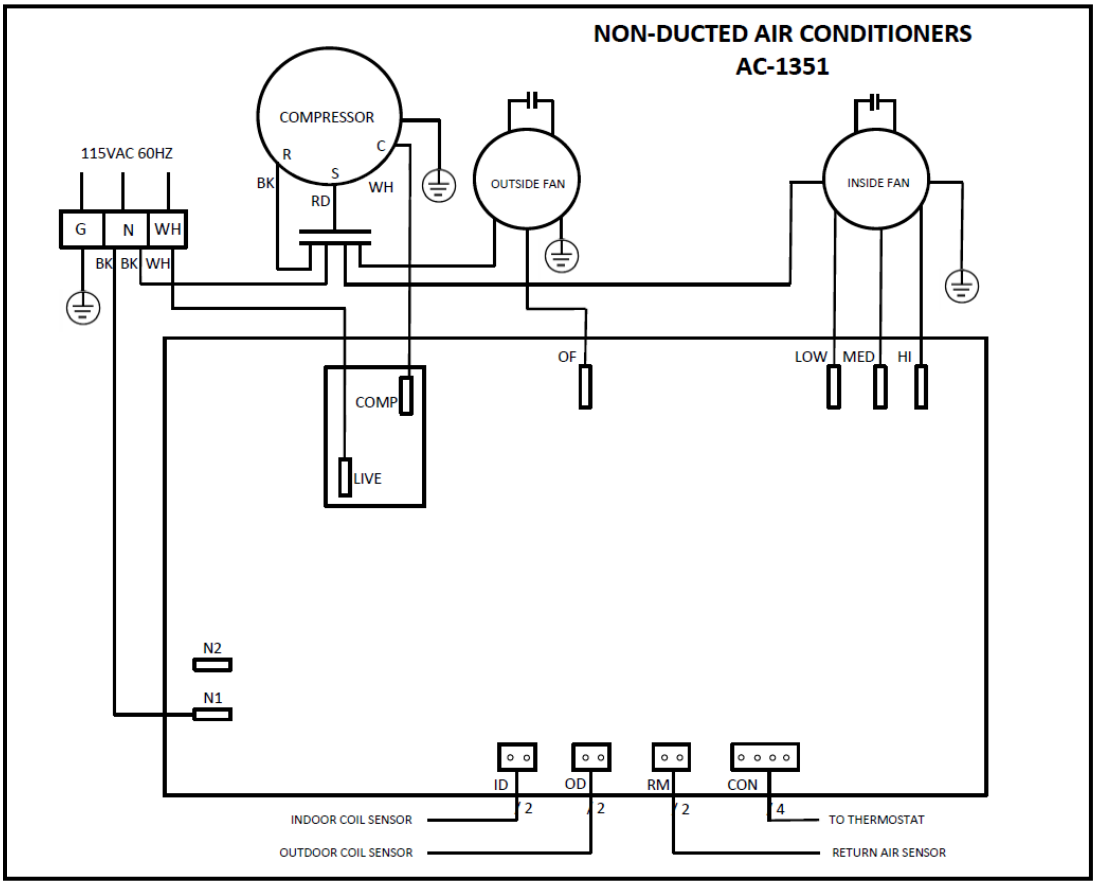
NON-DUCTED AIR CONDITIONERS
AC-1351
COMPRESSOR
R
C
S
BK
WH
RD
115VAC 60HZ
G
N
WH
BK
BK
WH
OUTSIDE FAN
INSIDE FAN
OF
LOW
MED
HI
COMP
LIVE
N2
N1
ID
OD
RM
CON
2
2
2
4
INDOOR COIL SENSOR
OUTDOOR COIL SENSOR
TO THERMOSTAT
RETURN AIR SENSOR

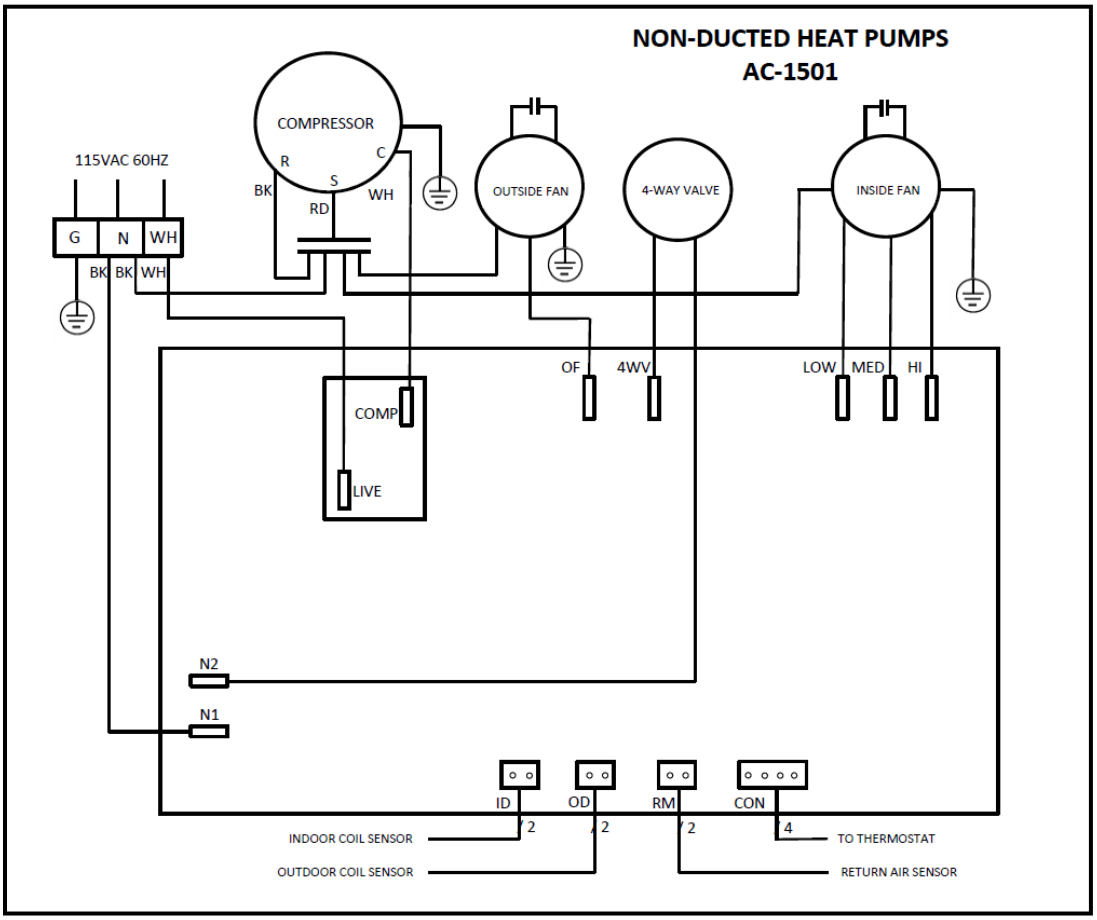
NON-DUCTED HEAT PUMPS
AC-1501
COMPRESSOR
R
C
S
BK
WH
RD
115VAC 60HZ
G
N
WH
BK
BK
WH
OUTSIDE FAN
4-WAY VALVE
INSIDE FAN
OF
4WV
LOW
MED
HI
COMP
LIVE
N2
N1
ID
OD
RM
CON
2
2
2
4
INDOOR COIL SENSOR
OUTDOOR COIL SENSOR
TO THERMOSTAT
RETURN AIR SENSOR

View of Compressor inside Rooftop Unit

FIG 21

FIG 22