Dometic® The Sign of Comfort

INSTALLATION & OPERATING INSTRUCTIONS

CARAVAN ROOF MOUNT AIR CONDITIONER
MODEL CAL 136.301

INCLUDES ELECTRIC HEAT KIT

IMPORTANT INSTRUCTIONS MUST STAY WITH UNIT OWNER — READ CAREFULLY

WARNING

THIS UNIT MUST BE SERVICED BY AN AUTHORIZED SERVICEMAN. MODIFICATION OF THE APPLIANCE CAN BE EXTREMELY HAZARDOUS AND COULD LEAD TO SERIOUS INJURY OR DEATH.

REVISION
Form No, 3104650.027 1/04
(Replaces 3104650.019)
©2004 Dometic Corp
Lagrange, I46761

1. GENERAL INFORMATION

A. THREE SPECIFIC NEEDS:

1. Installation opening.
   Cut through roof and ceiling.

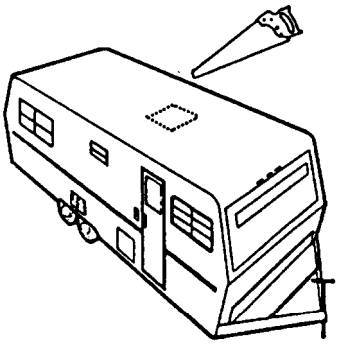

2. Additional wiring.
   100V 50/60 Hz. — 20 Amp

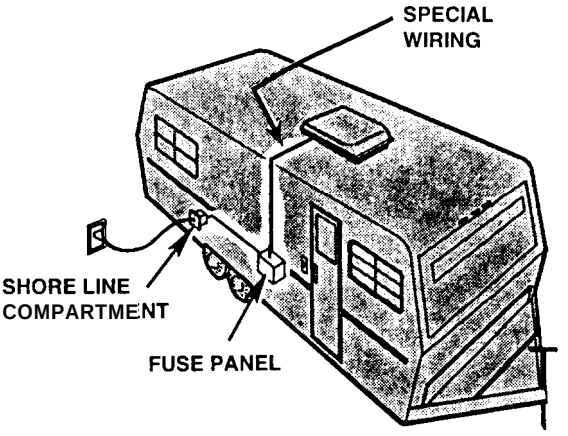

3. Power must be above 90V- and frequency must be 50/60 Hz at all times.

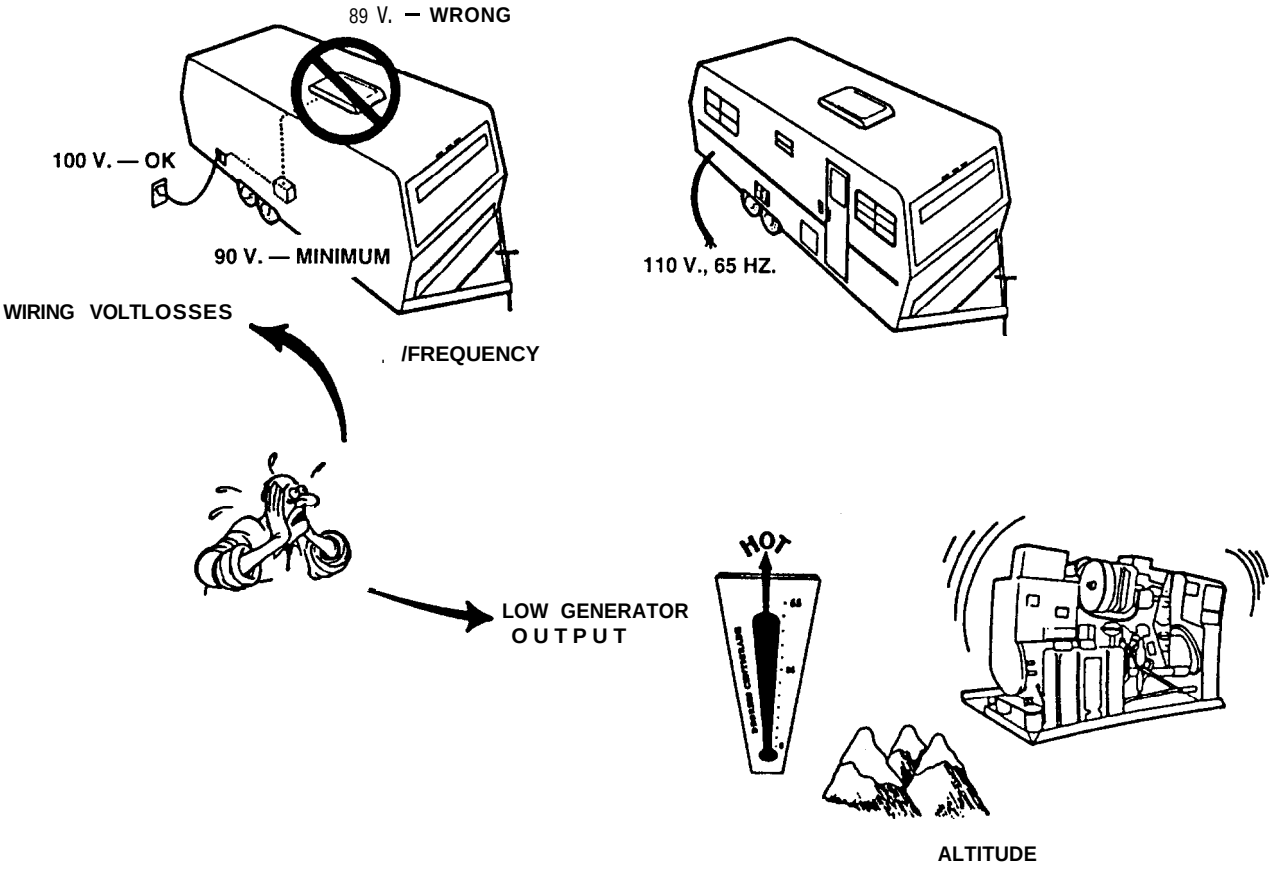

B. SPECIFICATIONS (FIG. 1.B)

	Air Conditioner		Electric Heater	
Cycles	50 Hz	60 Hz	50 Hz	60Hz
Nominal Capacity (KW)	3.1	3.8	1.3	1.5
Full Load Amps (Comp/Htr)	12.6	12.8	12.8	15.3
Full Load Amps (Fan Motor)	3.4	3.6	3.4	3.6
Lock Rotor Amps (Compressor)	71 .O	66.0	– –	– –
Lock Rotor Amps (Fan Motor)	9.0	8.0	9.0	8.0
Total Input Power (KW)	1.3	1.6	1.7	1.9
Electrical Rating	100 Volt; 50/60 Hz.; 1 Ph.			
Minimum Wire Size	Up to 8 meters, use 2.5mm³			
Circuit Protection	20 amp Time Delay Fuse or 20 amp Circuit Breaker, Time Delay			

FIG. I.B

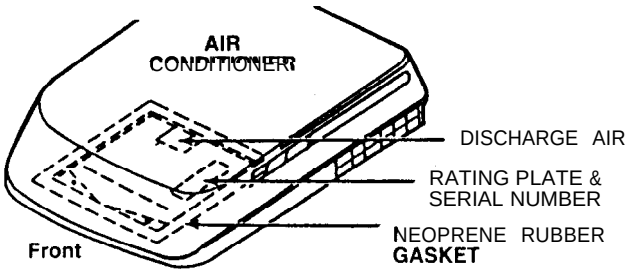

** Normal Min.	1 Unit	3.5 KW
Generator Size	2 Units	5.0 KW

** The Manufacturer gives only general guidelines for Generator requirements. These Generator requirements come from experiences consumers have with our equipment in field applications. When sizing Generators, the total electrical power consumption of the Caravan must be considered. Keep in mind that Generators lose power because of altitude increases above sea level, high outside temperatures, and lack of maintenance.

NOTE: Some authorities require that this appliance be installed only by an authorized electrician.

2. PRECAUTIONS FOR SAFE INSTALLATION

A. Read these installation and operating instructions thoroughly and carefully before attempting installation of Air Conditioner.

WARNING

IMPROPER INSTALLATION **MAY DAMAGE EQUIPMENT, COULD ENDANGER LIFE, CAUSE SERIOUS INJURY AND/OR PROPERTY DAMAGE.**

B. The Manufacturer will not be liable for any damages or injury due to failure to follow these installation and operating instructions.

C. Installation must comply with all applicable codes and/ or regulations.

D. DO NOT add any devices or accessories to this equipment.

E. This equipment must be serviced only by qualified service personnel. Some areas require installation and service personnel to be licensed.

3. LOCATION

This air conditioner is designed for installation and use on the roof of a Caravan. One or more units may be used on the vehicle. Consider the van's size, roof structure, and cooling requirements when determining your needs.

A. **DESIGN RECOMMENDATIONS**

For one unit installation: The air conditioner should be mounted slightly forward of center (front-to-back) and centered from side-to-side on the van. (FIG. 3.A.I)

For two unit installation: Install one air conditioner 1/3 and one air conditioner 2/3's back from front of van and centered from side-to-side. (FIG. 3.A.2)

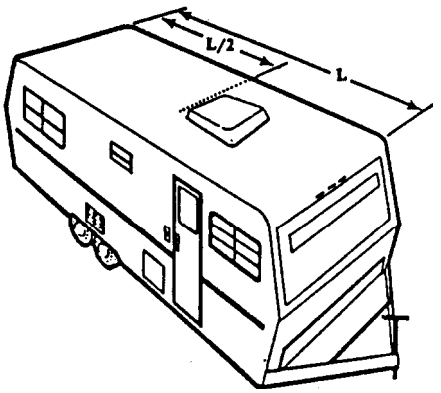

FIG. 3.A.1

L = Length

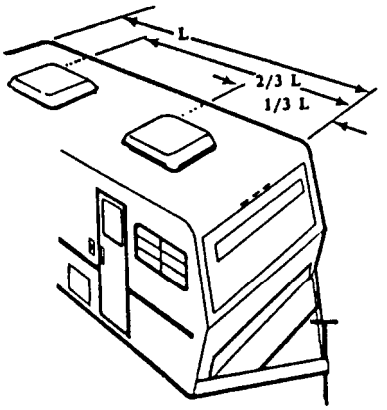

FIG. 3.A.2

B. Many air conditioners can be installed at existing roof vent openings. These openings may be larger or smaller than 355 x 355 mm and will need modification. (FIG. 3.B)

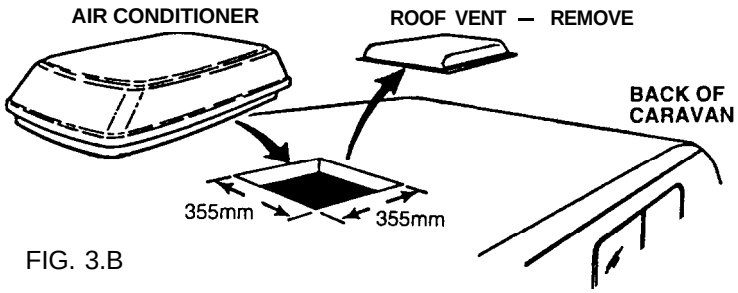

FIG. 3.B

C. Check location acceptability before beginning the installation.

1. If possible, mount the air conditioner in a section of the roof which is both flat and level when the van is parked on a level surface; otherwise, a sideways pitch or forward/backward pitch up to 6 degrees can be tolerated.

FIG. 3.C.1

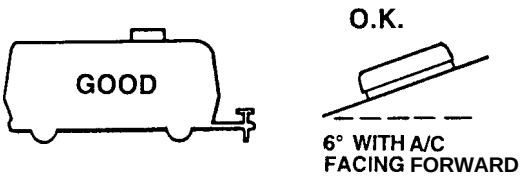

2. Check on the roof to be sure no obstructions are in the area where the air conditioner will be installed.

3. Check inside where the air conditioner air box will be located to insure there will be no interference with door openings, curtains, room dividers, etc. (FIG. 3.C.3)

FIG. 3.C.3

ROOF/AIR BOX CROSS-SECTION

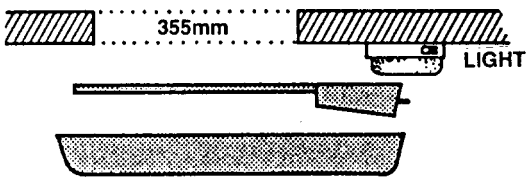

PROHIBITS INSTALLATION

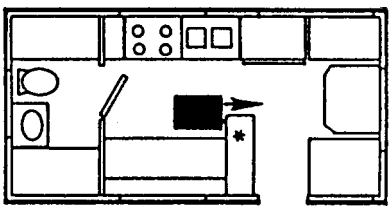

*** CABINET - PROHIBITS USE**

4. Be sure your roof structure is capable of supporting a weight of 65 Kg when the van is in motion. (Normally if the roof can support a static load of approximately 100 Kg it meets this requirement). (FIG. 3.C.4)

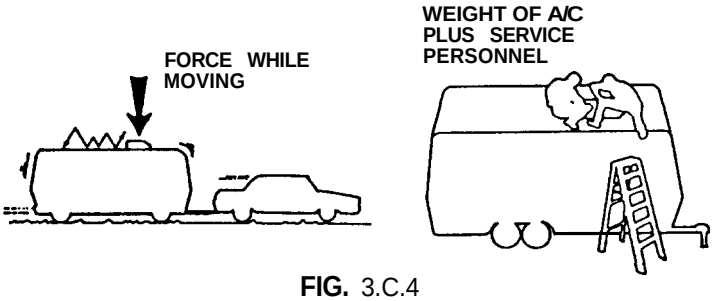

FIG. 3.C.4

4. ROOF PREPARATIONS

WARNING

Disconnect all power supplies to the van, insure the generator is shut off if present, and disconnect the positive battery terminal from the battery before performing any cutting on the van. FAILURE TO FOLLOW THIS INSTRUCTION MAY CREATE A SHOCK HAZARD. (FIG. 4)

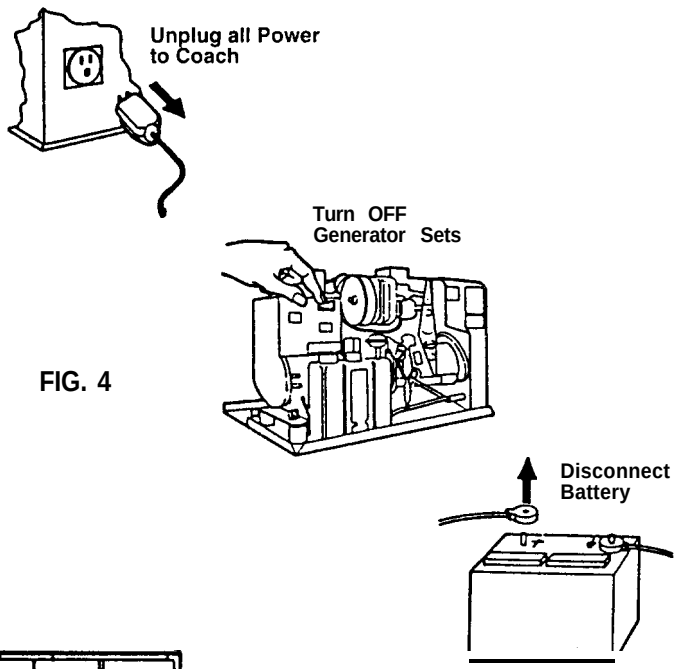

FIG. 4

A. Roof Vent Locations (FIG. 4.A)

1. Remove all screws that secure the vent to the roof and remove the vent from the opening.
2. Remove all sealing compound from around the vent opening.
3. Seal all screw holes and all roof seams with a quality all weather sealant.

FIG. 4.A

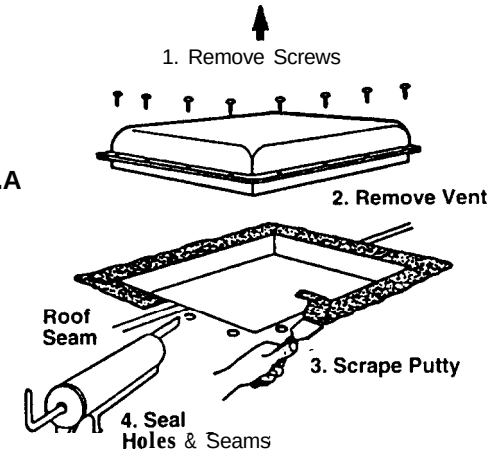

B. **Other:** Cutting new or modifying existing openings. This opening should be located between roof structural members.

1. Mark the 355 x 355 mm opening on the roof with a marker. (FIG. 4.b.1)

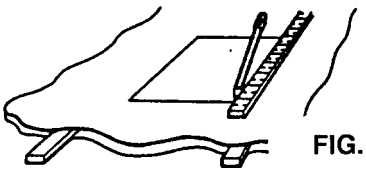

FIG. 4.B.1

2. Carefully cut the opening in the roof. (FIG. 4.b.2)

FIG. 4.B.2)

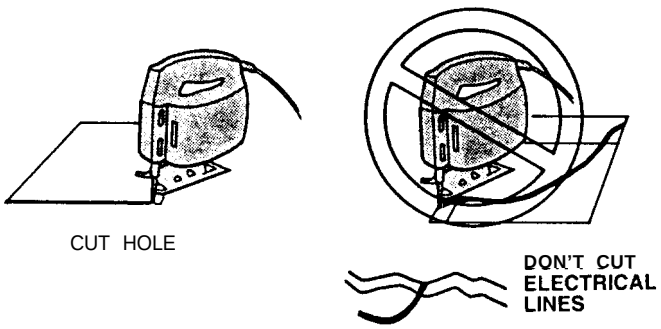

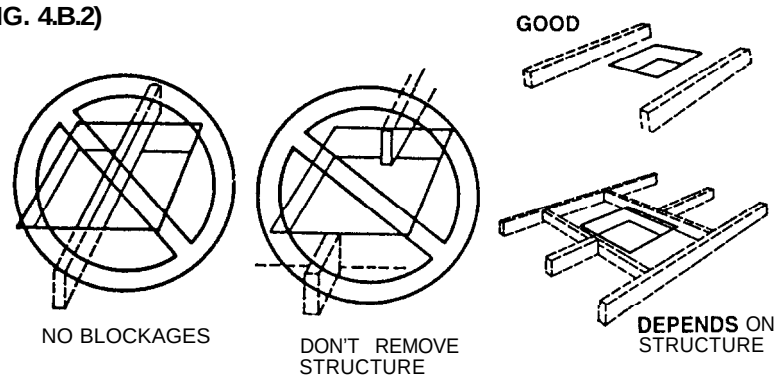

WARNING

There may be electrical wiring located between roof and ceiling. Disconnect all electricity. (FIG. 4)

3. Carefully cut a matching hole through the ceiling of the van. (FIG. 4.B.3)

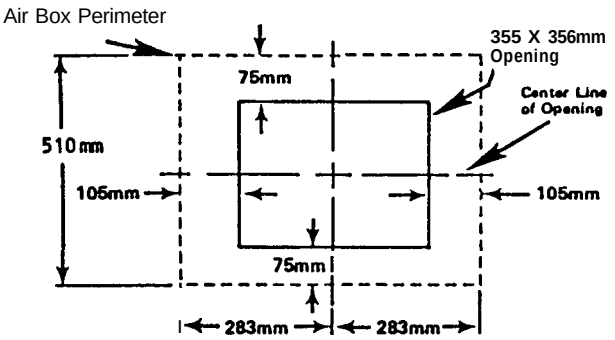

FIG. 4.B.3

4. Seal holes and seams. (FIG. 4.A)

C. Roof Opening Preparations

1. If the opening exceeds **360 x 360** mm, make it smaller by installing spacers or close-off plates.
2. If the opening is smaller than 350 x 350 mm, it will be necessary to enlarge the opening; see FIG. 4.8.
3. Route a grounded power supply line from circuit breaker or fuse box to the roof opening. (FIG. 4.C.3)
   a. The power supply must be a separate circuit, fuse with a 20 amp Time Delay Fuse or 20 amp Circuit Breaker.
   b. The power supply must be grounded 2.5 mm^2 **COPPER** supplyfor distances of 7.5m or less.
   c. The powersupplywiring MUST comply with all applicable regulations and wiring codes.
   d. Depending on entrance location, up to 1/2 meter of supply wire must extend into the roof opening to insure ease of attachment to the air conditioner.
   e. If vent fan was removed, the existing wire may be utilized, provided it is of **proper size and properly fused.**

FIG. 4.C.3

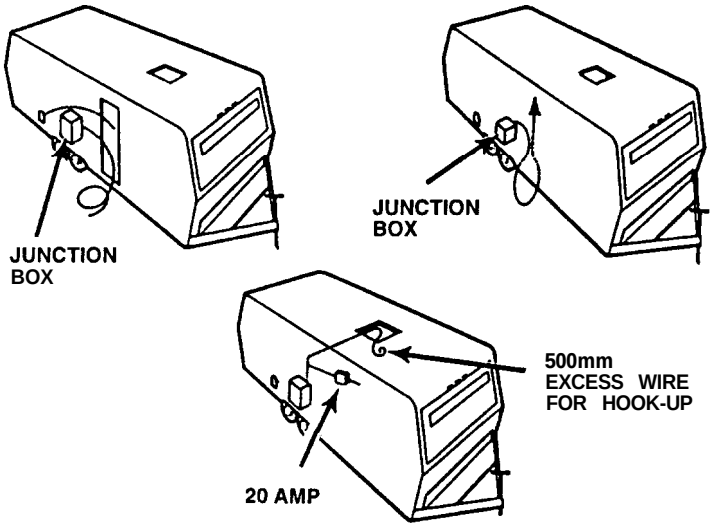

4. Framing is required around the roof opening to insure adequate support, provide a smooth surface for sealing and prevent hot or cold air from being drawn into the opening. This framing should be wood strips 380 x 25 mm X thickness of roof to ceiling distance. A hole for the power supply must be provided. (FIG. 4.C.4.)

FIG. 4.C.4

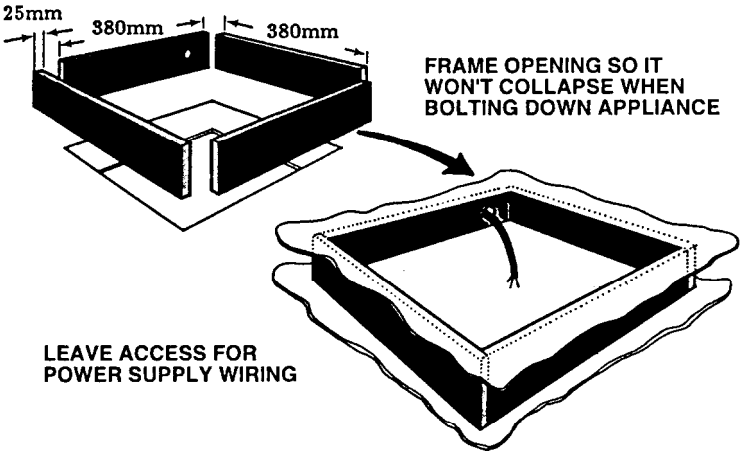

NOTE: Under no circumstances should the roof be constructed to create a low spot where water will accumulate when the air conditioner is installed. This may create a water leak into the interior of the Caravan.

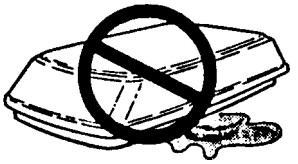

5. PLACING AIR CONDITIONERS ON ROOF

A. Remove the carton from the air conditioner and discard. (FIG. 5.A.1)

FIG. 5.A.1

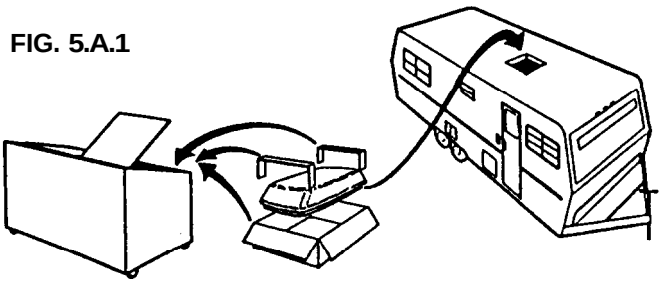

B. LIFT AND PLACE the unit over the prepared roof opening. The blunt end of the air conditioner goes toward the rear of the van. (FIG. 5.B.1)

CAUTION

DO NOT slide the air conditioner across the roof. The rubber gasket attached to the bottom of the air conditioner will not seal properly if damaged or torn by sliding. (FIG. 5.B.2)

C. Center the rubber gasket as near as possible over the opening.

This completes the outside work. Minor adjustments to the air conditioner position may be done from inside the van.

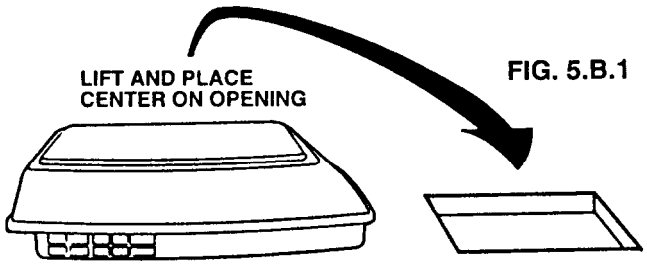

FIG. 5.B.1

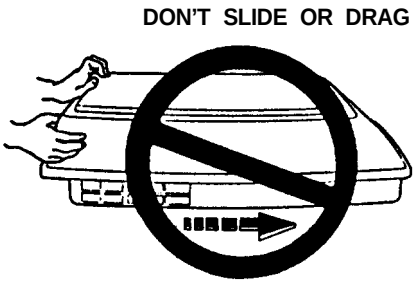

FIG. 5.B.2

6. UPPER DISCHARGE AIR DUCT INSTALLATION (FIG. 6)

The upper discharge air duct is shipped inside the lower discharge air duct attached to the ceiling template.

A. Remove the upper duct from the ceiling template duct and install it over the blower discharge opening.

NOTE: The edge without the flange goes toward the rear of the van.

B. Secure the duct in place with two of the pointed screws provided. There are prepunched holes in the base pan for ease of installation.

FIG. 6

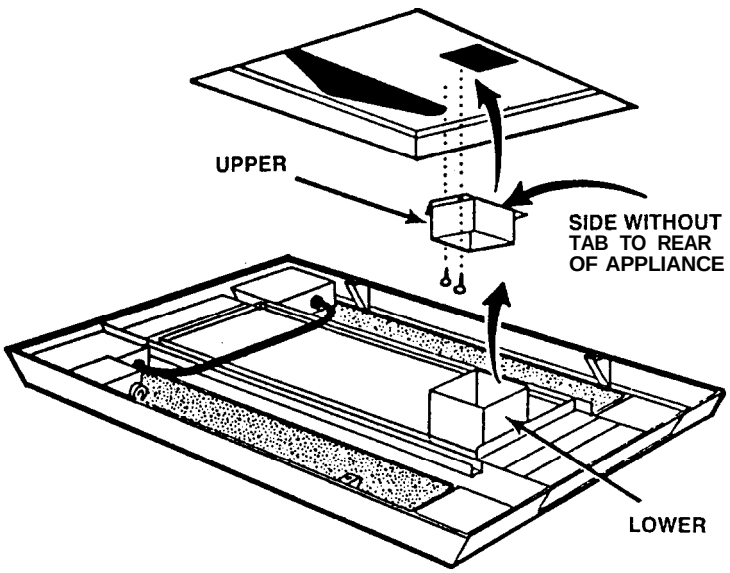

7. CEILING TEMPLATE INSTALLATION

A. Reach through the roof opening and adjust the air conditioner until the gasket is centered on the opening. (FIG. 7.A)

B. Reach up into the return air opening and pull the conduit power cable down for later connection. (FIG. 7.B)

C. Measure the roof thickness:
   1. If the distance is 25 to 50 mm, remove the perforated tabs on the upper discharge air duct and tabs on the lower discharge air duct.
   2. If the distance is 50 to 70 mm, remove the perforated tabs on the lower discharge air duct.
   3. If the distance is 75 to 110 mm, do not remove any of the perforated tabs. (FIG. 7.C)

D. Take the ceiling template and slide the lower discharge air duct over the outside of the upper discharge air duct.

E. Holding the ceiling template in place with one hand, install the three 150 mm long mounting bolts up through theceiling template and into the airconditioner with other hand, until mounting bolts are finger-tight. (FIG. 7.E)

F. Evenly torque the three mounting bolts to 4.5 to 5 NM to secure the air conditioner to the roof and insure a good water seal. The rubber gasket (FIG. 7.A, B, C) should compress to roughly 1/2 of its original 25 mm thickness.

CAUTION

DO NOT **over-tighten the mounting bolts as this may damage the air conditioner base.**

FIG. 7.A., B., C.

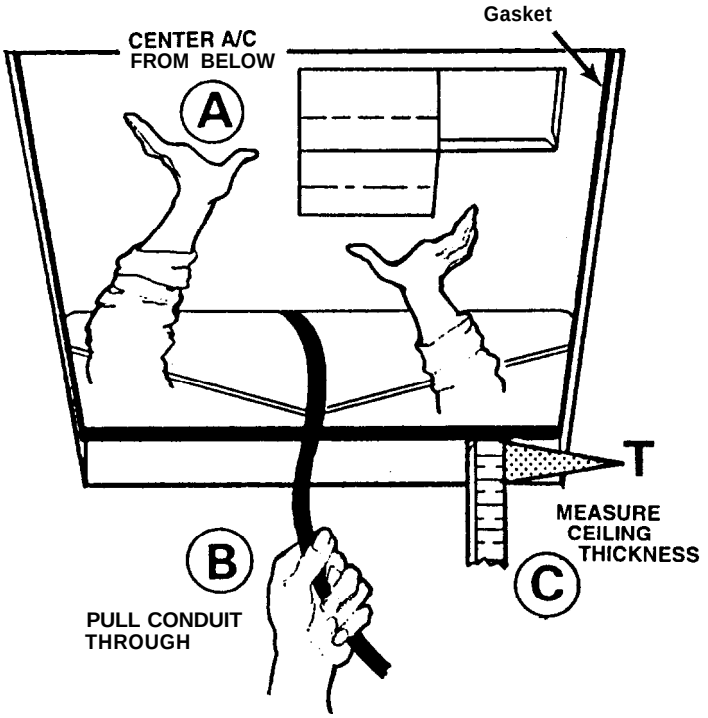

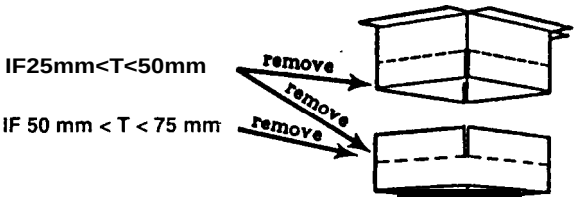

IF 75 mm < T < 110 — INSTALL AS PACKAGED

FIG. 7.D., E.

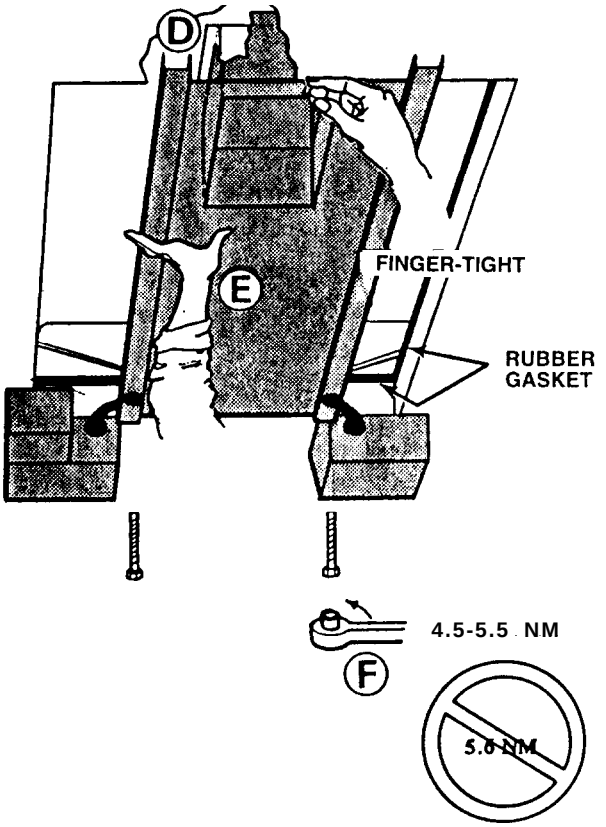

8. CONNECTION OF POWER SUPPLY TO AIR CONDITIONER (FIG. 8)

WARNING

Be sure power supply is OFF before connecting power supply leads to the air conditioner.

A. Route the power supply line, previously installed to the roof opening, into the junction box on the ceiling template.

B. Connect the power supply line to the air conditioner at the terminal block provided in the junction box. Connect red to red, black to black and earth to earth; (P, P, and ⏚ respectively).

C. Tighten the strain relief onto the power supply line, to hold it firmly in place.

D. Carefully push all excess wire back into the junction box and install covers onto the boxes with three blunt tipped screws provided.

E. Plug the electrical 9-wire conduit hanging from the bottom of the air conditioner into the mating connector on the switch box located on the ceiling template.

F. Plug the electrical 2-wire conduit from the heater into the mating connector on the switch box located on ceiling template.

9. AIR BOX INSTALLATION

A. Remove the two return air grills and filters which are shipped loose in the air box. (FIG. 9.A)

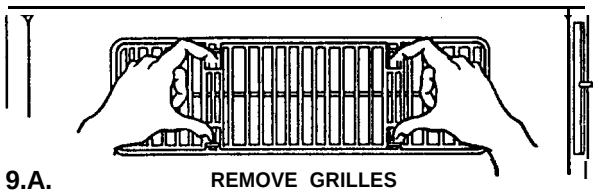

FIG. 9.A. REMOVE GRILLES

B. Slide the front end of the air box over the shafts of the thermostats and selector switch. (FIG. 9.B)

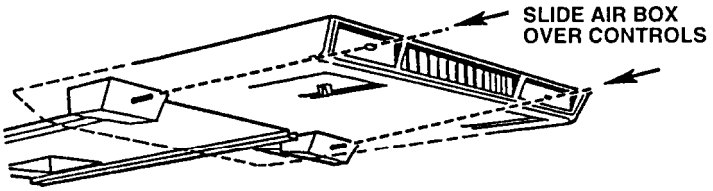

FIG. 9.B.

C. Install the four screws through legs in air box into the prepunched holes in the ceiling template. NOTE: There are three optional mounting holes for which no screws are provided. (FIG. 9.C)

FIG. 8
CEILING TEMPLATE & HEATING ASSEMBLY

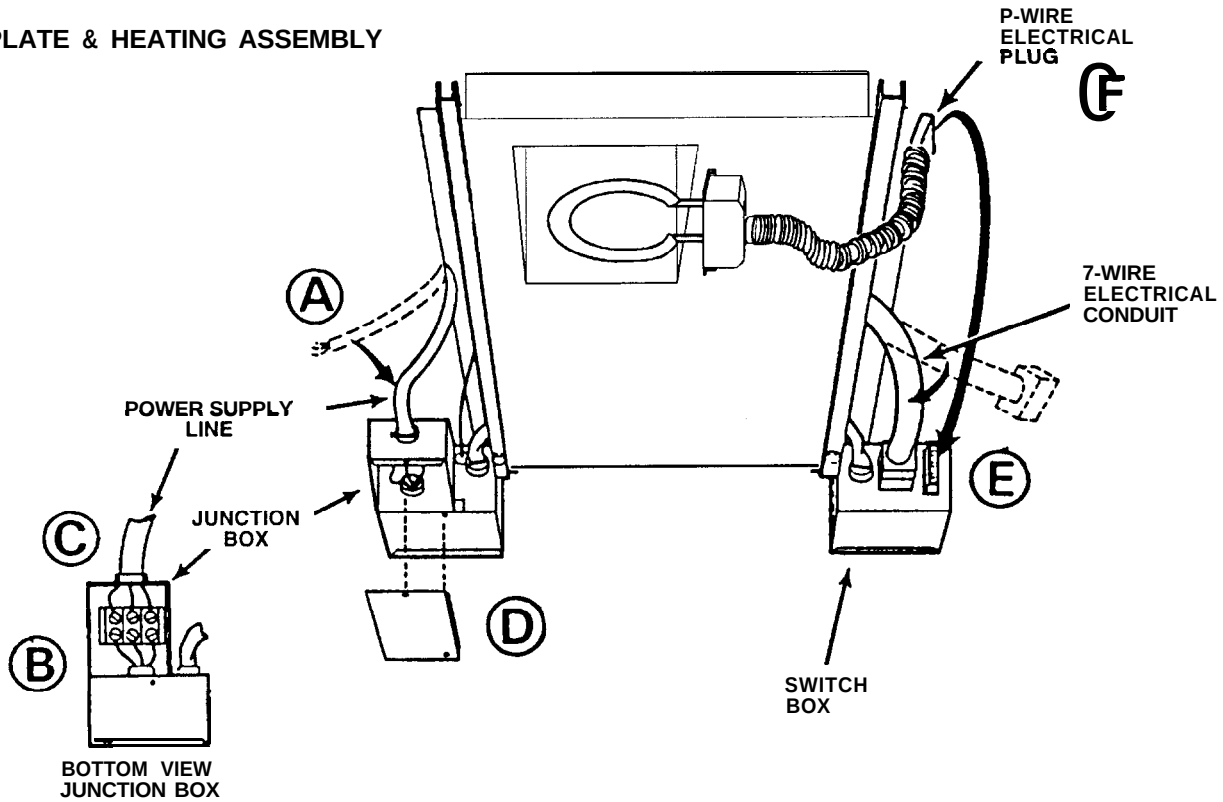

D. Install the return air grills and filters by simply pushing them into place. (FIG. 9.D)

E. Install the two knobs provided on the ends of the thermostat and selector switch shafts.

F. The power supply to the air conditioner may now be turned ON.

G Your air conditioner is now installed and ready for operation, Please read the following instructions before attempting to run the unit.

10. OPERATING INSTRUCTIONS

(Refer to FIG. 7)

A. CONTROLS

1. The thermostat has a temperature range of 18.5°C in Cool (✱) position to 32.5°C in Warm (☼) position. The thermostat controls the unit compressor ON and OFF cycle in the cooling mode and the electric heater ON and OFF cycle in the heating mode.

FIG. 1 O.A.I

2. The selector switch controls the unit fan speeds, and the heating, cooling and fan modes of operation.

FIG. 10.A.2

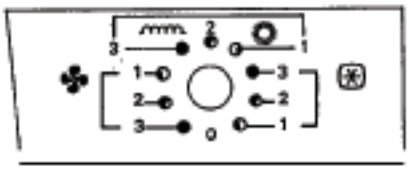

B. COOLING OPERATION

1. Set the thermostat to the position which will give your desired comfort level.
2. The selector switch is to be set as follows:
   a. HIGH COOL: (3✱): Selected when maximum cooling and dehumidifying is required.
   b. MED. COOL: (2✱): Selected when medium cooling is required.
   c. LOW COOL: (1✱): Selected when minimum cooling is required. Normally this position is selected for night-time operation.

The air conditioner compressor will come on and off as cooling is required to maintain your desired temperature level as set at the thermostat.

FIG. 9.C., D., E.

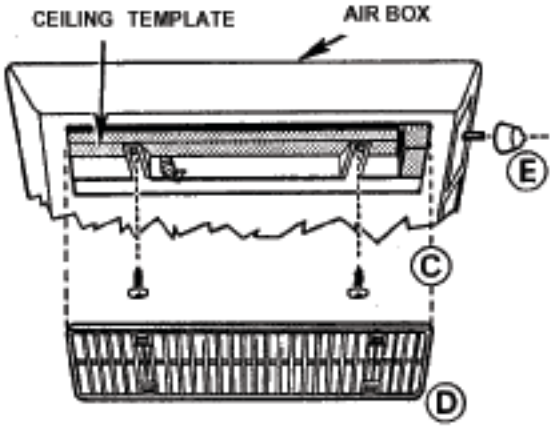

NOTE: The air conditioner blower runs continuously to circulate the air and maintain an even temperature in the van. It does not come on and off with the compressor.

C. FAN OPERATION

When you wish to circulate the air inside your van without heating or cooling, select one of the three fan speeds: (1 ✤ 2 ✤, or 3 ✤). The fan will run continuously and circulate the air in the van.

FIG. 10.B.1

= 25°C

FIG. 10.B.2

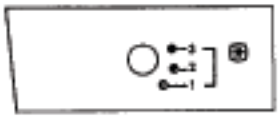

= COOLING

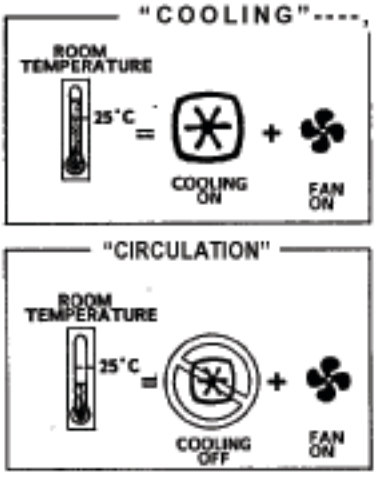

FIG. 10.B

FIG. 10.C

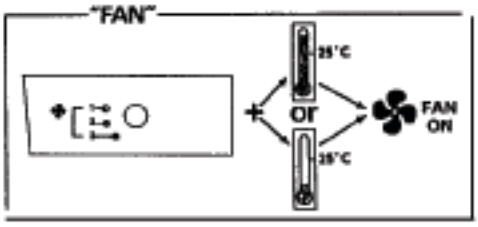

D. HEATING OPERATION

NOTE: This electric heater will not replace a furnace for heating your van in cold weather. It is intended to remove the chill from the air on cool days or mornings only.

1. Set the thermostat to the position which will give your desired comfort level.
2. The selector switch can be set in any of the three heating positions, but normally it will be placed in the Low Heat (1) position for best results.

The electric heater will turn on and off as heating is required to maintain your desired temperature level as set at thermostat.

NOTE: The air conditioner fan runs continuously to circulate the air in the van. It does not come on and off with the heater.

E. POSITION

To shut the air conditioner OFF, place the selector switch in the OFF position, (0).

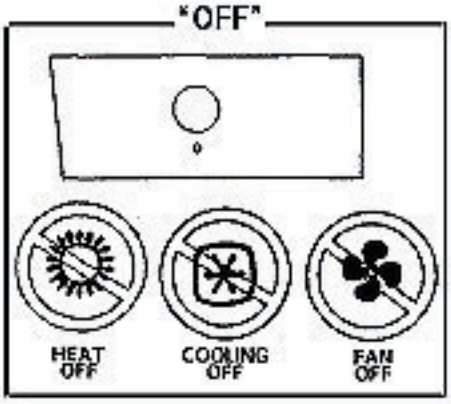

FIG. 10.E.

F. When the air conditioner is turned on and the thermostat calls for cooling, the fan and compressor start at the same time. After shutting the air conditioner down manually by either the selector switch or the thermostat, always wait at least 2 to 3 minutes before turning the air conditioner back on. This allows the refrigerant pressures in the air conditioner to equalize so the compressor may restart.

FIG. 10.D.1

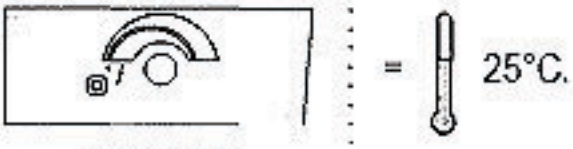

FIG. 10.D.2

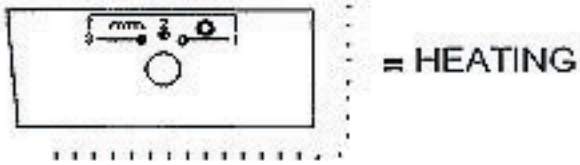

FIG. 10.D.

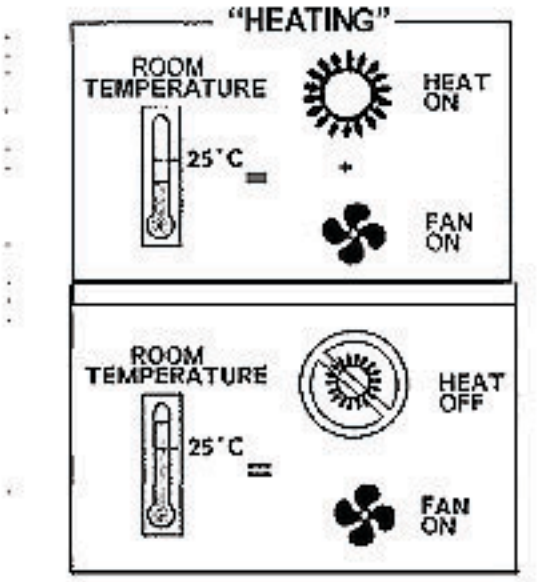

FIG. 10.F.

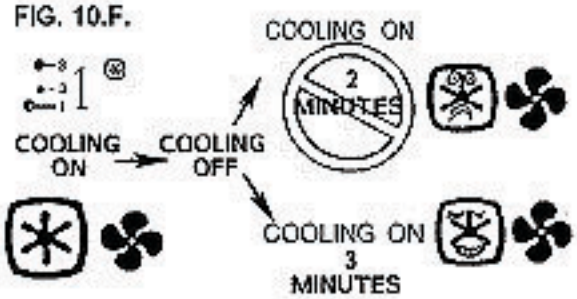

11. MAINTENANCE

AIR FILTERS: Periodically remove the return air filters located above the removable panels in the air box. Wash filters with soap and warm water, let dry and then reinstall (FIG. 9.C)

NOTE: Never run the air conditioner without return air filters in place. This may plug the unit evaporator coil with dirt and may substantially affect the performance of the unit.

FROST FORMATION on Cooling Unit: Under certain conditions, frost may form on the evaporator coil. If this should occur, inspect the filter and clean if dirty. Make sure air louvers are not obstructed. Air conditioners have a greater tendency to frost when the outside temperature is relatively low. This may be prevented by adjusting the thermostat control knob to a warmer setting (counterclockwise). Should frosting continue, operate on low, med., or high FAN setting until the cooling coil is free of frost.

12. SERVICE — Unit Does Not Operate

If your unit fails to operate or operates improperly, check the followina before calling your service center.

A. If the van is connected to a motor generator, check to be sure the motor generator is running and producing power.

B. If the van is connected to a power supply by a land line, check to be sure the line is sized properly to run your air conditioner load and that it is plugged into the power supply.

C. Check your fuse or circuit breaker.

D. In the air conditioner air box, check to be sure the air conditioner conduit is plugged into the selector switch box. (FIG. 8.E)

E. After the above checks, call your local service center for further help. This unit must be serviced by qualified service personnel only.

When calling for service, always give the air conditioner Model Number, Product Number, and Serial Number. This information can be found on the unit rating plate located on the air conditioner base pan. To locate these, remove the return air grill from the air box and look up through the roof opening in the ceiling. (FIG. 2 and 9.A)

AIR CONDITIONER ASSEMBLY

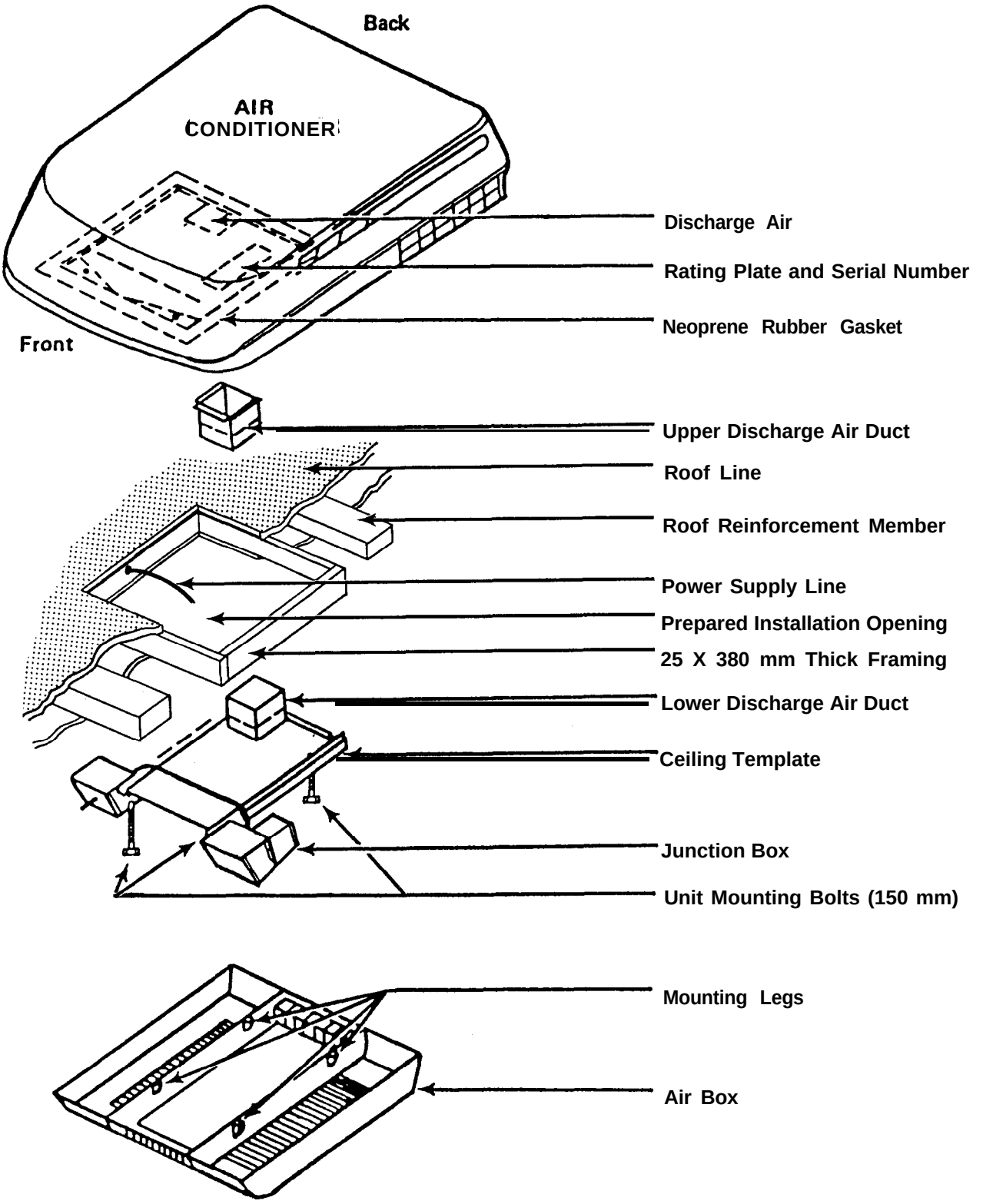
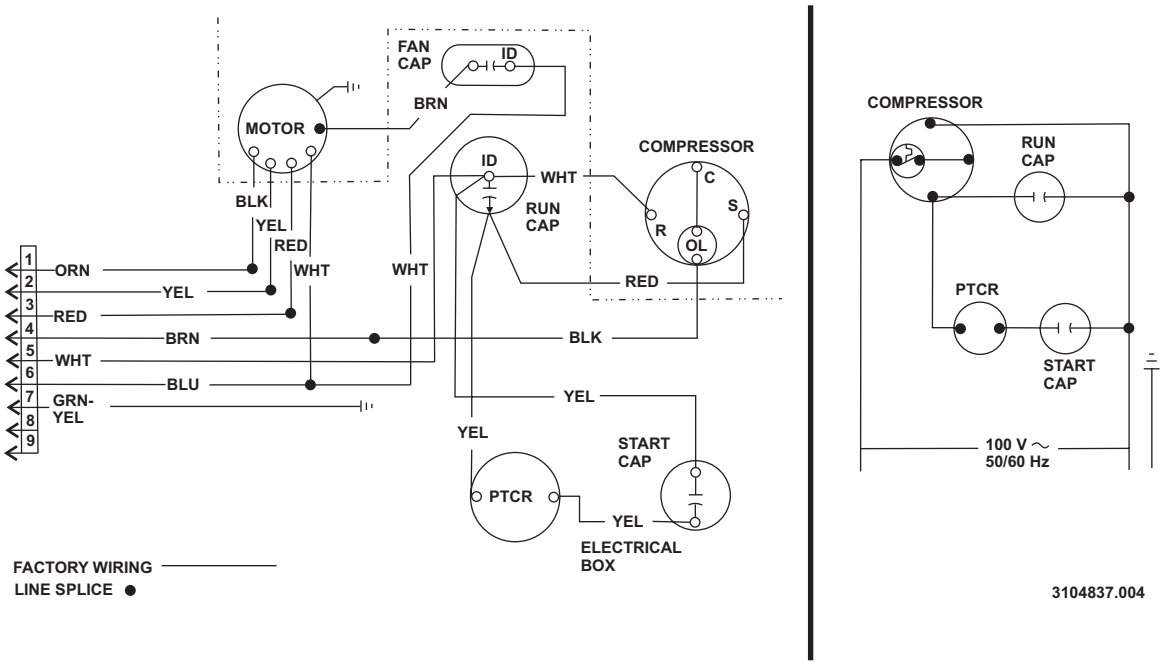
WIRING DIAGRAM