Dometic®

USER MANUAL

RM2351 RM2554 RM2862
RM2354 RM2652 RM3862
RM2451 RM2662 NDR1062
RM2454 RM2663 NDR1292
RM2551 RM2852

REFRIGERATOR FOR LP-GAS & ELECTRIC OPERATION

FOR YOUR SAFETY

If you smell gas:

1. **Open windows.**
2. **Don't touch electrical switches.**
3. **Extinguish any open flame.**
4. **Immediately call your gas supplier.**

POUR VOTRE SÉCURITÉ

Si vous sentez une odeur de gaz:

1. **Ouvrez les fenêtres.**
2. **Ne touchez à aucun interrupteur.**
3. **Éteignez toute flamme nue.**
4. **Avertissez immédiatement votre fournisseur de gaz.**

FOR YOUR SAFETY

Do not store or use gasoline or other flammable vapors and liquids in the vicinity of this or any other appliance.

POUR VOTRE SÉCURITÉ

Ne pas entreposer ni utiliser de l'essence ni d'autres vapeurs ou liquides inflammables à proximité de cet appareil ou de tout autre appareil.

⚠ WARNING

Improper installation, adjustment, alteration, service or maintenance can cause injury or property damage. Refer to this manual. For assistance or additional information consult a qualified installer, service agency or the gas supplier.

⚠ AVERTISSEMENT

Une installation, un réglage, une modification, une réparation ou un entretien non conforme aux normes peut entraîner des blessures ou des dommages matériels. Lisez attentivement le mode d'emploi fourni avec l'appareil. Pour obtenir de l'aide ou des renseignements supplémentaires, consultez un installateur ou un service d'entretien qualifié ou le fournisseur de gaz.

Dometic®

USA
Service Office
Dometic Corporation
2320 Industrial Pkwy.
Elkhart, IN 46516
Phone: 574-294-2511

Corporate Office
2320 Industrial Parkway Elkhart, IN 46515

For Service Center Assistance
Call: 800-544-4881

CANADA
Dometic Corporation
48 Zatonski, Unit 3
Brantford, ON N3T 5L8
CANADA
Phone: 519-720-9578

825125700
MO-M 0633

©2006 Dometic Corporation
LaGrange, IN 46761

INTRODUCTION

Thank you for entrusting us to supply your new quality-guaranteed refrigerator which is designed for storage of foods, frozen foods and for making ice.

The manual describes how to operate and care for the following refrigerator models: RM2351, RM2354, RM2451, RM2454, RM2551, RM2554, RM2652, RM2662, RM2663, RM2852, RM2862, RM3862, NDR1062 and NDR1292. The manual should be kept and stay with the refrigerator if it is ever moved or change owners. Read it carefully to ensure that you know how to operate the refrigerator safely and correctly. Be aware of possible safety hazards when seeing alert symbols on the refrigerator as well as in this manual.

Note that installation and service is only to be performed by qualified personnel. We are not responsible for any failures caused by improper adjustments. For assistance, contact distributor service dept. or service point.

CONTENTS

REFRIGERATOR OVERVIEW 4

OPERATING INSTRUCTIONS 8

STORAGE COMPARTMENTS 9

PRODUCT CARE 11

MAINTENANCE & SERVICE 13

TROUBLESHOOTING 15

APPENDIX A - SPARE PARTS. 16

APPENDIX B - CONSUMER SUPPORT 18

APPENDIX C - DOMETIC WARRANTY & MAINTENANCE SCHEDULE. 19

SYMBOLS

The following symbols are used throughout the manual:

⚠ WARNING	Indicates a potentially hazardous situation, which, if not avoided, could result in death or serious injury.
⚠ CAUTION	Indicates a potentially hazardous situation, which, if not avoided, may result in minor or moderate injury.
CAUTION	Used without the safety alert symbol indicates, a potentially hazardous situation which, if not avoided may result in property damage.
ⓘ	Information
☞	Step-by-step instructions

REFRIGERATOR OVERVIEW

ABSORPTION COOLING SYSTEM

In an absorption refrigerator system, ammonia is liquefied in the finned condenser coil at the top rear of the refrigerator. The liquid ammonia then flows into the evaporator (inside the freezer section) and is exposed to a circulating flow of hydrogen gas, which causes the ammonia to evaporate, creating a cold condition in the freezer.

When starting this refrigerator for the very first time, the cooling cycle may require up to four hours of running time before the cooling unit is fully operational.

The tubing in the evaporator section is specifically sloped to provide a continuous movement of liquid ammonia, flowing downward by gravity through this section.

Sodium chromate is used for corrosion protection (less than 2 weight % of the coolant).

Leveling the refrigerator

Leveling is one of the requirements for proper operation with absorption refrigerators. to ensure proper leveling the vehicle needs to be leveled only so it is comfortable to live in (no noticeable sloping of floor or walls).

Any time the vehicle is parked for several hours with the refrigerator operating, the vehicle should be leveled to prevent this loss of cooling.

If the refrigerator is operated when it is not level and the vehicle is not moving, liquid ammonia will accumulate in sections of the evaporator tubing. This will slow the circulation of hydrogen and ammonia gas, or in severe cases, completely block it, resulting in a loss of cooling.

When the vehicle is moving, the leveling is not critical, as the rolling and pitching movement of the vehicle will pass to either side of level, keeping the liquid ammonia from accumulating in the evaporator tubing.

AUTOMATIC ENERGY SELECTOR SYSTEM

The refrigerator is equipped with an automatic energy selector system. The user turns the refrigerator on and then, the refrigerator automatically selects the most suitable energy source available, either 120 V AC or LP gas operation. The system can be set by the user to be fully automatic (AUTO mode is selected) or to operate on LP gas only (AUTO mode is off).

On 3-way models, the control system can manually be set to DC mode (DC operation). The DC mode overrides all other operating modes.

The refrigerator controls will work down to 9.6 V DC.

MODES OF OPERATION

AUTO mode - AES/AUTO mode

When operating in AUTO - AES/AUTO mode, the AUTO - AES/AUTO mode indicator lamp is illuminated. The control system will automatically select between AC and GAS operation. AC has priority over GAS. Should AC become unavailable, the system automatically switches to GAS. As soon as AC becomes available again, the control will switch back to AC regardless of the status of the GAS operation.

If the CHECK indicator lamp is illuminated the controls have failed to ignite the burner in the GAS mode. To restart an ignition attempt with the CHECK lamp illuminated (or to turn off the CHECK lamp), press the ON/OFF button OFF and back ON again. The control system activates the ignition system and makes three attempts to light the burner for a period of approx. 45 sec. at two minutes interval. Should 120 V AC become available while the CHECK indicator lamp is on, the CHECK lamp will *not* turn off until the ON/OFF button is pressed OFF and then ON again.

GAS mode

The GAS mode indictor lamp is illuminated. This mode provides LP gas only. The control system activates the ignition system and attempts to light the burner for a period of approx. 45 sec. at two minutes interval. If unsuccessful, the CHECK indicator lamp will illuminate.

To restart GAS operation, press the ON/OFF button to OFF and then back ON. The control system attempts a new ignition sequence.

Purging air from the lines

If the refrigerator has not been used for a long time - or - the LP tanks have just been refilled, air may be trapped in the supply lines. Purge the air from the lines by pressing the ON/OFF button to OFF and then back ON 3 to 4 times. If repeated attempts fail to start the LP gas operation, check to make sure that the LP gas supply tanks are not empty and that all manual shutoff valves in the lines are open. Do not continue to reset GAS operation if the CHECK indicator lamp continues to be illuminated after several tries. If the problem persists, please contact a service center for assistance.

⚠ WARNING

FIRE OR EXPLOSION HAZARD. When refueling or parked near gasoline pumps, shut off all LP gas appliances. Failure to heed this warning could cause a fire or explosion resulting in death or severe personal injury.

DC mode

RM2354-2454-2554-2663

When operating in DC mode (3-way models only), the DC mode indicator lamp is illuminated and all other lamps are off. To select another operating mode, turn off the DC mode by pressing the DC selector button. The DC lamp is turned off.

When there is no charging of the house battery, switch to AUTO mode or GAS mode since running the refrigerator on 12 V DC will quickly drain the battery.

LIMP MODE OF OPERATION

In the event of a failure of a major operating component, the control system will continue to operate the cooling system.

RM2351-2451-2551-2652-2852

If the control can not read the temperature sensor and control the preset temperature, the control will run the cooling unit continuously at the energy source available. The refrigerator will continue to operate in this mode indefinitely - or - until a new sensor is installed and the system reset.

RM2354-2454-2554-2662-2663-2862-3862, NDR1062 & NDR1292

Two modes of operation can occur:

1) The first limp mode of operation will execute if the display module becomes non functional. The control system reverts to full automatic operation selecting the best energy source available with AC, DC (3-way only) and GAS priority. The temperature setting is maintained at the mid position. The power module will continually attempt to reestablish operation of the display module.
2) The second limp mode of operation will execute when a failure of the temperature sensing device or associated electronic circuitry occurs. If this should happen, the control system operates on the energy source selected via the control panel. The cooling unit runs continuously on the selected energy source. The refrigerator continues to operate in this mode indefinitely or until a new sensor is installed and the system is reset.

CLIMATE CONTROL SYSTEM

RM2652-2662-2663-2852-2862-3862, NDR1062 & NDR1292

During the summer months of high temperatures and humidity, the metal frame between the freezer and fresh food compartments may have water droplets forming. The number of water droplets will increase if the vehicle is not air conditioned during these months. The refrigerator comes standard with a 12 V DC climate control that will evaporate the water droplets when they form. The climate control can be left on continuously or used only when temperatures require it. Note that when turned on, the climate control will draw 12 V DC power continuously. Turn it off when a charging source is not available.

LOW AMBIENT CONTROL

RM3862, NDR1062 & NDR1292

The refrigerator is equipped with an exclusive feature that allows for trouble-free operation in low ambient temperature (like below 50°F) for extended periods of time. Once the outdoor temperature is above 50°F, the low ambient switch should be turned off.

THERMOSTAT

RM2354-2662-2663-2862-3862, NDR1062 & NDR1292

The thermostat controls both the gas and electric operation, thereby eliminating the necessity of resetting each time a different energy source is employed. After the initial start-up, the thermostat should be adjusted to the desired temperature setting.

REFRIGERATOR OVERVIEW

CONTROL PANEL

RM2351-2451-2551-2652-2852

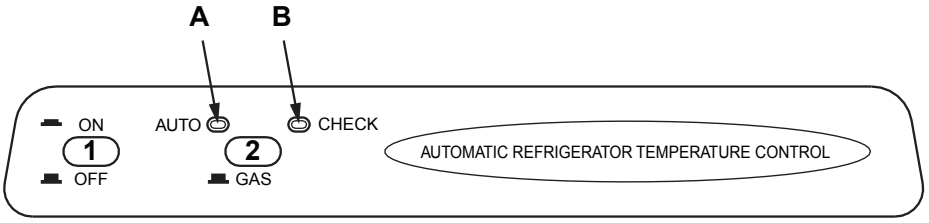

1. **ON/OFF** main power button
2. **AUTO/GAS** mode selector button

A. **AUTO** mode indicator lamp
B. **CHECK** indicator lamp (GAS mode only)

RM2354-2454-2554-2663

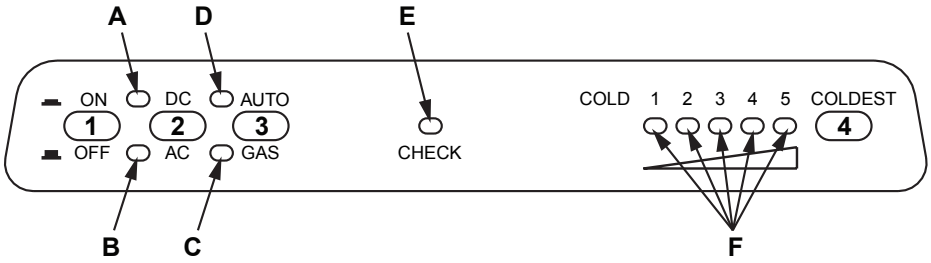

1. **ON/OFF** main power button
2. **DC** mode selector button
3. **AUTO/GAS** mode selector button
4. **Temperature** selector button

A. **DC** mode indicator lamp
B. **AC** mode indicator lamp
C. **GAS** mode indicator lamp
D. **AUTO** mode indicator lamp
E. **CHECK** indicator lamp (GAS mode only)
F. **Temperature** indicator lamps

RM2662-2862 & NDR1062

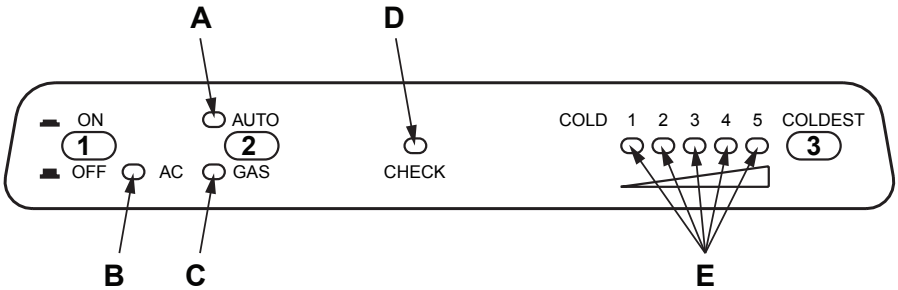

1. **ON/OFF** main power button
2. **AUTO/GAS** mode selector button
3. **Temperature** selector button

A. **AUTO** mode indicator lamp
B. **AC** mode indicator lamp
C. **GAS** mode indicator lamp
D. **CHECK** indicator lamp
E. **Temperature** indicator lamps

REFRIGERATOR OVERVIEW

RM3862, NDR1062 & NDR1292

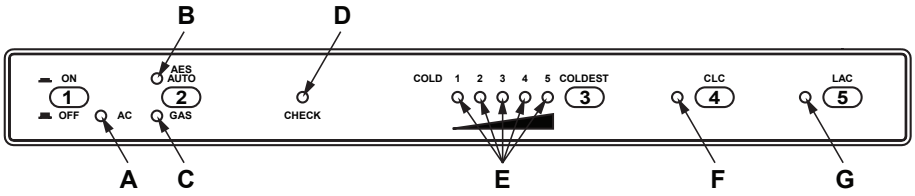

1. **ON/OFF** main power button
2. **AES/AUTO/GAS** mode selector button
3. **Temperature** selector button
4. **Climate control** button
5. **Low ambient control** button

A. **AC** mode indicator lamp
B. **AES/AUTO** mode indicator lamp
C. **GAS** mode indicator lamp
D. **CHECK** indicator lamp
E. **Temperature** indicator lamps
F. **Climate control** indicator lamp
G. **Low ambient control** indicator lamp

NDR1292

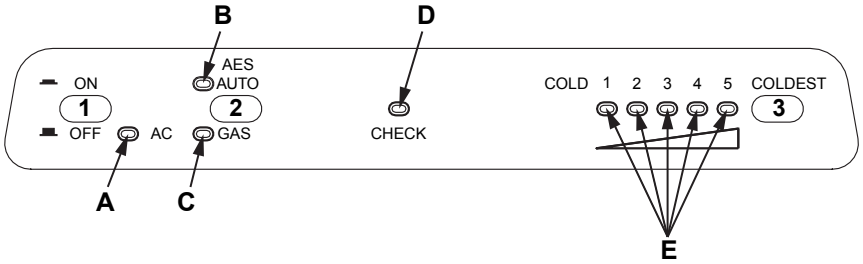

1. **ON/OFF** main power button
2. **AES/AUTO/GAS** mode selector button
3. **Temperature** selector button

A. **AC** mode indicator lamp
B. **AES/GAS** mode indicator lamp
C. **GAS** mode indicator lamp
D. **CHECK** indicator lamp
E. **Temperature** indicator lamps

OPERATING INSTRUCTIONS

STARTUP

⚠ WARNING

FIRE HAZARD. Before lighting the gas burner, after that the RV has not been used for some time, please check that the gas path between the burner jet and the burner tube has not been obstructed. Failure to heed this warning could cause a fire resulting in personal injury.

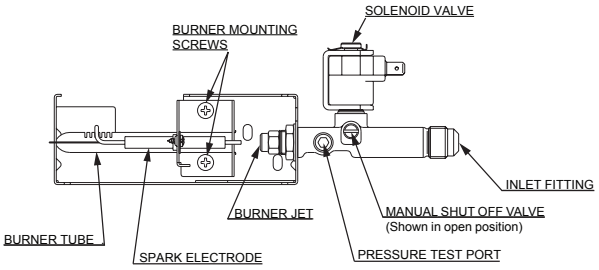

Before starting the refrigerator:

- Check that all the manual gas valves are in the ON position. This includes the manual shutoff valve at the rear of the refrigerator.
- Make sure that a continuous 12V DC supply is available for the electronic control to function.

To start the refrigerator:

1. Press the ON/OFF button.
2. Select operation mode:
   - **AUTO - AES/AUTO mode**
     AC and GAS.
     Press the AUTO/GAS - AES/AUTO/GAS mode selector button (if not already on). The illuminated lamp indicates the selected mode.
     (If the CHECK indicator lamp is illuminated, see REFRIGERATOR OVERVIEW > MODES OF OPERATION > AUTO MODE - AES/AUTO MODE for further information.)
   - **GAS mode**
     GAS operation only.
     Press the AUTO/GAS - AES/AUTO/GAS mode selector button to turn off the AUTO mode (if not already off).
     (Within 45 seconds the burner should be ignited and operating normally. If not, see REFRIGERATOR OVERVIEW > MODES OF OPERATION > GAS MODE for further information.)
   - **DC mode** (3-way models only)
     Press the DC mode indicator button. The DC lamp will be turned on. To select AUTO or GAS mode, turn off the DC mode by pressing the DC mode selector button. The DC lamp will then be turned off.
3. If necessary, adjust the thermostat by pressing the Temperature selector button.
   (**RM2351-2451-2551-2652-2852:** The temperature is controlled by a factory preset temperature setting.)

TURNING ON THE CLIMATE CONTROL

RM2652-2662-2663-2852-2862, NDR1062 & NDR1292

Turn the Climate control switch to I (ON).

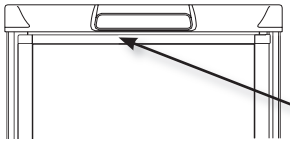

The Climate control switch is located beneath the top decoration panel that houses the control panel.

RM3862, NDR1062 & NDR1292

Press the CLC button. The indicator lamp will illuminate.

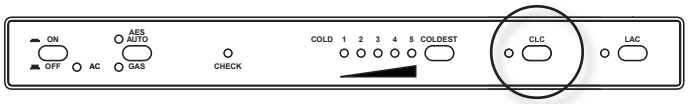

TURNING ON THE LOW AMBIENT CONTROL

NDR1062 & NDR1292

Turn the Low ambient control switch to I (ON).

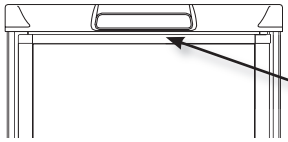

The Low ambient control switch is located beneath the top decoration panel that houses the control panel.

RM3862, NDR1062 & NDR1292

Press the LAC button. The indicator lamp will illuminate.

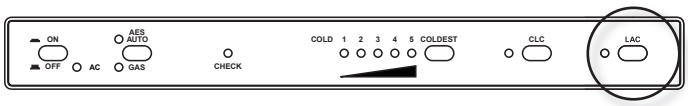

TURNING OFF THE REFRIGERATOR

The refrigerator may be shut off while in any mode of operation by pressing the main power ON/OFF button to the OFF position. This shuts off all DC power to the refrigerator, including the interior light.

If the refrigerator will not be in operation for a period of weeks, it should be emptied, defrosted, cleaned and the doors left ajar. The ice trays should also be dried and kept outside the cabinet.

STORAGE COMPARTMENTS

⚠ WARNING

EXPLOSION HAZARD. Never store explosive substances in the refrigerator, such as cigarette lighter fuel, gasoline, ether or the like. Failure to heed this warning could cause an explosion resulting in death or severe personal injury.

REFRIGERATOR VOLUME

MODEL	TOTAL REFRIGERATED VOLUME (cu.ft)
RM2351-2354	3
RM2451-2454	4
RM2551-2554	5
RM2652-2662-2663	6
RM2852-2862-3862	8
NDR1062	9.2
NDR1292	12

FOOD STORAGE COMPARTMENT

The food storage compartment is completely closed and unventilated, which is necessary to maintain the required low temperature for food storage. Consequently, foods having a strong odor or those that absorb odors easily should be covered. Vegetables, salads etc. should be covered to retain their crispness.

The coldest positions in the refrigerator are under the cooling fins and at the bottom of the refrigerator. The warmer areas are on the upper door shelves. This should be considered when placing different types of food in the refrigerator.

Arrange all food in the unit to allow for free air circulation. Do not overpack because a stuffed refrigerator must work harder and will have higher cabinet temperatures.

Never put hot food or drinks into the refrigerator - cool them first.

Do not leave the unit's door open any longer than necessary. This will reduce frost formation and increase the efficiency of the refrigerator.

FROZEN FOOD STORAGE COMPARTMENT

This compartment is not designed for deep or quick freezing of food. To prevent food from drying out, keep it in covered dishes, containers, plastic bags or wrapped in aluminum foil.

- Quick frozen soft fruits and ice cream should be placed in the coldest part of the compartment, which is at the bottom of the aluminum liner.
- Frozen vegetables, may be stored in any part of the compartment.
- Meat or fish, whether raw or prepared, can be stored in the frozen food storage compartment provided they are pre-cooled first in the refrigerator. They can be stored about three times longer in the frozen food compartment as compared to the fresh food compartment.

Ice cubes

Ice cubes can be made in the freezer compartment. For faster ice making, the trays should be placed in direct contact with the bottom of the freezer compartment.

RM2351-2454-2554-2662-2663-2862-3862, NDR1062 & NDR1292

Ice will be made more rapidly if the thermostat is set at its highest position, but be sure to move the thermostat back to normal setting when the ice is formed; the refrigerator might otherwise become too cold.

STORAGE COMPARTMENTS

REMOVING AND REPLACING THE SHELVES

1

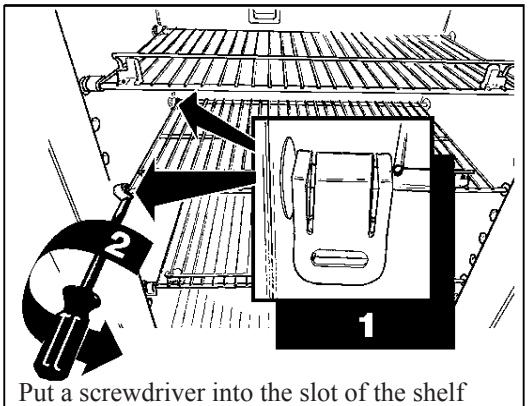

Put a screwdriver into the slot of the shelf lock. Turn the screwdriver counter clockwise. Remove the shelf locks from the wire shelf.

2

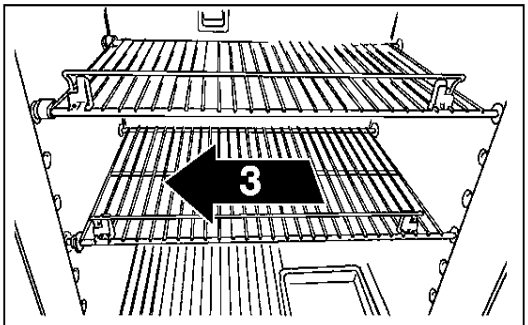

Slide the wire shelf to the left.
The right-hand side of the shelf will come loose.

3

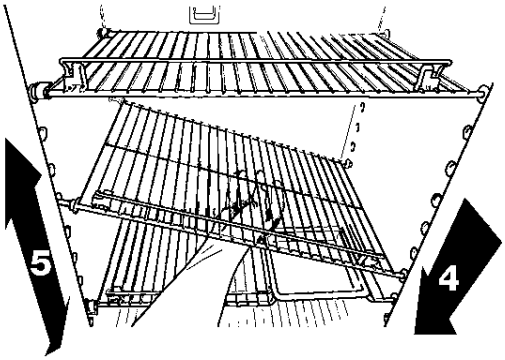

Lower the right-hand side of the wire shelf and let the left-hand side slide out of the holes in the wall.

4

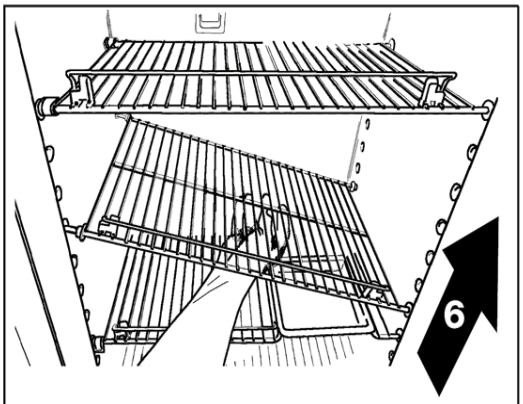

Insert the ends of the wire shelf on the left-hand side at the desired position.

5

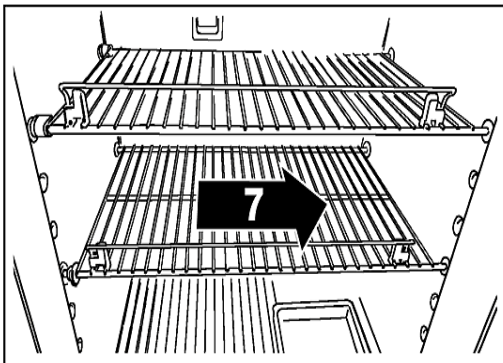

Slide the shelf into the holes on the right-hand side.

6

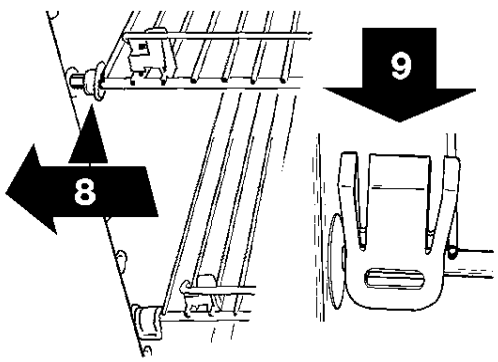

Slide the plastic plugs into the holes of the wall. Snap the shelf locks onto the wire shelf.

PRODUCT CARE

DEFROSTING

1. Shut off the refrigerator. (Press the ON/OFF button to the OFF position.)
2. Empty the refrigerator.
3. Leave the cabinet and freezer doors open and place the drip tray under the finned evaporator.
   Defrosting time can be reduced by filling the ice trays with hot water and placing them in the freezer compartment.

CAUTION

Do not use:
- **A knife or an ice pick, or other sharp tools to remove frost from the freezer shelves. It can create a leak in the ammonia system.**
- **A hot air blower. Permanent damage could result from warping the metal or plastic parts.**

4. When all the frost has melted, dry the interior with a clean cloth and put the food back.
5. Turn the refrigerator back on.

REPLACING THE HALOGEN LAMP

RM3862 & NDR1062

⚠ CAUTION

Before replacing the lamp, turn off the refrigerator. Wear gloves as protection against hot lamp, broken glass as protection of the new lamp.

The lamp is located at the top of the refrigerator compartment.

To replace the lamp, follow these steps:

1. Remove the lamp cover.
2. Wearing gloves, pull out the lamp from socket. Replace it with a new 12V, 10W halogen lamp base G4.
3. Put back the lamp cover.

CLEANING

Always keep the refrigerator clean. Cleaning the refrigerator is usually done after it is defrosted or put into storage. Use lukewarm weak soda solution to clean the interior liner of the refrigerator. Use warm water only to clean the finned evaporator, gasket, ice tray and shelves. Do not spray liquids near electrical outlets, connections or the refrigerator components.

CAUTION

Never use strong chemicals or abrasives to clean these parts, as the protective surfaces will be damaged.

To keep the refrigerator operating efficiently and safely, periodic inspection and cleaning of several components once or twice a year is recommended:

- Check the lower vent, upper vent and area between these openings for any obstructions such as bird/insect nests, spider webs, etc.
- Make sure the refrigerator area is free from combustible material, gasoline and other flammable vapors or liquids.
- Clean the coils on the back of the refrigerator. Use a soft bristled brush to dust off the coils.

AIRING POSITION CARD

RM2652-2662-2663-2852-2862

Use the **Airing Position Card** to keep the doors ajar if the refrigerator will not be in use for an extended period of time or put in storage.

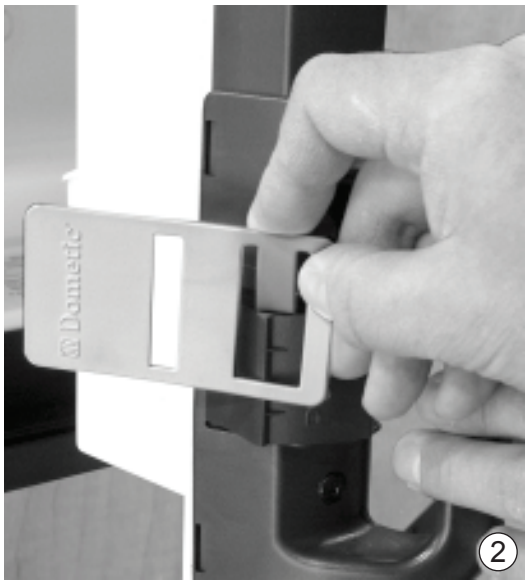

MAINTENANCE & SERVICE

To keep the refrigerator working properly, a qualified service technician should, at least once a year, inspect the connections, the control system, the LP gas pressure and flue baffle. The service and maintenance described in this section is to be performed by service personnel only.

ELECTRIC EQUIPMENT

Heater

The heat necessary for the operation of an absorption cooling unit is supplied by an electric heater mounted in a pocket of the boiler system.

2-way models are equipped with *one* electrical heater for 120 V AC.
3-way models are equipped with *two* electrical heaters - one for 120V AC and one for 12V DC.

Replacing the heater

To replace the heater, follow these steps:

1. Turn off the refrigerator.
2. Unplug the power cord and disconnect the 12V DC power.
3. Remove the power module cover.
4. Disconnect the heater leads.
5. With a pair of pliers, unfold the lug holding the lid of the boiler casing. Open the lid.
6. Remove some insulation wool for the heater to be accessible.
7. Turn and lift the heater out of its pocket.
8. Fit the new heater into the pocket.
9. Connect the leads and refit the power module cover.
10. Put back the insulation wool.
11. Close the lid of the boiler.

Fuses

2-way models are equipped with 2 fuses - one for the refrigerator control system and one for the AC heater.

3-way models are equipped with 3 fuses - two fuses in the power module and one in-line blade fuse.

Control system	3 A
AC heater	5 A
12 V DC heater	30 A

Replacing the fuses

To replace the fuses, follow these steps:

1. Turn off the refrigerator.
2. Unplug the power cord and disconnect the 12V wires.
3. Remove the power module cover.
4. Snap the fuse out of the fuse holder.
5. Fit the new fuse in to the fuse holder.
6. Put back the power module cover.

PERIODIC MAINTENANCE

Checking the control system

Check the control system by connecting/disconnecting the 120V AC power, starting/stopping the engine, etc.

Checking the connections

1. Check all connections in the LP gas system (at the back of the refrigerator) for gas leaks. The LP gas supply must be turned on.
2. Apply a non-corrosive bubble solution to all LP gas connections. The appearance of bubbles indicates a leak and should be repaired *immediately* by a qualified serviceman.

⚠ WARNING

EXPLOSION HAZARD. Never use an open flame to check for gas leaks. Failure to heed this warning could cause an explosion resulting in death or severe personal injury.

Checking the LP gas pressure

The LP gas pressure should be checked and the main regulator readjusted if pressure is incorrect. The correct operating pressure is 11 inches of water column. Measure the LP gas pressure at the test port, just ahead of the burner jet.

Gas equipment assembly

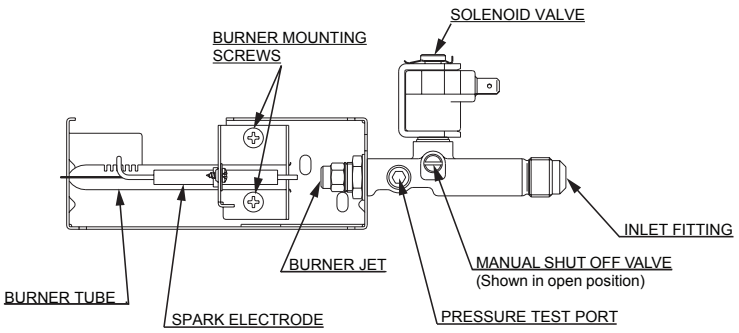

Cleaning the flue and burner

Inspect the flue baffle. It should be reasonably clean and free of soot. Heavy soot formation indicates improper functioning of the burner.

To clean the flue and burner, follow these steps:

1. Unplug the refrigerator power cord from the 120V AC outlet.
2. Disconnect/shut off the 12V DC power to the refrigerator.
3. Turn the manual shutoff valve to OFF.
4. In turn, remove the:
   - Cover from the burner housing.
   - Burner mounting screw and burner assembly.
   - Wire and flue baffle from the top of flue tube.
5. Using a flue brush, clean the flue from the top. Blowing compressed air into the flue will not properly clean soot and scale out of the flue tube.
6. Replace the flue baffle.
7. Clean the burner tube with a brush. Blow out the burner with compressed air.

⚠ WARNING

FIRE HAZARD. Do not use a wire or pin when cleaning the burner jet as damage can occur to the precision opening. Failure to heed this warning could cause fire resulting in personal injury.

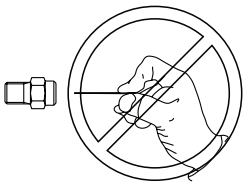

8. Carefully reinstall the burner. Make sure the end of the burner fits into the slot on the burner bracket, that the slots are centered under the flue tube and that the thermocouple is positioned properly (tip of thermocouple extends over two slots of the burner).
9. Check the burner flame for proper appearance. The flame should be light blue. If it has a yellow tip, it means that it is burning incorrectly.

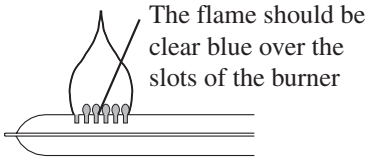

10. Check the electrode for proper location and gap.

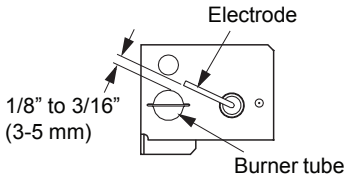

11. Turn on the manual gas shutoff valve. Check all fittings for leaks with soapy water.
12. Connect the 120V power cord to the outlet. Reconnect/turn on the 12V DC power.
13. Check the LP gas safety shutoff.

TROUBLESHOOTING

If you run into a problem, refer to the troubleshooting table below.

Symptom	Check/Remedial action
Refrigerator or freezer is not cold enough	• Is the plug firmly connected to the socket? Is the socket switched on? Check the socket by plugging in another appliance. • Defective fuse? Fit a new fuse. • For refrigerators equipped with thermostat - check if it is properly set. • Is the refrigerator level? Because of its operation it is important to keep an absorption refrigerator level. • Heavy frost build-up on evaporator fins? To prevent frost buildup, which can reduce efficiency, do not leave the unit's door open longer than necessary. • Has the overheating protection been triggered or not? (Must be checked by a qualified service technician.) • Is there a power failure? Are the fuses are intact for the AC supply and control system? • Has the door been closed properly causing the inside temperature to rise to quickly? • Overpacked refrigerator? The unit will have to work harder if the refrigerator is stuffed and results in higher cabinet temperatures. Arrange the food in the unit to allow for free air circulation. • Is the burner dirty, damaged or not properly located under the flue tube? • Is the burner jet clogged? • Is the flue baffle inserted properly in the flue tube? • Is the LP gas pressure low at burner? Set the main regulator to regulate the pressure so it does not drop below 11 inches water column at pressure tap.
Odors from fumes:	• Dislocated burner • Damaged burner • Dirty flue tube
The refrigerator does not work in gas operation mode	• Gas bottle empty? Change the gas bottle • Air in the gas pipe? Remove the air by switching the refrigerator on and off 3-4 times.

The refrigerator is quality-guaranteed but we are not responsible for any failures caused by improper adjustments. If the refrigerator is still not working properly, contact your nearest Service Center. State the problem, model, product- and serial-number. These details are stated on the data label inside the compartment.

APPENDIX A - SPARE PARTS

The following table displays commonly used parts which should be available from your Dometic Service Center.

MODEL / SPARE PARTS	RM2351	RM2354	RM2451	RM2454	RM2551	RM2554	RM2652
Airing position card	N.A.	N.A.	N.A.	N.A.	N.A.	N.A.	3850781-01
Baffle	2007172-02/2	2007172-02/2	2932667-01/3	2932667-01/3	2932667-02/1	2932667-02/1	2932667-03/9
Bottle holder, 2 pieces	N.A.	N.A.	N.A.	N.A.	N.A.	N.A.	N.A.
Box	2932636-01/8	2932636-01/8	N.A.	N.A.	N.A.	N.A.	N.A.
Box vegetable	N.A.	N.A.	N.A.	N.A.	2932621-01/0	2932621-01/0	2932621-01/0
Box vegetable (crisper)	N.A.	N.A.	N.A.	N.A.	N.A.	N.A.	N.A.
Box vegetable (crisper)	N.A.	N.A.	N.A.	N.A.	N.A.	N.A.	N.A.
Box vegetable (crisper), 2 pieces	N.A.	N.A.	N.A.	N.A.	N.A.	N.A.	N.A.
Box vegetable (meat locker)	N.A.	N.A.	N.A.	N.A.	N.A.	N.A.	N.A.
Burner (with conductor)	2930697-07/9	2930697-07/9	2930697-06/1	2930697-06/1	2930697-06/1	2930697-06/1	2930697-07/9
Door reversing kit, (light brown)	3850304-01/9	3850304-01/9	N.A.	N.A.	N.A.	N.A.	N.A.
Door reversing kit, (black)	3850304-02/7	3850304-02/7	N.A.	N.A.	N.A.	N.A.	N.A.
Door reversing kit, right-left (light brown)	N.A.	N.A.	2932750-02/5	2932750-02/5	2932750-02/5	2932750-02/5	2932750-08/2
Door reversing kit, left-right (light brown)	N.A.	N.A.	2932750-03/3	2932750-03/3	2932750-03/3	2932750-03/3	2932750-09/0
Door reversing kit, right-left (black)	N.A.	N.A.	2932750-13/2	2932750-13/2	2932750-13/2	2932750-13/2	2932750-11/6
Door reversing kit, left-right (black)	N.A.	N.A.	2932750-14/0	2932750-14/0	2932750-14/0	2932750-14/0	2932750-12/4
Door shelf, lower	N.A.	N.A.	2932575-01/8	2932575-01/8	2932575-01/8	2932575-01/8	2932575-01/8
Door shelf, 2 pieces	N.A.	N.A.	2932576-01/6	2932576-01/6	N.A.	N.A.	2932576-01/6
Door shelf, 3 pieces	2002261-24/2	2002261-24/2	N.A.	N.A.	2932576-01/6	2932576-01/6	N.A.
Door shelf, freezer	N.A.	N.A.	N.A.	N.A.	N.A.	N.A.	2932577-01/4
Door shelf, 6 pieces	N.A.	N.A.	N.A.	N.A.	N.A.	N.A.	N.A.
Electrode	2932781-01/2	2932781-01/2	2932781-01/2	2932781-01/2	2932781-01/2	2932781-01/2	2932781-01/2
Halogen lamp (12V, 10W base G4)	N.A.	N.A.	N.A.	N.A.	N.A.	N.A.	N.A.
Handle (light brown)	N.A.	N.A.	2932670-01/7	2932670-01/7	2932670-01/7	2932670-01/7	2932093-01/2
Handle (black)	N.A.	N.A.	2932670-02/5	2932670-02/5	2932670-02/5	2932670-02/5	2932093-03/8
Heater 175W, 12V	N.A.	3850646-05/4	N.A.	3850646-05/4	N.A.	3850646-05/4	N.A.
Heater 175W, 120V	3850644-45/5	3850644-45/5	3850644-45/5	3850644-45/5	3850644-45/5	3850644-45/5	N.A.
Heater 275W, 12V	N.A.	N.A.	N.A.	N.A.	N.A.	N.A.	N.A.
Heater 325W, 120V	N.A.	N.A.	N.A.	N.A.	N.A.	N.A.	3850644-42/2
Heater 420W, 120V (2 x 60V, 201W)	N.A.	N.A.	N.A.	N.A.	N.A.	N.A.	N.A.
Jet, No. 39	2007419-15/9	2007419-15/9	N.A.	N.A.	N.A.	N.A.	N.A.
Jet, No. 43	N.A.	N.A.	2007419-16/7	2007419-16/7	2007419-16/7	2007419-16/7	N.A.
Jet, No. 58	N.A.	N.A.	N.A.	N.A.	N.A.	N.A.	2007419-21/7
Jet, No. 76	N.A.	N.A.	N.A.	N.A.	N.A.	N.A.	N.A.
Lamp cover	N.A.	N.A.	N.A.	N.A.	N.A.	N.A.	2932106-01/2

APPENDIX A - SPARE PARTS

MODEL / SPARE PARTS	RM2662	RM2663	RM2852	RM2862	RM3862	NDR1062	NDR1292
Airing position card	3850781-01	3850781-01	3850781-01	3850781-01	N.A.	N.A.	N.A.
Baffle	2932667-03/9	2932667-03/9	2932667-04/7	2932667-04/7	2932667-04/7	2932667-04/7	2932667-05/4
Bottle holder, 2 pieces	N.A.	N.A.	N.A.	N.A.	N.A.	N.A.	2932658-01/2
Box	N.A.	N.A.	N.A.	N.A.	N.A.	N.A.	N.A.
Box vegetable	2932621-07/7	2932621-07/7	2932621-01/0	2932621-07/7	2932621-09/3	N.A.	N.A.
Box vegetable (crisper)	N.A.	N.A.	N.A.	N.A.	N.A.	N.A.	2002726-12/9
Box vegetable (crisper)	N.A.	N.A.	N.A.	N.A.	N.A.	N.A.	2002726-13/7
Box vegetable (crisper), 2 pieces	N.A.	N.A.	N.A.	N.A.	N.A.	2002726-17/8	N.A.
Box vegetable (meat locker)	N.A.	N.A.	N.A.	N.A.	N.A.	2932621-08/5	2002726-14/5
Burner (with conductor)	2930697-07/9	2930697-07/9	2930697-07/9	2930697-07/9	2930697-07/9	2930697-07/9	2930697-07/9
Door reversing kit, (light brown)	N.A.	N.A.	N.A.	N.A.	N.A.	N.A.	N.A.
Door reversing kit, (black)	N.A.	N.A.	N.A.	N.A.	N.A.	N.A.	N.A.
Door reversing kit, right-left (light brown)	N.A.	N.A.	2932750-08/2	N.A.	N.A.	N.A.	N.A.
Door reversing kit, left-right (light brown)	N.A.	N.A.	2932750-09/0	N.A.	N.A.	N.A.	N.A.
Door reversing kit, right-left (black)	2932750-11/6	2932750-11/6	2932750-11/6	2932750-11/6	N.A.	2932750-11/6	N.A.
Door reversing kit, left-right (black)	2932750-12/4	2932750-12/4	2932750-12/4	2932750-12/4	N.A.	2932750-12/4	N.A.
Door shelf, lower	2932575-05/9	2932575-05/9	2932575-01/8	2932575-05/9	2932575-06/7	2932575-07/5	N.A.
Door shelf, 2 pieces	2932576-06/5	2932576-06/5	N.A.	N.A.	N.A.	N.A.	N.A.
Door shelf, 3 pieces	N.A.	N.A.	2932576-01/6	2932576-06/5	2932576-07/3	2932576-08/1	N.A.
Door shelf, freezer	N.A.	N.A.	2932577-01/4	N.A.	N.A.	N.A.	2932577-02/2
Door shelf, 6 pieces	N.A.	N.A.	N.A.	N.A.	N.A.	N.A.	2932583-03/8
Electrode	2932781-01/2	2932781-01/2	2932781-01/2	2932781-01/2	2932781-01/2	2932781-01/2	2932781-02/0
Halogen lamp (12V, 10W base G4)	N.A.	N.A.	N.A.	N.A.	3850455-01/9	3850455-01/9	N.A.
Handle (light brown)	N.A.	N.A.	N.A.	N.A.	N.A.	N.A.	N.A.
Handle (black)	2932093-03/8	2932093-03/8	2932093-03/8	2932093-03/8	N.A.	2932094-04/4	N.A.
Heater 175W, 12V	N.A.	N.A.	N.A.	N.A.	N.A.	N.A.	N.A.
Heater 175W, 120V	N.A.	N.A.	N.A.	N.A.	N.A.	N.A.	N.A.
Heater 275W, 12V	N.A.	3850646-03/9	N.A.	N.A.	N.A.	N.A.	N.A.
Heater 325W, 120V	3850644-42/2	3850644-42/2	3850644-42/2	3850644-42/2	3850644-42/2	3850644-42/2	N.A.
Heater 420W, 120V (2 x 60V, 210W)	N.A.	N.A.	N.A.	N.A.	N.A.	N.A.	3850644-46/3
Jet, No. 39	N.A.	N.A.	N.A.	N.A.	N.A.	N.A.	N.A.
Jet, No. 43	N.A.	N.A.	N.A.	N.A.	N.A.	N.A.	N.A.
Jet, No. 58	2007419-21/7	2007419-21/7	2007419-21/7	2007419-21/7	2007419-21/7	2007419-21/7	N.A.
Jet, No. 76	N.A.	N.A.	N.A.	N.A.	N.A.	N.A.	2007419-33/2
Lamp cover	2932106-01/2	2932106-01/2	2932106-01/2	2932106-01/2	3850532-01/5	3850532-01/5	2932106-01/2

APPENDIX B - CONSUMER SUPPORT

Dometic website www.dometicusa.com

Please visit the website for information and news about Dometic products. You can obtain information about how to get in contact, learn about product care, download manuals, leaflets and warranties.

Service and spare parts

For service, please contact the Service Center Assistance, see the front page of this manual - or - visit the Dometic website to find the location of the nearest Dometic Service Center.

Commonly used spare parts are listed in this manual, see APPENDIX A - SPARE PARTS. These should be available from your Dometic Service Center.

Contact us

For contact information, please see the frontpage of this manual - or - visit the Dometic website.

Register the appliance www.edometic.com

Timely registration will allow for enhanced communication and service under the terms of the warranty, see APPENDIX C - DOMETIC WARRANTY & MAINTENANCE SCHEDULE.
To register the appliance, fill in the pre-printed registration card on the last page of this manual or register on-line at the Dometic website www.edometic.com.

To register on-line, follow these steps:

1. At www.edometic.com, click Warranty Registration.

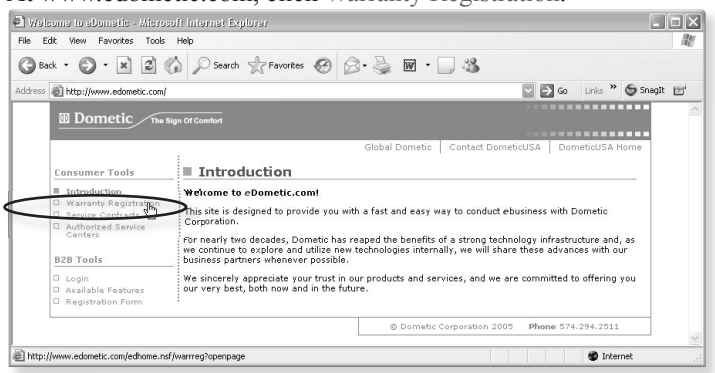

2. Click Register your new Dometic product here.

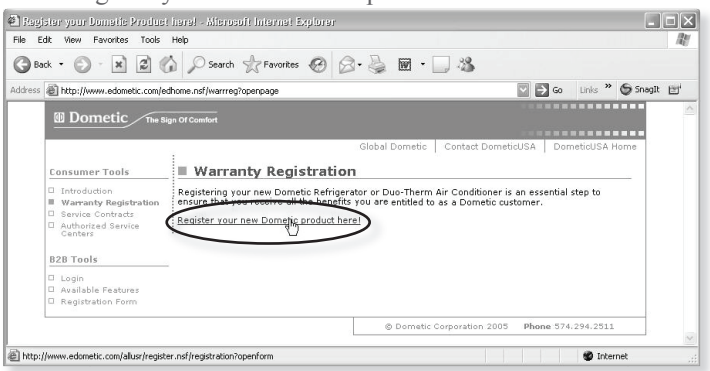

3. Complete the information and then, click the Submit Registration button.

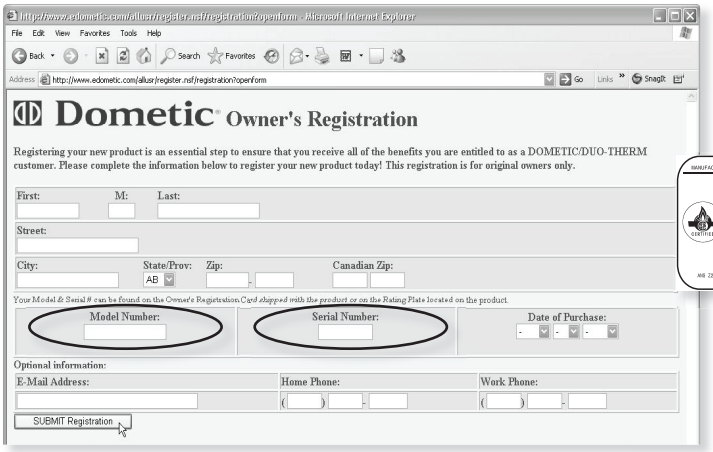

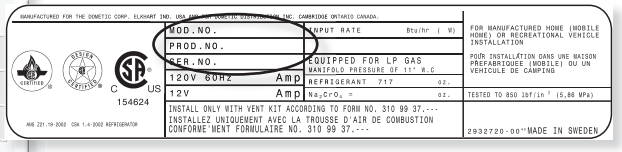

The model number (e.g. RM3762) and serial number (e.g. 012 34567) are stated on the data label in the refrigerator compartment.

IMPORTANT!

Valuable Dometic Refrigerator Warranty & Maintenance Schedule

Congratulations, and Thank You for purchasing the industry's best built and best backed RV Refrigerator. Enclosed you will find important warranty and maintenance information on Dometic's exclusive three (3) year warranty. Please take a few moments and familiarize yourself with the program. We at Dometic appreciate your business and are confident that you will have many years of trouble-free RV enjoyment.

LIMITED THREE-YEAR WARRANTY
DOMETIC REFRIGERATORS

THE SELLER NAMED BELOW MAKES THE FOLLOWING WARRANTY WITH RESPECT TO THE DOMETIC PRODUCT:

1. This warranty is made only to the first purchaser (herein after referred to as the "Original Purchaser") who acquires the product for his own use and is installed and operated within the continental United States and Canada.
2. This warranty will be in effect for three years on parts and freight and two years on labor from the date of purchase by the Original Purchaser. It is suggested that the original purchaser retain a copy of the dated bill of sale as evidence of the date of purchase.
3. This warranty covers only specified parts, which shall be free from defects in material and workmanship under normal use. This warranty does not cover conditions unrelated to the material and workmanship of the product. Such unrelated conditions include, but are not limited to: (a) damage not reported within the first 7 days of ownership; (b) faulty installation or installation that does not comply with RVIA standards, and any damage resulting from such; (c) the need for normal maintenance and any damage resulting from the failure to provide such maintenance; (d) failure to follow Sellers instructions for use of product; (e) any accident to or misuse of any part of this product and any alteration by anyone other than the Seller or its authorized representative; (f) any non-Dometic parts that are installed as replacement parts will void any warranty (implied or written); (g) blow out conditions; (h) radio frequency interference and electromagnetic interference; (i) 12V system chassis ground decay and corrosion; (j) puncture of foam cabinet or vacuum insulated panels after acknowledged receipt; (k) animal or insect infiltration which damages unit or inhibits performance; (l) abuse or misuse of electrical components.
4. The specified parts covered by this warranty are as follows: Major components (cooling unit, LP gas valve, burner, burner housing, electronic display, electronic module, evaporator fins, foam integrity, frame, thermister, spark probe, ignition wire, icemaker compressor, second absorption loop, display escutcheon, lower toe plate, humidity switch, frame heater mullion, icemaker mullion) are covered for parts and freight for three years and labor for two years from date of purchase. All other components that fail must be reported within the first 90 days of ownership in order to receive coverage of parts, freight and labor under warranty.
5. **This warranty requires the Original Purchaser to provide preventative maintenance on a yearly basis, starting at the anniversary of his date of purchase.** The Original Purchaser must keep a record of the preventative maintenance to keep the warranty in effect. Failure of the Original Purchaser in providing this annual maintenance may void the warranty. The preventative maintenance must be performed at a Dometic Authorized Service Center/Dealer. The preventative maintenance required is an inspection, cleaning and full diagnostics performed on the entire electronic system, burner assembly, wiring and cooling unit. A copy of the receipt covering the maintenance checks must accompany the warranty claim during the second and third year of ownership. The cost of this preventative maintenance is the Original Purchaser's responsibility and should take about one hour.
6. In order to obtain the benefits of this warranty, the original purchaser must return the product which is found defective to the Seller named below or to a Dometic Authorized Service Center during the period that this warranty is in effect. The original purchaser is responsible for all charges incurred in delivery of the product to the Seller or Dometic Authorized Service Center, and in pick up after the warranty service has been completed. To obtain the location of the nearest Authorized Service Center, please call 1-800-544-4881 or in Canada call 1-519-720-9578.
7. Any item returned in the manner described in paragraph 6 will be examined by the Seller or the Authorized Dometic Service Center. If it is found that the returned item was defective in material and workmanship, the Seller or the Authorized Dometic Service Center will repair the product per the terms outlined in paragraph 4. CONFIRM THE SERVICE AGENCY IS AN AUTHORIZED DOMETIC SERVICE CENTER. DO NOT PAY THE SERVICE AGENCY FOR WARRANTY REPAIRS. SUCH PAYMENTS WILL NOT BE REIMBURSED.
8. The Seller does not authorize any person or company to create any warranty obligations or liability on their behalf. This warranty is not extended by the length of time which you are deprived of the use of the product. Repairs and replacement parts provided under the terms of this warranty shall carry only the non-expired portion of this warranty.
9. In no event shall either seller be liable for incidental or consequential damages. This includes any damage to another product or products resulting from such a defect. Some states do not allow the exclusion or limitation of incidental or consequential damages, so the above limitations may not apply.
10. Any implied warranty, including the implied warranty of merchantability and fitness for any purpose, is limited to the duration of this limited warranty. Some states do not allow limitations on how long an implied warranty can last, so the above limitation may not apply.
11. THIS WARRANTY GIVE SPECIFIC LEGAL RIGHTS, YOU MAY ALSO HAVE OTHER RIGHTS WHICH VARY FROM STATE TO STATE. No action to enforce this warranty shall be commenced later than ninety (90) days after the expiration of the warranty period. Claims must be submitted in writing to the Dometic Warranty Department for arbitration.
12. All products (except those specifically built for commercial use) are warranted only when installed on vehicles built to R.V.I.A and C.R.V.A, Z-240 Standards.
13. The Seller reserves the right to change the design of any product without notice and with no obligation to make corresponding changes in products previously manufactured.

DOMETIC CORPORATION
Warranty Department
2320 Industrial Parkway
Elkhart, IN 46516
Phone: 574-294-2511
Fax: 574-293-9686

REFRIGERATOR OWNER MAINTENANCE YEARLY RECORD

Customer Name: _____ **Model No.:** _____ **Date of Purchase:** _____
Address: _____ **Serial No.:** _____
City: _____ **State:** _____ **Zip Code:** _____
Phone: _____

FIRST YEAR

Date: _____
Dealership: _____
_____
Address: _____
_____
City: _____
State: _____ Zip: _____
Phone: _____
Technician: _____

Cleaned Burner Assembly:	Yes / No
Cleaned/Check All Terminals Connections:	Yes / No
Cleaned/Inspect All Ground Connections:	Yes / No
Inspect and Test Door Seals:	Yes / No
Inspect and Tighten LP Lines:	Yes / No
Power Ventilator Installed:	Yes / No
*Gas Safety Shutdown in 45 seconds:	Yes / No

	ACTUAL	SPEC. RANGE
Electrode Gap	_____	3/16"
Thermister Reading	_____	7-10,000 ohms @ 32°
*D/C Voltage	_____	9.5 to 15 volts D/C
*A/C Voltage	_____	120 Volts ± 10%
Thermocouple Reading	_____	25-35 Millivolts
*Delay Between Modes	_____	Approx. 5 seconds

* Use PAL RV Diagnostic Tool for these tests.

ICEMAKER MODELS

Inspect Water Valve and All Connections:	Yes / No
Inspect Heat Tape Switch for Proper Operation:	Yes / No

SECOND YEAR

Date: _____
Dealership: _____
_____
Address: _____
_____
City: _____
State: _____ Zip: _____
Phone: _____
Technician: _____

Cleaned Burner Assembly:	Yes / No
Cleaned/Check All Terminals Connections:	Yes / No
Cleaned/Inspect All Ground Connections:	Yes / No
Inspect and Test Door Seals:	Yes / No
Inspect and Tighten LP Lines:	Yes / No
Power Ventilator Installed:	Yes / No
*Gas Safety Shutdown in 45 seconds:	Yes / No

	ACTUAL	SPEC. RANGE
Electrode Gap	_____	3/16"
Thermister Reading	_____	7-10,000 ohms @ 32°
*D/C Voltage	_____	9.5 to 15 volts D/C
*A/C Voltage	_____	120 Volts ± 10%
Thermocouple Reading	_____	25-35 Millivolts
*Delay Between Modes	_____	Approx. 5 seconds

* Use PAL RV Diagnostic Tool for these tests.

ICEMAKER MODELS

Inspect Water Valve and All Connections:	Yes / No
Inspect Heat Tape Switch for Proper Operation:	Yes / No

NOTES

PROTECTION FOR YOUR NEW INVESTMENT

We truly appreciate that you have chosen to purchase a Dometic product for your recreational vehicle and we want to help you protect this wise investment.

We at Dometic back our products with one of the most comprehensive warranties in the industry. Complete the registration card below and mail to us or register your Product on-line at www.edometic.com.

TIME-DATED MATERIAL Please Process Promptly!

Tape here

FIRST CLASS POSTAGE REQUIRED

Dometic®

Dometic Processing Center
2320 Industrial Parkway
Elkhart, IN 46516

Tape here

■ **WARRANTY VERIFICATION**
Your prompt registration records your right to protection under the terms and conditions of your warranty.

■ **OWNER CONFIRMATION**
Your completed Owner's registration card serves as confirmation of ownership in the event of product damage or theft.

■ **FACTORY COMMUNICATION**
Returning your card of registering on-line guarantees you will receive product information and specials. Leaving your email address below will allow us to communicate with you quickly and efficiently.

■ **3 PLUS 3 SERVICE CONTRACT**
Returning the card below or registering on-line assures you of an invitation to take advantage of an Optional 3 Plus 3 Full Service Contract which allows you to add up to 3 years of additional warranty coverage.

Return the card within **10** days to ensure your:

- WARRANTY VERIFICATION
- FACTORY COMMUNICATION
- OWNER CONFIRMATION
- 3 PLUS 3 SERVICE CONTRACT

Fold here. Close with tape.

TO THE INSTALLER
PLEASE AFFIX THESE INSTRUCTIONS TO THE REFRIGERATOR

—

TO THE CONSUMER
PLEASE RETAIN THESE INSTRUCTIONS FOR FUTURE REFERENCE

IMPORTANT: Return Within 10 days

Dometic®

Owner's Registration Card

Registering your product is an essential step to ensure that you receive all the benefits you are entitled to as a DOMETIC customer. Complete the information below and mail to us or register on-line at www.edometic.com.

Be sure to include your email address so that we can communicate with you quickly and efficiently. Your address will remain confidential and will not be distribute to third parties.

Name _____

Address _____

City _____ **Stat/Prov.** _____

Date of Purchase ___ ___ ___ (MO DAY YEAR) **Zip/Postal Code** _____ _____

Email Address _____

REFRIGERATOR MODEL NUMBER	SERIAL NUMBER