Dometic

INSTALLATION AND OPERATING INSTRUCTIONS

REFRIGERATOR FOR LP-GAS AND ELECTRIC OPERATION

RA/RM-1D
RA/RM-2D

CE

AES III

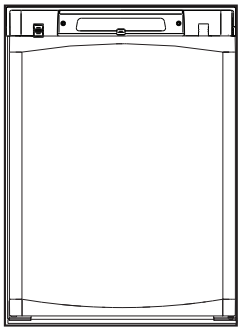

RM 2355

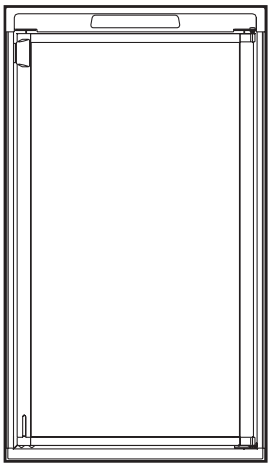

RM 2455
RM 2555

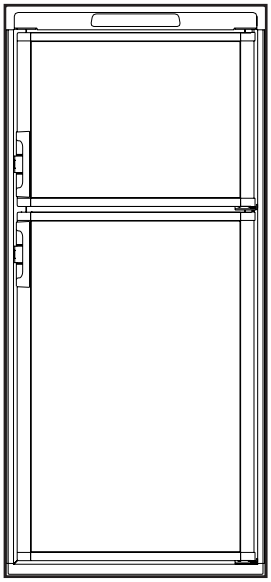

RM 4605

FOR YOUR SAFETY

If you smell gas:

1. **Open windows and door.**
2. **Don’t touch electrical switches.**
3. **Extinguish any open flame.**
4. **Immediately call your gas supplier.**

FOR YOUR SAFETY

Do not store or use gasoline or other flammable vapors and liquids in the vicinity of this or any other appliance.

WARNING

Improper installation, adjustment, alteration, service or maintenance can cause injury or property damage. Refer to this manual. For assistance or additional information consult a qualified installer, service agency or the gas supplier.

OPERATING AND INSTALLATION INSTRUCTIONS FOR RM 2355, RM 2455, RM 2555 & RM 4605

INTRODUCTION

We are pleased that you have chosen this refrigerator and hope you will derive much satisfaction from using it.

The refrigerator is designed for installation in motorhomes and intended for storage of foods, frozen foods and making ice. It comes with **Automatic Energy Selector (AES)** which controls operation and energy supply. To put the refrigerator in operation, just trip the main switch - **AES** manages the rest.

Read this manual very carefully before using the refrigerator. Make sure to retain it for future reference. In this manual you will find information on how to install, operate and maintain your new appliance. To ensure good refrigeration and economical operation, the refrigerator has to be installed and used as described in these instructions.

The installation must be performed by an authorised person and in accordance with the manufacturers installation instructions, local gas fitting regulations, municipal building codes, electrical wiring regulations, AS5601 “Gas Installations” and any other statutory regulations.

TRANSIT DAMAGE

Before you install your refrigerator, ensure to remove all protective packaging. Check for any damage or marks. Transit damage must be reported to whoever is responsible for delivery not later than seven days after the refrigerator was delivered.

DATA PLATE

Check the data plate, inside the refrigerator, to ensure that you have received the right model.

Below you can make a note of the details stated on the data plate. It is a good idea to this since this information is needed if you have to contact service personnel. The data plate contains e. g. the following details:

Model designation	**RM . . . . . .**
Product number	**. . . . . .**
Serial number	**. . . . . .**
Voltage	**230 - 240 volts**
Gas pressure	**2,70 kPa**

CONTENTS

OPERATING INSTRUCTIONS ____ 4

CONTROL PANEL 4
AES 4
STARTING THE REFRIGERATOR 4
LP GAS OPERATION 4
230-240V OPERATION. 4
12V OPERATION 4
SWITCHING BETWEEN ENERGY SOURCES 5
REGULATING THE TEMPERATURE 5
TRAVEL CATCH 5
USING THE REFRIGERATOR 5
DEFROSTING. 5
CLEANING THE REFRIGERATOR. 6
REPLACING THE BULB 6
HEATING CABLE 6
TURNING OFF THE REFRIGERATOR 6
PRODUCT CARE - SOME USEFUL HINTS. 6
TROUBLESHOOTING 6
MAINTENANCE 7
SERVICE AND SPARE PARTS. 7

INSTALLATION INSTRUCTIONS ____ 7

VENTILATION OF THE UNIT 7
CONNECTING POINTS 9
INSTALLATION/BUILDING-IN. 11
SECURING THE REFRIGERATOR 11
DRAIN WATER HOSE 12
CONNECTIONS 12
MOUNTING INSTRUCTIONS. 14
TECHNICAL DATA 16
REARVIEW EQUIPMENT. 17
WIRING DIAGRAM 18
WORKING INSTRUCTIONS FOR THE GAS SAFETY SYSTEM 20
APPENDIX A - AIRING POSITION CARD 21

OPERATING INSTRUCTIONS

CONTROL PANEL

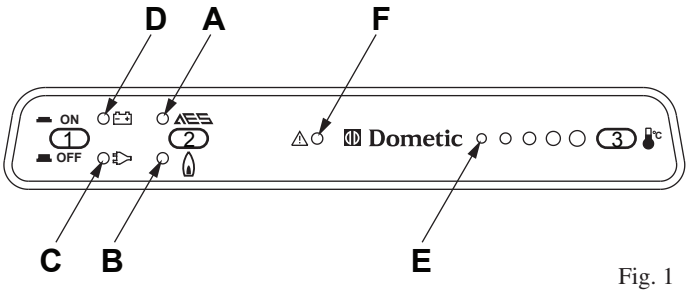

Fig. 1

1. ON/OFF button (main power button)
2. AES/GAS mode selector button
3. Temperature selector button

A. AES mode indicator lamp
B. GAS mode indicator lamp
C. AC mode indicator lamp
D. DC mode indicator lamp
E. Temperature indicator lamp
F. Warning indicator lamp (gas failure)

AES

The refrigerator is equipped with an Automatic Energy Selector (AES) controlling the operation and energy supply.

NOTE! 12V must always be available to supply the electronics.

The system selects the available energy source in the order:

1. 230-240V
2. 12V
3. LP gas

Turn off the AES function if you want the refrigerator to run on LP gas only.

STARTING THE REFRIGERATOR

Whilst mobile:
- **Do not operate the refrigerator on LP gas.**
- **Turn off the gas bottle.**

1. Press the ON/OFF button (**1**). The refrigerator starts in the mode it was in when it was turned off.
2. Press the AES/GAS button (**2**) and LED (**A**) or (**B**) comes on. Select AES or LP gas only by pressing the AES/GAS button (**2**) once if necessary.
3. If a 230V-240V mains supply is available:
   - AES selects this as the energy source and LEDs (**A**) and (**C**) come on.
   - When the vehicle's engine is running, AES selects 12V operation and LEDs (**A**) and (**D**) are illuminated unless LP gas only operation has been selected manually.

   If neither mains nor a 12V battery supply are available:
   - AES selects LP gas operation and LEDS (**A**) and (**B**) come on.

LP gas-only operation can be selected by pressing the AES/GAS button (**2**) until LED (**B**) comes on; the AES function is then turned off and LED (**A**) goes out. The Temperature selector button (**3**) is used to set the electronic thermostat. The LEDs (**E**) show the value set on the thermostat.

LP GAS OPERATION

AES will select LP gas operation under the following conditions:

- No AC (230-240V) available
- Engine not running (no high current at 12V DC available)

When the system chooses LP gas operation, the flame failure device is automatically opened, allowing the gas to flow to the burner. At the same time, the electronic igniter is energized.

After initial installation, servicing, or changing gas cylinders etc., the gas pipes may contain some air that should be allowed to escape by briefly turning on the refrigerator or other appliances. This will ensure that the flame lights immediately.

If the flame goes out (by gust of wind etc.), the reigniter will automatically relight the flame.

NOTE! The control electronics and the igniter must have 12V DC (battery) supply to operate.

GAS TROUBLESHOOTING

If the Warning indicator lamp (**F**) is lit, there has been a failure of gas operation. To troubleshoot, follow these steps:

1. Turn off the refrigerator. (Press the ON/OFF (**1**) to "OFF".)
2. Check that there is enough gas in the gas bottle, that its valve is open and that any valves in the gas line to the refrigerator are open.
3. Turn on the refrigerator again. (Press the ON/OFF button (**1**) to "ON" .) After 10 sec. AES will repeat the ignition sequence.
4. Should the warning lamp come on again after approx. 6 minutes, the failure is still present. Repeat the procedure *once* more. If this does not help, contact an authorised service provider in your area.

ABNORMAL OPERATION

Any of the following are considered to be abnormal operation and may require servicing:

- Yellow tipping of the burner flame.
- Sooting up area surrounding burner.
- Burner not igniting properly.
- Burner failing to remain alight.

In case the appliance fails to operate correctly, contact an authorised Dometic Service Centre.

230-240V OPERATION

When a mains connection is available, AES will select this. Please note, that even being in AC mode, 12V DC is necessary for the internal supply of the electronics.

12V OPERATION

AES will select the 12V mode of operation as soon as the vehicle engine is running (detected by the alternator connection of the fridge D+).

If the 12V DC goes down below 9V DC, the system will shut down completely.

SWITCHING BETWEEN ENERGY SOURCES

When switching from one energy source to another, there are some delays implemented in the AES system. The 15 min. delay between switching off the engine and starting gas mode is intended to delay the starting of gas mode e.g. when stopping at a filling station.

⚠ **WARNING! It is not allowed to have a naked flame at a gas filling station. If you are not sure, that your stop is shorter than 15 min., you are advised to set the ON/OFF switch (1) to "OFF", when stopping at a filling station.**

REGULATING THE TEMPERATURE

The position number refers to Fig.1.

It will take a few hours for the refrigerator to reach normal operating temperature. So we suggest you start it well in advance of a trip and if possible store it with precooled foodstuffs.

The temperature of the refrigerator main compartment is set for all three sources of energy, by means of the Temperature selector button (**3**). After turning on the refrigerator the system automatically chooses the mid-position. With some experience you will soon find a suitable setting, bigger circles indicate lower temperatures. This normally does not need resetting because the same thermostat controls the main compartment temperature for any of the three sources of energy.

TRAVEL CATCH

Make sure that the travel catch is engaged when the motorhome is on the move.

USING THE REFRIGERATOR

⚠ **WARNING! DO NOT store explosive substances in the refrigerator, such as cigarette lighter gas, gasoline, ether or the like.**

FOOD STORAGE

Always keep food in closed containers. Never put hot food in the refrigerator; allow it to cool first.
The frozen food compartment is intended for the storage of frozen food and for making ice. Most kinds of frozen food can be stored in the frozen food compartment for about a month. This period of time may vary, however, and it is important to follow the instructions on the individual packages.

ICE MAKING

Fill the ice tray to just below the brim with drinking water and place them on the bottom of the freezer compartment. Ice will be made more rapidly if the thermostat is set at its highest position (biggest circle), but be sure to move the thermostat back to normal setting when the ice is formed; the refrigerator might otherwise become too cold.

DEFROSTING

Frost will gradually accumulate on the refrigerating surfaces. Each time the door is opened some of the cold air in the refrigerator spills out and is replaced by warm moist room air. As this air is cooled, the moisture is deposited onto the evaporator coils or other cold surfaces inside the refrigerator and can cause frost build-up. It is important that you do not leave the unit's door open any longer than necessary. This will reduce frost formation and increase the efficiency of your refrigerator. The frost must not be allowed to grow too thick as it acts as an insulator and adversely affects refrigerator performance. Check the formation of frost regularly every week and when it gets about 3 mm thick, defrost the refrigerator.

Do not try to accelerate defrosting by using any kind of heating appliance, as this might damage the plastic surfaces of the refrigerator. Neither should any sharp objects be used to scrape off the ice.

RM 2355

RM 2455

RM 2555

To defrost the refrigerator, follow these steps:

1. Turn off the refrigerator. (Press the ON/OFF button (**1**) to "OFF".)
2. Empty the refrigerator. (Remove ice trays and food.)
3. Leave the drip tray under the finned evaporator.
4. Leave the cabinet and freezer door open.

Defrost water runs from the drip tray through a plastic drain water hose to the outside of the vehicle. When all the frost has melted - dry the interior of the refrigerator with a clean cloth and replace ice trays and food. Set the thermostat to the coldest position for a few hours. Then, reset the thermostat to the desired setting, usually at mid setting.

RM 4605

To defrost the refrigerator, follow these steps:

1. Turn off the refrigerator. (Press the ON/OFF button (**1**) to "OFF".)
2. Empty the refrigerator. (Remove ice trays and food.)
3. Leave the cabinet and freezer door open.

Defrost water runs from a collector channel to a receptacle at the rear of the refrigerator where it normally evaporates. With a lot of defrost water, as a result of heavy frost build-up on the freezer plate and the cooling fins, move the plastic drain tube in to a watertight bucket or container. (Access through the lower ventilation grill on the outside of the vehicle). As the frost melts, the water will flow into the container. Replace the drain tube to its original position after defrosting. Defrost water in the freezer compartment should be mopped up with a cloth.

When the ice has melted - wipe the refrigerator dry, restart it and then, place the food items back inside but wait until the refrigerator is cold before making ice cubes.

CLEANING THE REFRIGERATOR

Clean the inside of the refrigerator regularly to keep it fresh and hygienic.

Soak a cloth in a solution consisting of a teaspoon of bicarbonate of soda to half a litre of warm water. Wring out the cloth and use it to clean the interior of the refrigerator and its fittings.

Never use detergents, scouring powder, strongly scented products or wax polish to clean the interior of the refrigerator as they may damage the surfaces and leave a strong odour.

The exterior of the refrigerator should be wiped clean now and then, using a damp cloth and a small quantity of detergent. But not the door gasket, which should only be cleaned with soap and water and then thoroughly dried.

The cooling unit behind the refrigerator should be cleaned with a brush from time to time, but make sure that the refrigerator is switched off when doing this.

REPLACING THE BULB

To replace the bulb, follow these steps:

1. Remove the lamp cover.
   (RM 4605 - push the lamp cover backwards)
2. Replace the old bulb with an appliance bulb of the same wattage (12V, max 10W).
3. Replace the cover.

RM 4605

HEATING CABLE

During the summer months of high temperatures and humidity, the metal frame between the freezer and fresh food compartments may have water droplets forming. This refrigerator comes standard with a 12V DC heating cable that will evaporate the water droplets when they form.

To have the heating cable on, you position the switch located beneath the control panel to I, see Fig. 2.
The heating cable can be left on continuously or only used when temperatures require it.

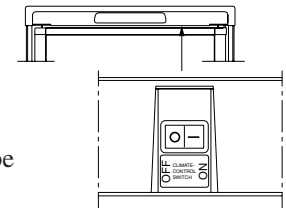

Fig. 2

NOTE! The heating cable will draw 12V DC power continuously when in the ON (I) position. It should be turned off when a charging source is not available.

TURNING OFF THE REFRIGERATOR

If the refrigerator is not to be used for some time:

1. Turn off the refrigerator. (Press the ON/OFF button (**1**) to “OFF”.)
2. Shut off any on-board valve in the gas line to the refrigerator.
3. Pull out the plug from the wall socket.
4. Empty the refrigerator. Defrost and clean it as described earlier. Leave the doors of the refrigerator and frozen food compartment ajar.

PRODUCT CARE - SOME USEFUL HINTS

Make sure that:

- Defrosting is carried out periodically.
- The refrigerator is clean and dry with the door left open when it is not to be used for some time.
- Liquids or items with a strong odour are well packed.
- The ventilation openings are unobstructed.
- The doors are secured by means of the travel catch when the motorhome is on the move.

TROUBLESHOOTING

IF THE REFRIGERATOR FAILS TO WORK

Before calling an authorised service technician:

- Ensure that the instructions in this manual have been followed.
- Check to make sure that the refrigerator is not tilted excessiveley.
- Verify that the LEDs on the control panel are lit when the ON/OFF button (**1**) is turned on. (12V must be available.)
- Check the fuses on the circuit board which is located under the cover on the back of the refrigerator.
- If the mains voltage are connected but the refrigerator stays in gas operation -> is the refrigerator correctly connected and is the fuse (230-240V) intact?
- If the refrigerator does not operate in DC mode when the engine is running -> is the alternator (D+) connection made correctly?
- If the Warning indicator lamp (**F**) lights up -> see ”GAS TROUBLESHOOTING” for further information.

THE REFRIGERATOR IS NOT COLD ENOUGH

If the refrigerator is not cold enough it may be because:

- The ventilation is inadequate owing to reduced area of the ventilation passages (partial blockage of grilles from wire mesh etc.).
- The evaporator is frosted up.
- The temperature control setting is incorrect.
- The gas pressure is incorrect - check the pressure regulator at the gas container.
- The ambient temperature is too high.
- Too much food is loaded at one time.
- The door is not properly closed or the magnetic sealing strip is defective.

If the refrigerator still does not work properly, call an authorised service technician.

WARNING! The sealed cooling system must not be opened, since it contains corroding chemicals under high pressure.

MAINTENANCE

- This appliance must be serviced by an authorised person. We recommend that an authorised service technician checks the refrigerator once a year.
- The “Installation and operating instructions manual” should always be available.
- Ensure that the gas safety shut-off valve is working properly.
- Make sure that the ventilation openings are unobstructed.
- See to it that the burner is clean and free from combustible material.
- All connections in the LP gas system should be checked for gas leaks. Connections can be tested for leaks using a soap solution. **DO NOT use a naked flame!** If there is any suspicion of damage, call for an authorised service technician.

SERVICE AND SPARE PARTS

Service and spare parts are obtainable from your dealer or Dometic - consult the telephone directory.

INSTALLATION INSTRUCTIONS

The refrigerator is intended for installation in a motorhome, and the information relates to this application. A correct installation is important for correct operation of the appliance. The refrigerator must be installed on a solid floor and must be level. With the vehicle carefully levelled, the refrigerator should be level both ways in the freezer compartment. Free air circulation over the fins of the cooling unit is essential.

VENTILATION OF THE UNIT

VENTILATION GRILLES

We recommend fitting the Dometic ventilation system, which is specially developed by Dometic for this purpose. The Dometic ventilation grilles permit inspection and small repairs to be carried out without the necessity of removing the refrigerator from the recess.

If there is no outer grille at floor level where leaking gas can escape, a 40 mm hole to the outside should be made in the floor of the recess to drain any unburned gas to the outside. Fit the hole with wire mesh and an angled plate to protect it from stones, mud etc.

SIDE VENTILATION

The refrigerator unit is ventilated via two openings in the wall of the motorhome. Fresh air enters through the lower opening and warm air is discharged through the upper one.

The lower opening should be located at floor level (to allow any leaking gas to escape to the outside). The upper ventilation opening should be located above the condenser, as high as possible, to ensure good ventilation.

ROOF VENTILATION

The ventilation of the cooling unit can also be done via one opening in the wall of the motorhome and one on the roof for the roof vent.

Fresh air enters through the lower opening and warm air is discharged through the roof vent. The lower opening should be located at floor level (to allow any leaking gas to escape to the outside).

REMOVAL OF FLUE GASES

The ventilation passage at the rear of the recess, between the outer wall of the vehicle and the refrigerator must be sealed off against the living space, so cold draughts are excluded (winter camping) and **no flue gases can penetrate into the motorhome**.

The flue gases are dispersed from the ventilation passage using the Dometic flueing system. The top, bottom and sides of the ventilation passage should be insulated to prevent condensation and cold draughts. The ventillation passage walls must be constructed of a non combustable material.

VENTILATION HEIGHTS

Minimum ventilation heights (mm)		
	Installation with upper and lower side vent	Installation with roof vent and lower side vent
RM 2355 (Fig. 3)	864	787
RM 2455 (Fig. 4)	960	960
RM 2555 (Fig. 4)	1130	1130
RM 4605 (Fig. 4)	1760	1465

NOTE! At extreme ambient temperatures the refrigeration unit will only perform adequately when properly ventilated.

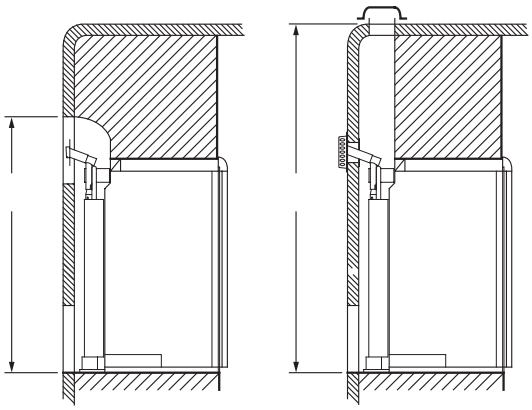

Fig. 3
RM 2355

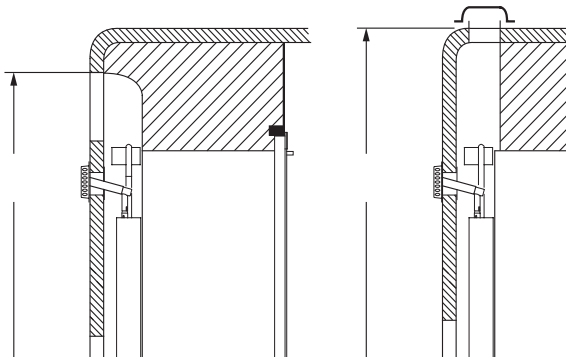

Fig. 4
RM 2455
RM 2555
RM 4605

CLEARANCES

Minimum clearances (mm) to combustible materials are:

		RM 2355 (Fig. 5 & Fig. 6)	RM 2455 - RM 2555 - RM 4605 (Fig. 5 & Fig. 7)
G	Top	0	0
K	Side	0	0
L	Bottom	0	0
M[1]	Rear	25	0

[1] The distance between the rearmost part of the refrigerator and the wall behind the refrigerator.

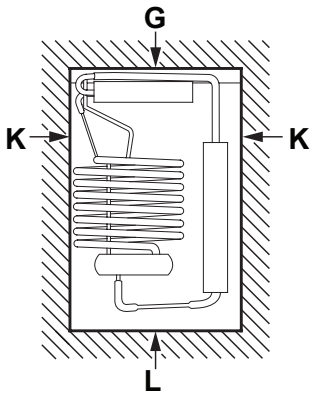

Fig. 5

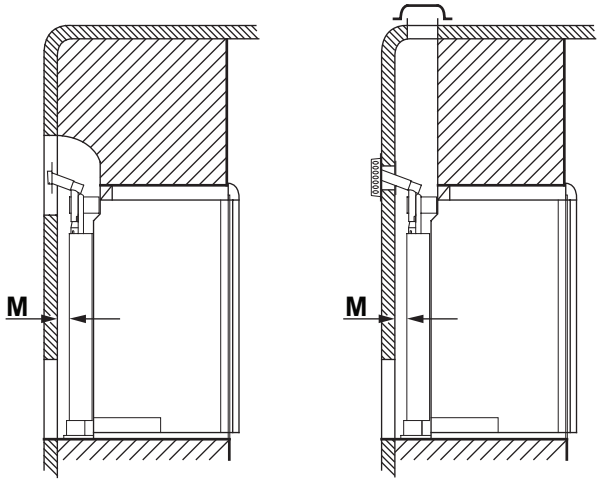

Fig. 6
RM 2355

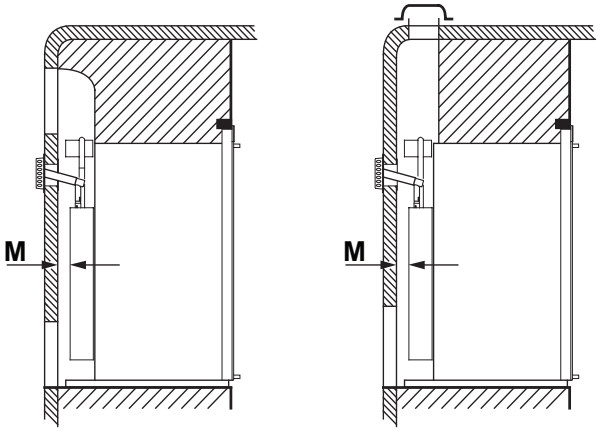

Fig. 7
RM 2455
RM 2555
RM 4605

CONNECTING POINTS

Dimensions to connecting points (mm).

RM 2355

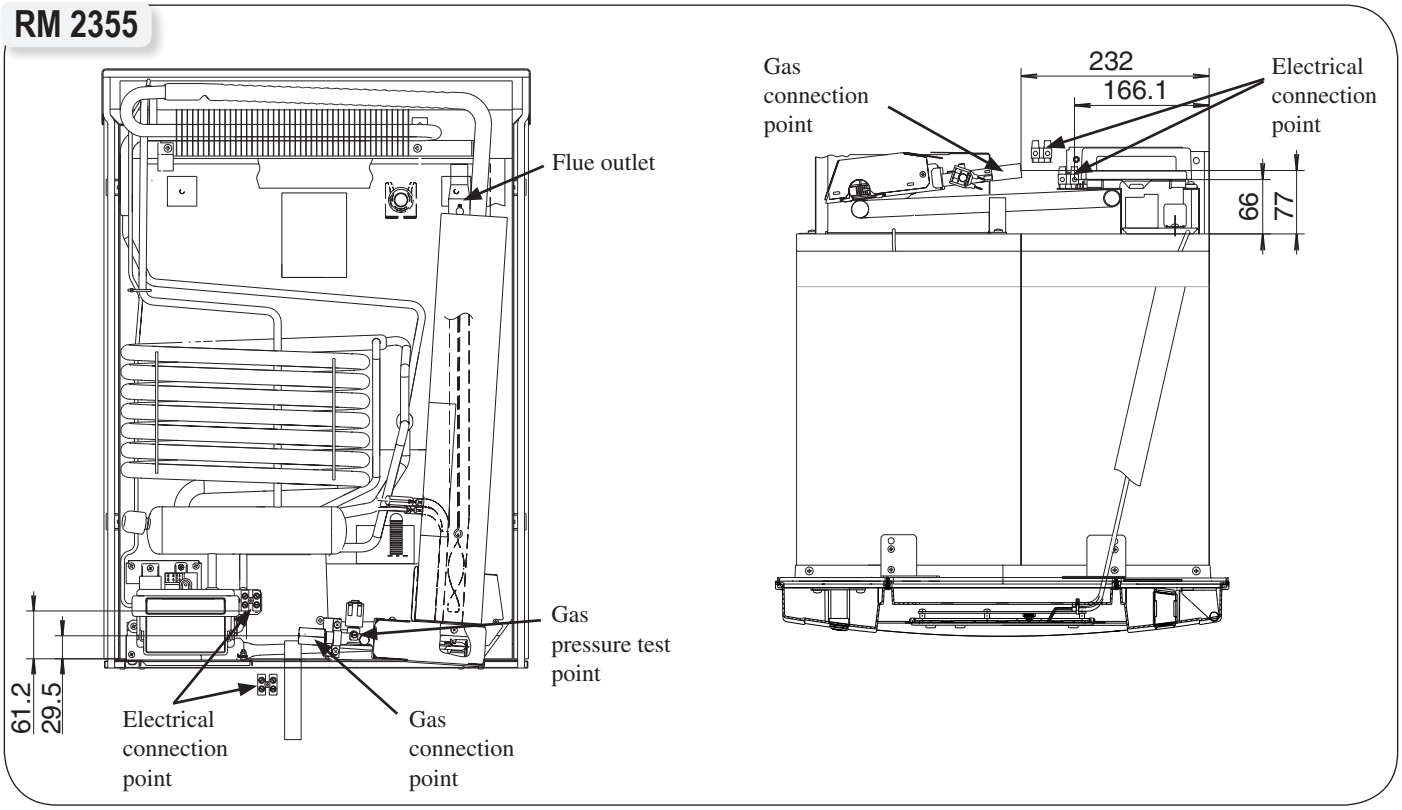

RM 2455

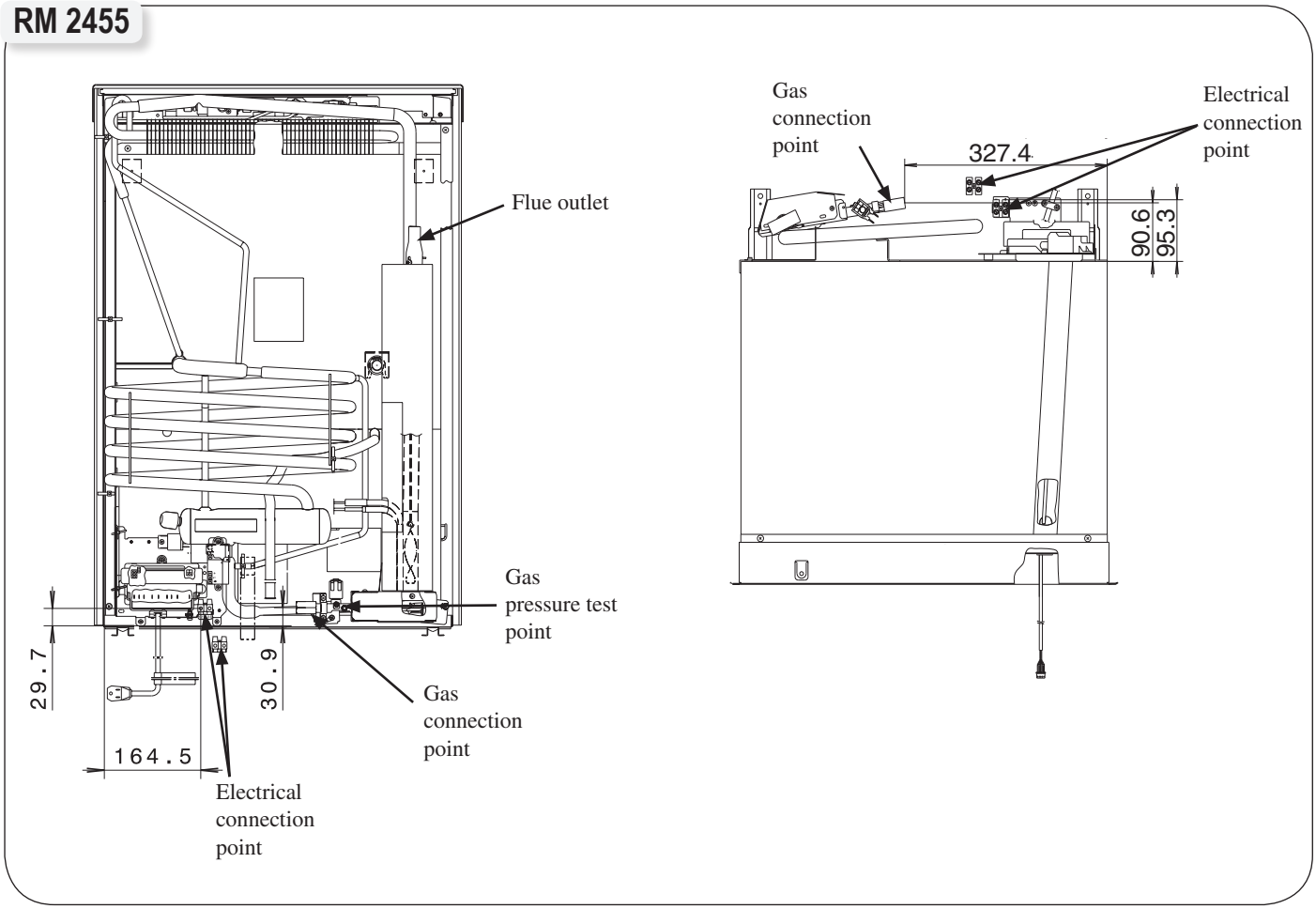

RM 2555

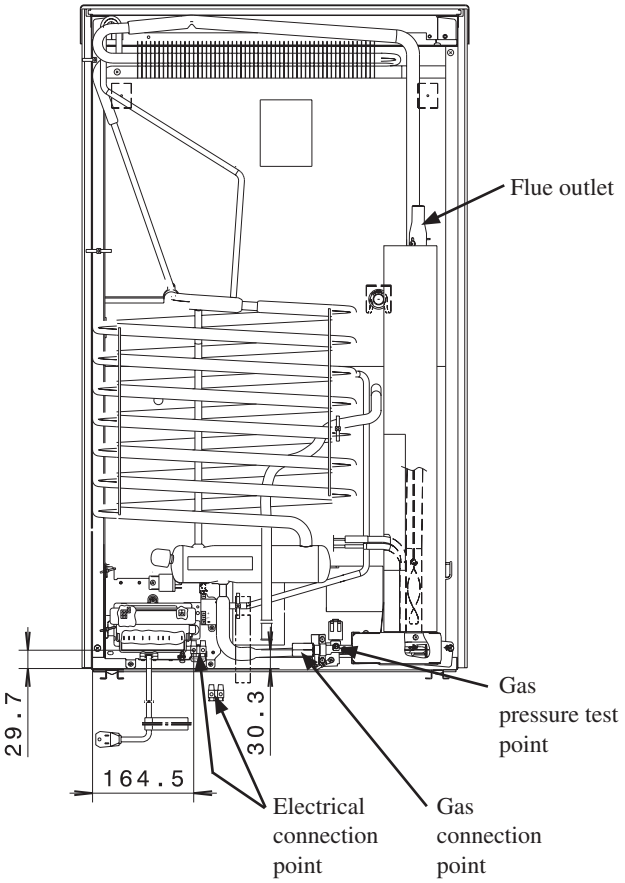

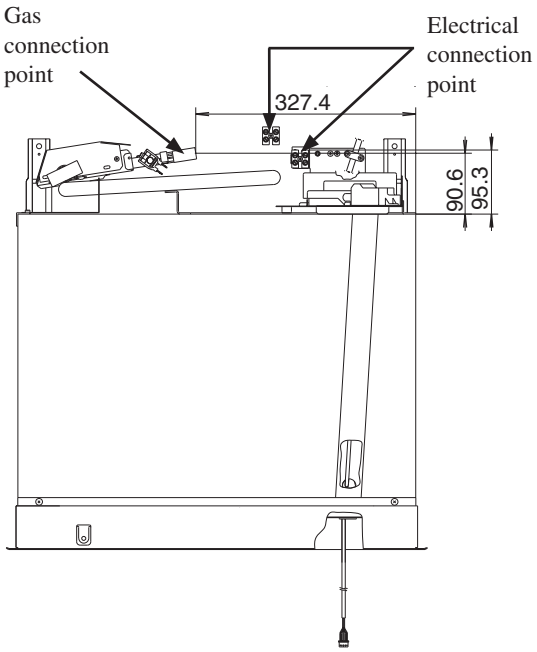

RM 4605

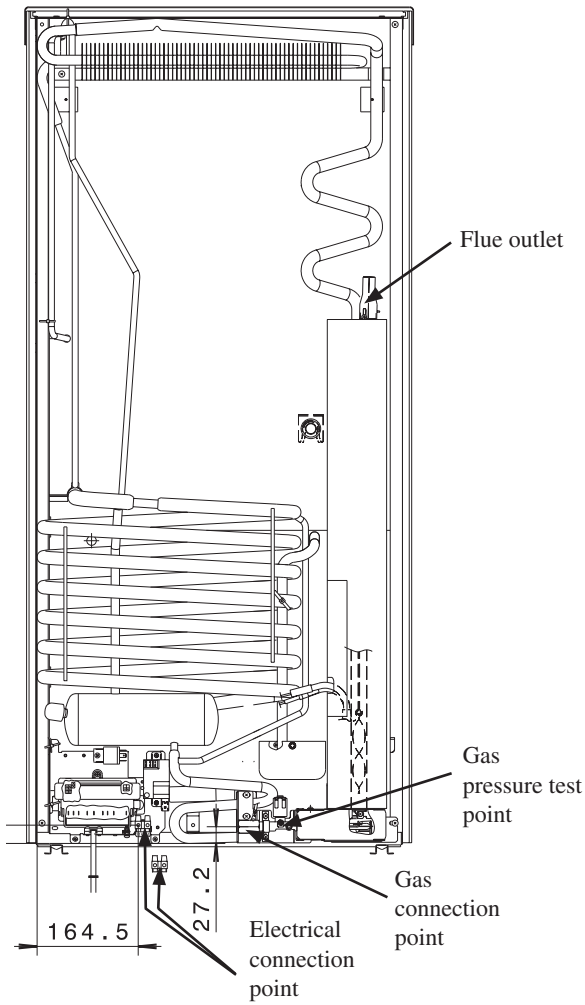

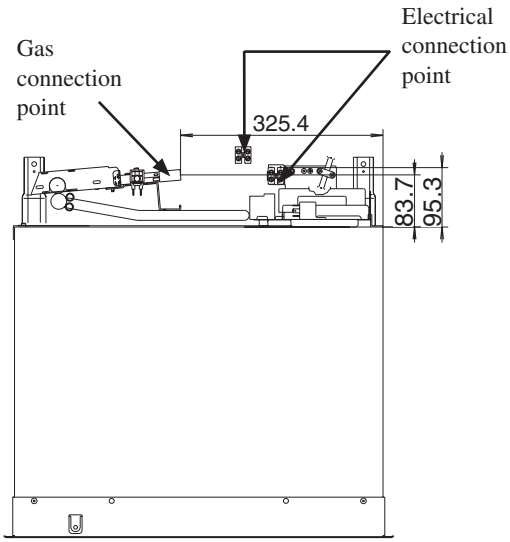

INSTALLATION/BUILDING-IN

The refrigerator must not be exposed to radiated heat from hot objects. Excessive heat irradiation impairs performance and leads to increased energy consumption. For this reason the refrigerator should be installed if possible not at the entrance side of the vehicle - normally orientated south and often with an awning which would impair the dispersion of heat and combustion gases from the ventilation openings.

It is not a good practice to install the refrigerator so that the vent openings are covered by the vehicle's entrance door when this is set open. This would reduce the ventilation airflow to the cooling unit and reduce refrigeration performance.

The refrigerator has to be installed in a substantial enclosure and must be level. For information about dimensions, see "TECHNICAL DATA".

The bottom of the enclosure must be horizontal and even so that the refrigerator can be easily pushed into place. It must be sturdy enough to carry the weight of the refrigerator.

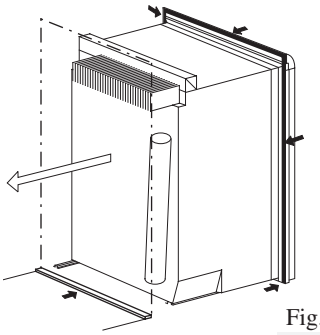

Fig. 8
RM 2355

A length of sealing strip is applied to the rear surface of the front frame for this purpose, see Fig. 8 / Fig. 9.

Make sure that there is a complete seal between the front frame of the refrigerator and top, sides and bottom of the enclosure.

Push the refrigerator into the recess until the sealing strip on the flange seals against the front of the recess, so that the cooling unit is completely sealed off against the interior of the motorhome.

Note! Be careful not to damage the sealing strip when the refrigerator is put in place.

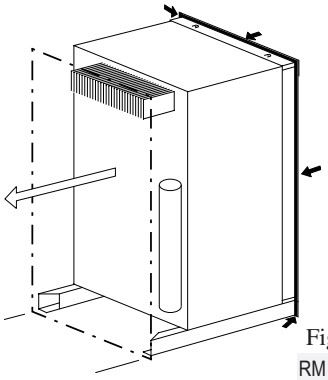

Fig. 9
RM 2455
RM 2555
RM 4605

RM 2455
RM 2555
RM 4605

A wood strip must be in place across the upper opening of the enclosure. The top frame of the refrigerator will be anchored to the wood strip with screws.

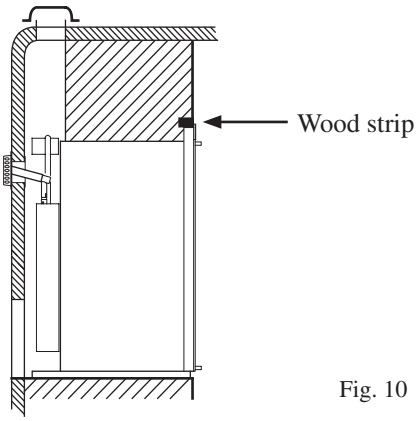

Fig. 10

SECURING THE REFRIGERATOR

For the best cooling performance, when installing the refrigerator model(s):

- RM 2355 - the installer must block the space between the storage cabinet and the top of the refrigerator.
- RM 2455, RM 2555 & RM 4605 - the installer must block any space between the counter, storage area or ceiling and top of the refrigerator greater than 40 mm.

Otherwise the heat will become trapped in this space, making the top of the refrigerator hot, thus reducing the efficiency of the unit.

After the refrigerator is put in place, insuring a combustion seal at the front frame, the refrigerator is to be secured in the enclosure with screws. (These screws are not included.)

Failure to follow the sequence in securing the refrigerator in enclosure can cause leakage between the frame and cabinet.

RM 2355

The five screws should be installed in the following order:

1. Four screws installed through the front frame.
2. One screw installed in rear base.

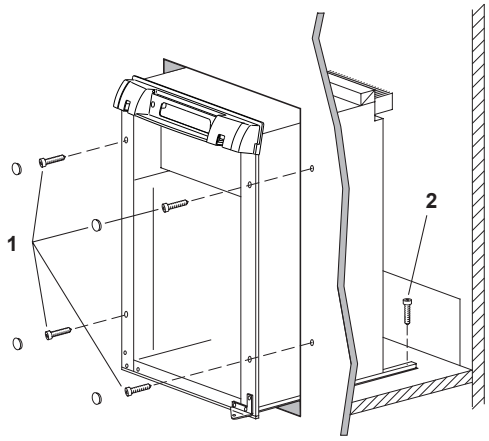

Fig. 11

RM 2455
RM 2555
RM 4605

The six screws have to be installed in the following order:

1. Two screws installed through the front base. This step also includes the installation of the lower front strip. The refrigerator is provided with a lower front strip (shipped as a loose part) which is to be attached after the refrigerator is set into the cutout opening.
   a) Install the lower front strip by sliding it under the bottom hinge plate, as shown in Fig. 12.

The hinge plate can be on the right or left side depending on the door swing.

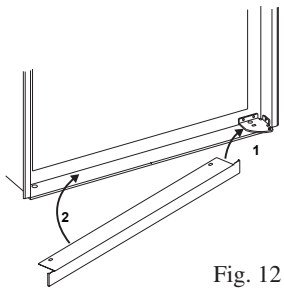

Fig. 12

b) Once the lower front strip is slipped under the hinge, the part is possible to swing into place as shown in Fig. 13.

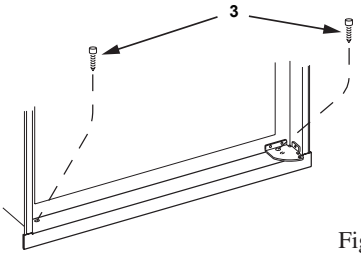

Fig. 13

c) Secure the refrigerator and the lower front strip with two screws: One screw through the hinge, and on the opposite side and then, one screw through the lower front strip, see Fig. 13.

2. Two screws installed in the top frame.

a) Remove the top decoration panel. Open the door and gently push the tabs out of the hole in the hinge with a flat blade screwdriver, (both sides), see Fig. 14.

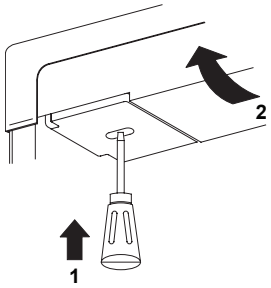

Fig. 14

RM 2455

RM 2555

RM 4605

b) Carefully tilt the top decoration panel and lift up to remove from top frame. Be careful not to damage the circuit board and wires.

c) Install the two screws in the top frame, the holes are accessible from underneath.

d) Seal the opening for the screws with aluminium tape.

e) Replace the top decoration panel. Be careful not to pinch the wires behind the panel. Make sure the tabs snap back into the holes in the hinge plate.

3. Two screws installed in the rear base, see Fig. 15.

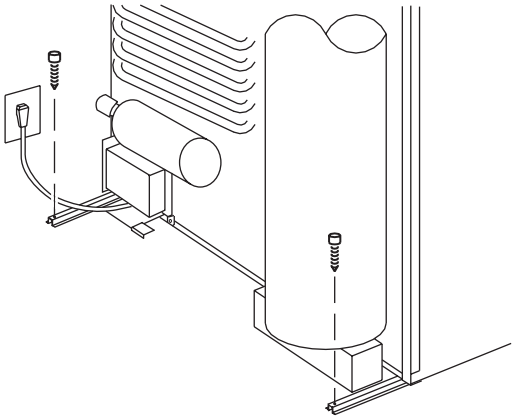

Fig. 15

DRAIN WATER HOSE

A hole must be drilled through flooring see Fig. 16 / 17.

The installer has to make sure that the hose does not kink when run through the floor. Seal around the hose that goes through the drilled hole.

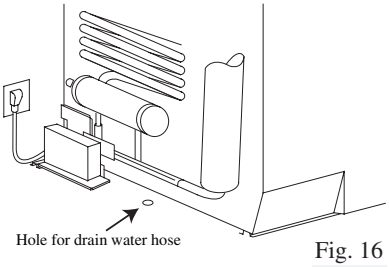

Fig. 16
RM 2355

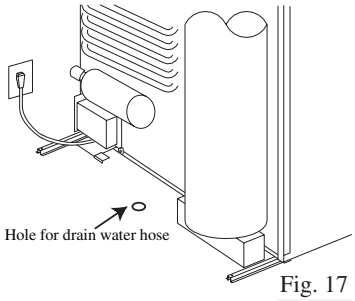

Fig. 17
RM 2455
RM 2555
RM 4605

If a longer hose than supplied is required to get the water to drain outside of the vehicle, the installer will have to supply the extra length of hose.

CONNECTIONS

LP GAS CONNECTION

The refrigerator is designed for operation on Propane (Propane only Australia) and LP gas (LP gas New Zealand).

NOTE! Alternative gas types must not be used to operate this appliance!

The gas supply system must incorporate an approved gas pressure regulator to maintain a supply pressure of 2.75 kPa. The test point pressure must be 2.70 kPa. Check that this is stated on the data plate.

CAUTION! Check that the gas supplied to the refrigerator is at the correct pressure.

The gas installation and servicing must be carried out by an authorised person and conform to gas fitting regulations.

The appliance shall be installed in accordance with AS 5601-Gas Installations.

The gas supply pipe should be connected to the gas inlet connection at the rear of the refrigerator by means of a suitable threaded coupling.

The connection nipple is furnished with an ISO 7/1 - Rp 1/8 internal pipe thread connection.

In making the connection to the refrigerator, a union gas cock of an approved type bottled gas must be incorporated in the supply line in a position that is readily accessible to the user. For eventual servicing purposes, the union should be on the outlet side of the cock and the pipework should be positioned so as not to prevent the refrigerator from being readily withdrawn.

Before leaving, the installer should:

- Check all connections for gas leaks with soap and water. DO NOT use a naked flame for detecting leaks!
- Ignite the burner to ensure correct operation of gas valve, burner and ignition.
- Instruct the user on the correct method of operation. In case the appliance fails to operate correctly after all checks have been carried out, contact the authorised service provider in your area.

ELECTRICAL CONNECTION

The electrical installation must be carried out by authorised personnel.

NOTE! For mains voltage operation, it is important that the circuit to and in the motorhome is effectively earthed.

The refrigerator is equipped with a three-prong (grounding) plug for your protection against shock hazards and should be plugged directly into a properly grounded threeprong receptacle. DO NOT cut off or remove the grounding prong from this plug.

If the supply cord is damaged, it must be replaced by the manufacturer, its service agent or similarly qualified persons in order to avoid a hazard.

230-240V SUPPLIES

Check that the voltage stated on the data plate is the same as the main voltage in use (230-240V).

NOTE! Electrical leads must be routed and secured so that they cannot come into contact with hot or sharp parts of the refrigerator.

The free length of the cord is 1 m. It is recommended that the receptacle is located on the left side of the refrigerator (viewed from the rear) and approximately 150 mm from the floor. This allows easy access through the vent door. The cord should be routed to avoid direct contact with the burner cover, flue cover or any other components that could damage the cord insulation.

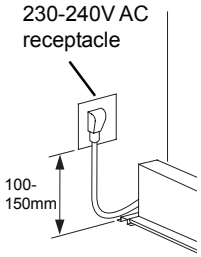

Fig. 18

12V AND "D+" CONNECTION

The refrigerator is equipped with two terminals intended for connection to 12 volt. One is marked "Connect to permanent 12 Volt DC house battery"and the other is marked "Connect to Vehicle 12 Volt DC battery", see Fig. 19

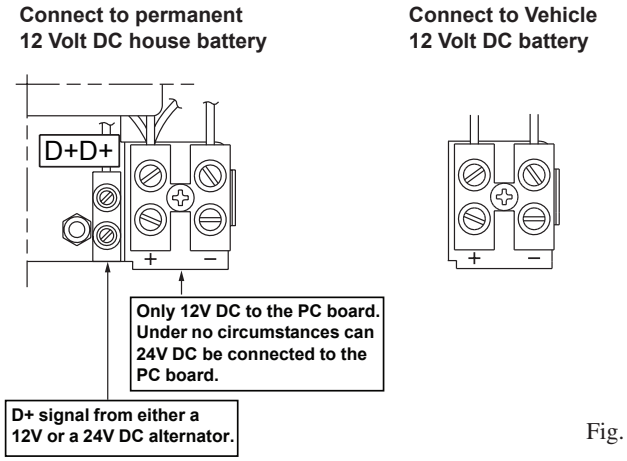

Fig. 19

NOTE!

- **For a Motor Home the house battery and the vehicle battery may be the same battery.**
- **For a caravan the 12 volt connections can only be made to separate batteries.**

CONNECTION MARKED "CONNECT TO VEHICLE 12 VOLT DC BATTERY"

This connection supplies the 12 V DC heating element.

The (+12V) and (-) poles have to be connected directly to the vehicle battery. (Via a suitable connection to the tow vehicle when fitted to a caravan.)

The (+12V) supply wire, connected to the terminal block (S) on the wiring diagrams, has to be fused according to the following table:

Model	Fuse size (A)
RM2355	20
RM2455	20
RM2555	20
RM4605	30

Do not use the chassis for the return lead.

Cross-sections
The wires connected to this terminal must have the following minimum cross section area:

- RM 2355, RM 2455, RM 2555
  Maximum length of 8 metres from refrigerator to the battery. 6 mm^2 cross-section low voltage multi strand cable.
- RM 4605
  Maximum length of 8 meters from refrigerator to the battery. 10 mm^2 cross-section low voltage multi strand cable.

Cable lengths longer than 8 meters will require larger cross-sectional cable.

CONNECTION MARKED "CONNECT TO PERMANENT 12 VOLT DC HOUSE BATTERY".

This connection supplies the AES refrigerator control system and must not be interrupted at any time whilst using the refrigerator on 240 volt, gas, and 12 volt. This is a permanent 12 volt connection.

The (+12V) and (-) poles have to be connected directly to the permanent 12 V DC house battery.

Do not use the chassis for the return lead.

The 12V supply must not be connected to a voltage controller or similar device as the AES control system itself monitors the DC voltage.

The +12V must be permanently attached and must not be cut out when the ignition key is turned off. All connections should be screwed or soldered to keep voltage drop to a minimum.

Cross-sections
The wires connected to this terminal must have a minimum cross-section area of 1.5 mm^2.

D+ CONNECTION

The connection D+ (alternator) has to be connected to the corresponding outlet of the vehicles electrical system - either a 12 V or a 24V DC alternator. The D+ connection accepts 24 V. Please note that the refrigerator accepts 12 V only. Do not connect the refrigerator to 24 V!

This connection provides a signal to the refrigerators AES control system informing the control system when the vehicle engine is running.

The AES refrigerator can not select 12 V as the energy source unless the vehicle engine is running.

Cross-sections
The D+ (alternator) is a signal cable and therefore 1-1.5 mm^2 is sufficient.

MOUNTING INSTRUCTIONS

REPOSITIONING THE HINGES

The refrigerator is equipped with reversible doors. A special door reversing kit must be used to reverse the doors. This kit must be bought separately:

- RM 2355, part number 3850304-02
- RM 2455 and RM 2555, part number 2932750-13
- RM 4605, part number 2932750-11 (black) and 2932750-08 (brown)

For further information, please contact your dealer.

MOUNTING THE DOOR PANEL

Door panels are not supplied with the refrigerators and must be supplied by the manufacturer. This enables the manufacturer to match the door panel with the rest of the cabinetry inside the motor home or caravan.

Before starting the mounting work, read the instructions thoroughly and check that the panel dimensions are in compliance with those given in the following table:

Dimensions (mm)			
	Height	**Width**	**Thickness max.**
RM 2355	666±1	497±1	4
RM 2455	826±1	526±1	4
RM 2555	982±1	526±1	4
RM 4605	402±1 (upper door) 826±1 (lower door)	525 ±1	4

With screws (see Fig. 20 and Fig. 22)

To mount the door panel, follow these steps:

1. Open the door 90 degrees.
2. On new refrigerators, the decoration strip is taped inside the door; if installed on the door, remove the door decoration strip (2) by removing its three screws (1).
3. Remove the old panel.
4. Insert the new panel by inserting the vertical edges into the grooves of the door frame (3). Then, push the panel downwards so that the lower horizontal edge of the panel (4) is fitted into the bottom grove (5).
5. Put the decoration strip across the door so that the gap is covered.
6. Secure the decoration strip with the three screws removed in step 2.

Snap in (see Fig. 21 and Fig. 22)

To mount the door panel, follow these steps:

1. Open the door 90 degrees.
2. On new refrigerators, the decoration strip are taped inside the door; if installed on the door, remove the door decoration strip (2) by gently pushing the four tabs away with a flat blade screwdriver (1).
3. Remove the old panel.
4. Insert the new panel by inserting the vertical edges into the grooves of the door frame (3).
5. Push the panel downward so that the lower horizontal edge of the panel (4) is fitted into the bottom grove (5).
6. Snap in the decoration strip (2).

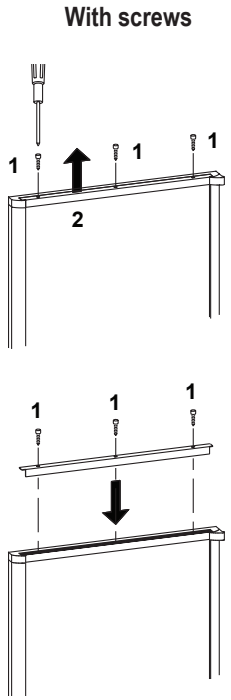

Fig. 20

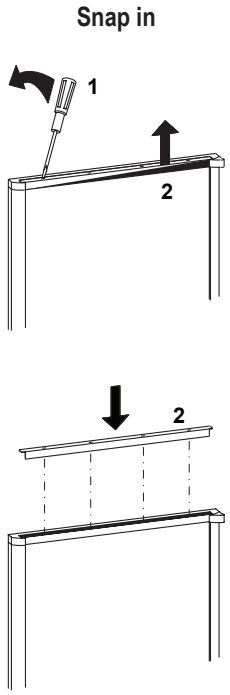

Fig. 21

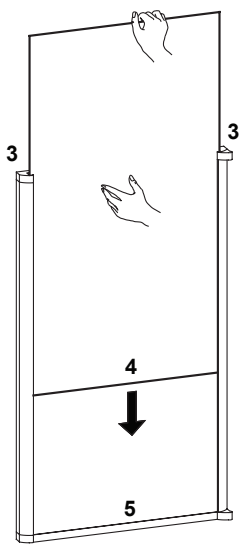

Fig. 22

POSITIONING OF SHELVES

1

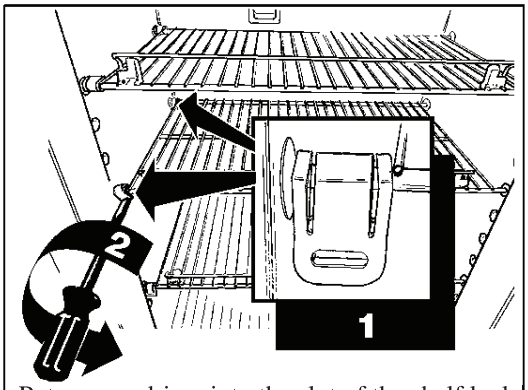

Put a screwdriver into the slot of the shelf lock.
Turn the screwdriver counterclockwise.
Remove the shelf locks from the wire shelf.

2

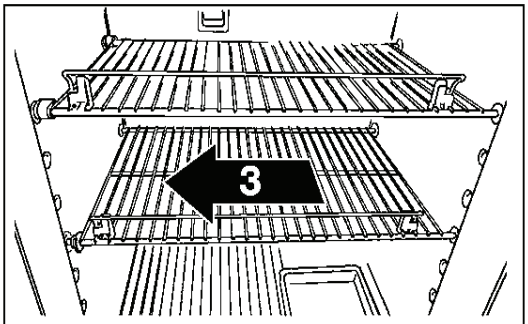

Slide the wire shelf to the left.
The right-hand side of the shelf will come loose.

3

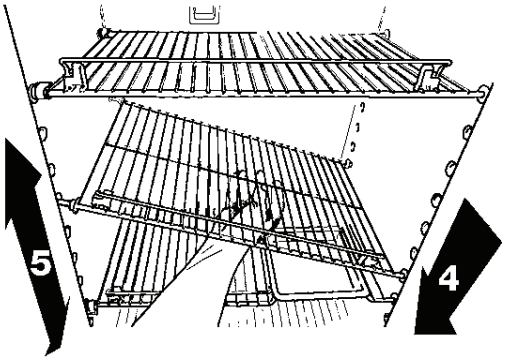

Lower the right-hand side of the wire shelf and let the left-hand side slide out of the holes in the wall.

4

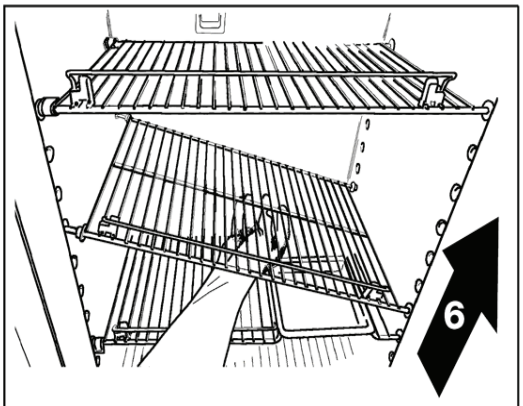

Insert the ends of the wire shelf on the left-hand side at the desired position.

5

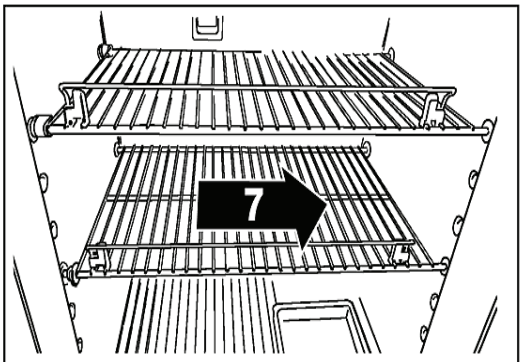

Slide the shelf into the holes on the right-hand side.

6

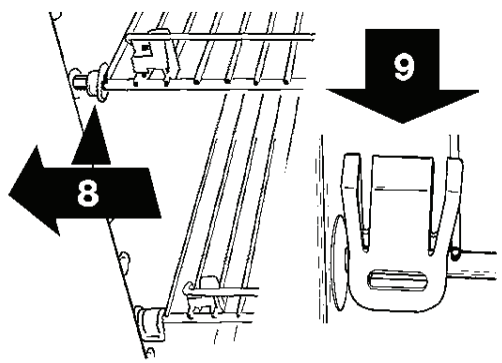

Slide the plastic plugs into the holes of the wall. Snap the shelf locks onto the wire shelf.

TECHNICAL DATA

	RM 2355	RM 2455	RM 2555	RM 4605
Overall dimensions				
Height (mm)	766	948	1104	1385
Width (mm)	556	632	632	632
Depth incl. cooling unit (mm)	577	627	627	627
Recess dimensions				
Height (mm)	756	928	1083	1365
Width (mm)	521	602	602	602
Depth (mm)	542	610	610	610
Capacity				
Gross (litres)	90	121	150	186
Weight without packaging (kg)	29	39	44,5	56,5
Electrical data (watt)				
Input 240V	175	195	195	325
12V	175	175	175	275
LP gas data				
Input, max (MJ/h)	1.10	1.16	1.16	1.66

* Average consumption in 24 h at 25°C means annual ambient temperature according to ISO standards. Subject to alteration without notice.

REARVIEW EQUIPMENT

RM 2355

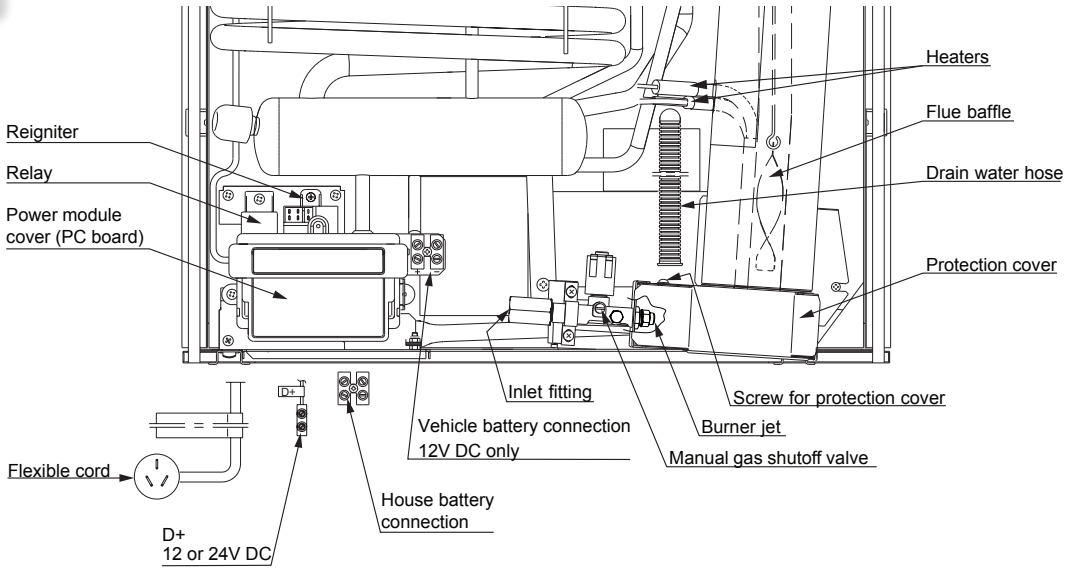

RM 2455 - RM 2555

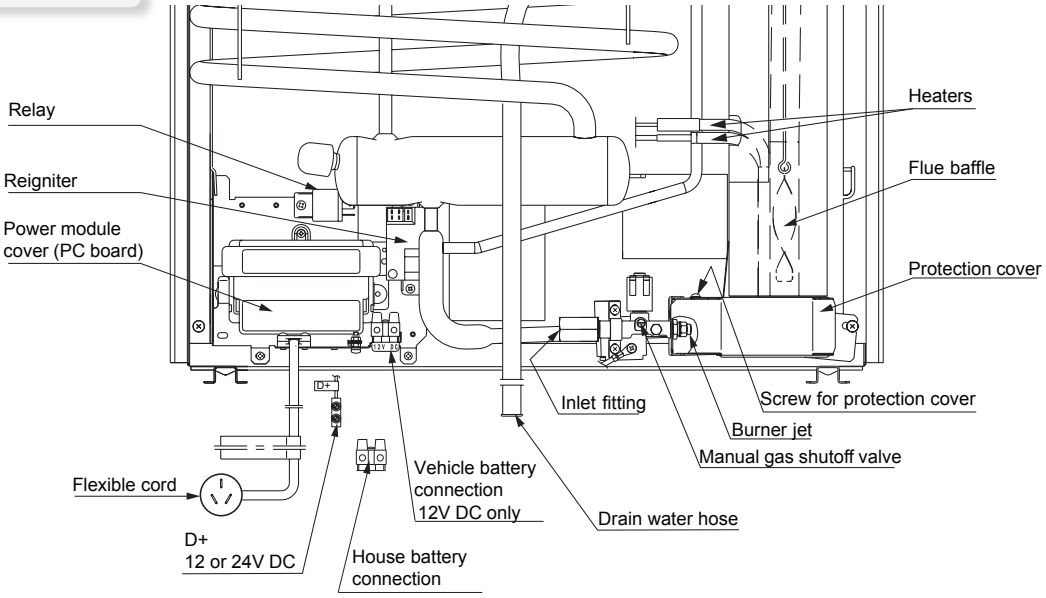

RM 4605

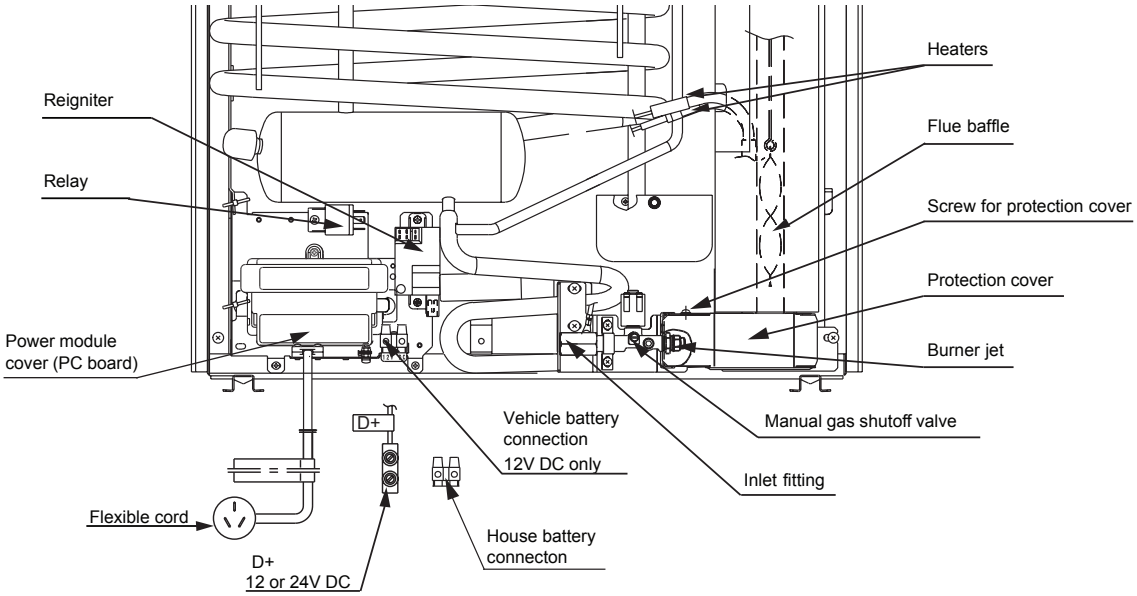

WIRING DIAGRAM

RM 2355

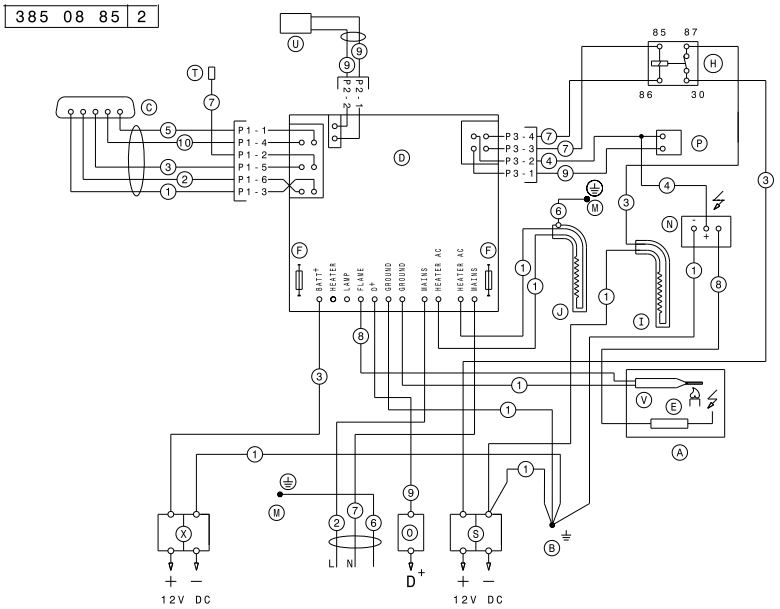

- A — BURNER HOUSING
- B — CHASSIS GROUND
- C — CIRCUIT BOARD DISPLAY
- D — CIRCUIT BOARD POWER
- E — ELECTRODE
- F — FUSE 3A
- H — RELAY
- I — HEATER 12V DC
- J — HEATER 230,240V AC
- M — PROTECTIVE EARTH
- N — REIGNITER
- O — TERMINAL BLOCK
- P — SOLENOID VALVE
- S — TERMINAL BLOCK
- T — TEST POINT
- U — THERMISTOR
- V — THERMOCOUPLE
- X — TERMINAL BLOCK
- 1 — BLACK
- 2 — BROWN
- 3 — RED
- 4 — YELLOW
- 5 — GREEN
- 6 — GREEN/YELLOW
- 7 — BLUE
- 8 — GREY
- 9 — WHITE
- 10 — ORANGE

RM 2455 - RM 2555

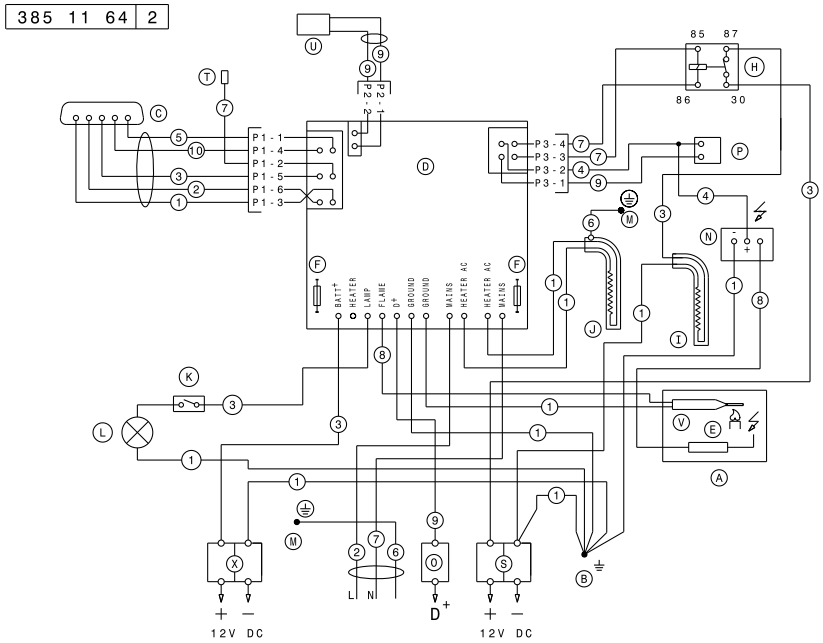

- A — BURNER HOUSING
- B — CHASSIS GROUND
- C — CIRCUIT BOARD DISPLAY
- D — CIRCUIT BOARD POWER
- E — ELECTRODE
- F — FUSE 3A
- H — RELAY
- I — HEATER 12V DC
- J — HEATER 230,240V AC
- K — SWITCH LAMP
- L — LAMP
- M — PROTECTIVE EARTH
- N — REIGNITER
- O — TERMINAL BLOCK
- P — SOLENOID VALVE
- S — TERMINAL BLOCK
- T — TEST POINT
- U — THERMISTOR
- V — THERMOCOUPLE
- X — TERMINAL BLOCK
- 1 — BLACK
- 2 — BROWN
- 3 — RED
- 4 — YELLOW
- 5 — GREEN
- 6 — GREEN/YELLOW
- 7 — BLUE
- 8 — GREY
- 9 — WHITE
- 10 — ORANGE

WIRING DIAGRAM

RM 4605

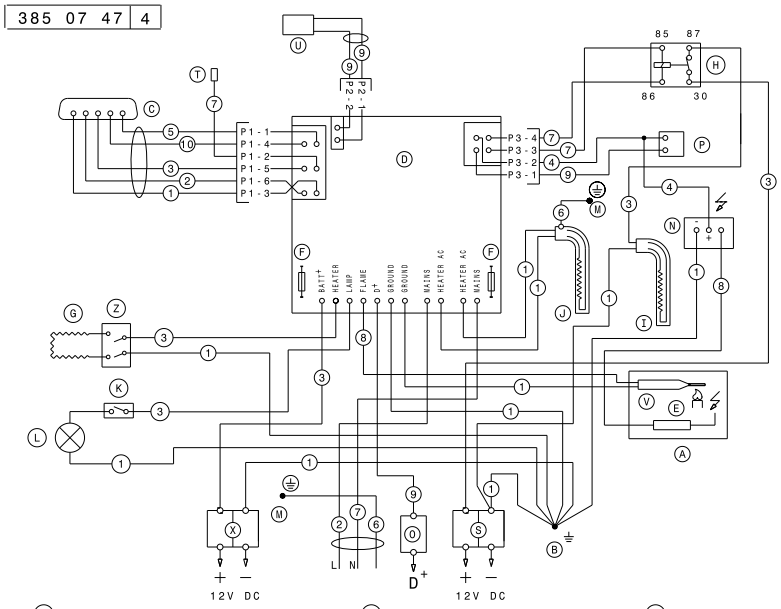

A — BURNER HOUSING	M — PROTECTIVE EARTH	1 — BLACK
B — CHASSIS GROUND	N — REIGNITER	2 — BROWN
C — CIRCUIT BOARD DISPLAY	O — TERMINAL BLOCK	3 — RED
D — CIRCUIT BOARD POWER	P — SOLENOID VALVE	4 — YELLOW
E — ELECTRODE	S — TERMINAL BLOCK	5 — GREEN
F — FUSE 3A	T — TEST POINT	6 — GREEN/YELLOW
G — HEATING CABLE	U — THERMISTOR	7 — BLUE
H — RELAY	V — THERMOCOUPLE	8 — GREY
I — HEATER 12V DC	X — TERMINAL BLOCK	9 — WHITE
J — HEATER 230,240V AC	Z — SWITCH H.C	10 — ORANGE
K — SWITCH LIGHT		
L — LIGHT		

WORKING INSTRUCTIONS FOR THE GAS SAFETY SYSTEM

WORKING DIAGRAM

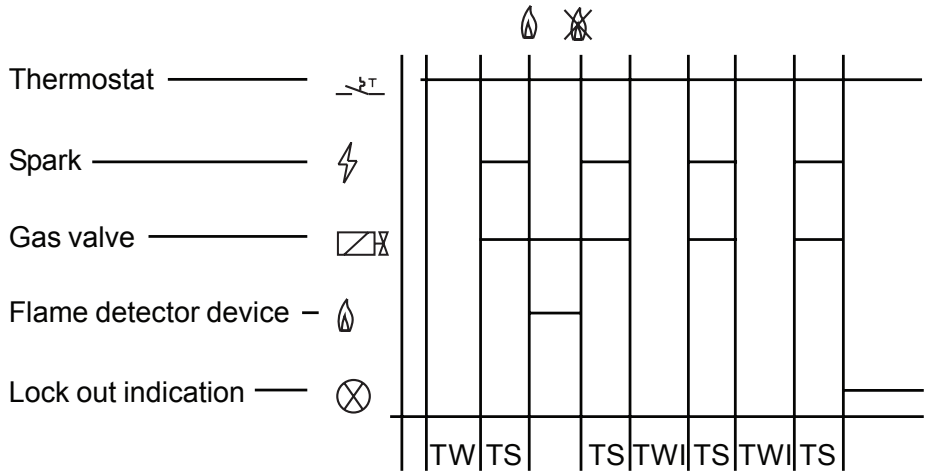

TECHNICAL SPECIFICATIONS

Classification codes according to EN298	A-M-R-V-X-K
Class of protection according to Low Voltage Directive	IP-20
Waiting time / TW	8 s
Safety time / TS	45 s
Inter-waiting time / TWI	120 s
Working temperature	–20°C to +45°C
Nominal working voltage*	12 - 13,8V DC
Resistance to vibration according to	EN60068-2-6:1995

*Functional approved at a voltage variation of +20% through –25%

APPENDIX A - AIRING POSITION CARD

Use the **Airing Position Card** to keep the doors ajar if the refrigerator will not be in use for an extended period of time or put in storage.

RM 2455 AND RM 2555

APPENDIX A - AIRING POSITION CARD

RM 4605

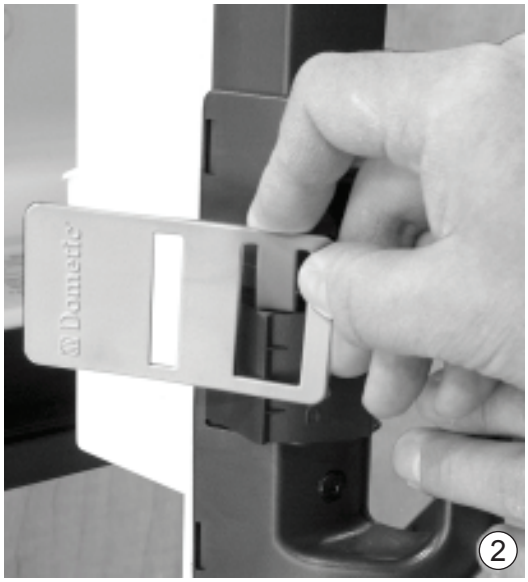

NOTES