Dometic® INSTALLATION AND OPERATING INSTRUCTIONS

REFRIGERATOR FOR LP-GAS AND ELECTRIC OPERATION.

RM 3662, RM 3663 RM 3862, RM 3863
Automatic-Manual Energy Selector

ROYALE

FOR YOUR SAFETY
If you smell gas:
1. Open windows,
2. Don't touch electrical switches.
3. Extinguish any open flame.
4. Immediately call your gas supplier.

FOR YOUR SAFETY
Do not store or use gasollne or other flammable vapors and liquids In the vicinity of this or any other appliance.

Contents:

	Page
Installation	4
Operating Instructions	8
Maintenance & Service	12

WARNING: Improper installation, adjustment, alteration, service or maintenance can cause injury or property damage. Refer to thfs manual. For assistance or additional, Information consult a qualified installer, service agency or the gas supplier.

AVIS

Cet appareil doit être réparé seulement par un réparateur autorisé. Modification de l'appareil pourralt être extremement dangeruse, et pourralt causer mal ou mort.

Dometic®
Our goal . . . your satisfaction.

Corporate Office
2320 Industrial Parkway Elkhart, IN 46515

USA
Service office
The Dometic Corporation
509 South Poplar Street
LaGrange, IN 46761
Phone: 219-463-4858

For Service Center Assistance
Call: 800-544-4881

CANADA
Dometic Distribution Inc.
866 Langs Drive
Cambridge,Ontario
N3H 2N7 Canada
Phone: 519-653-4390

822 70 13-03

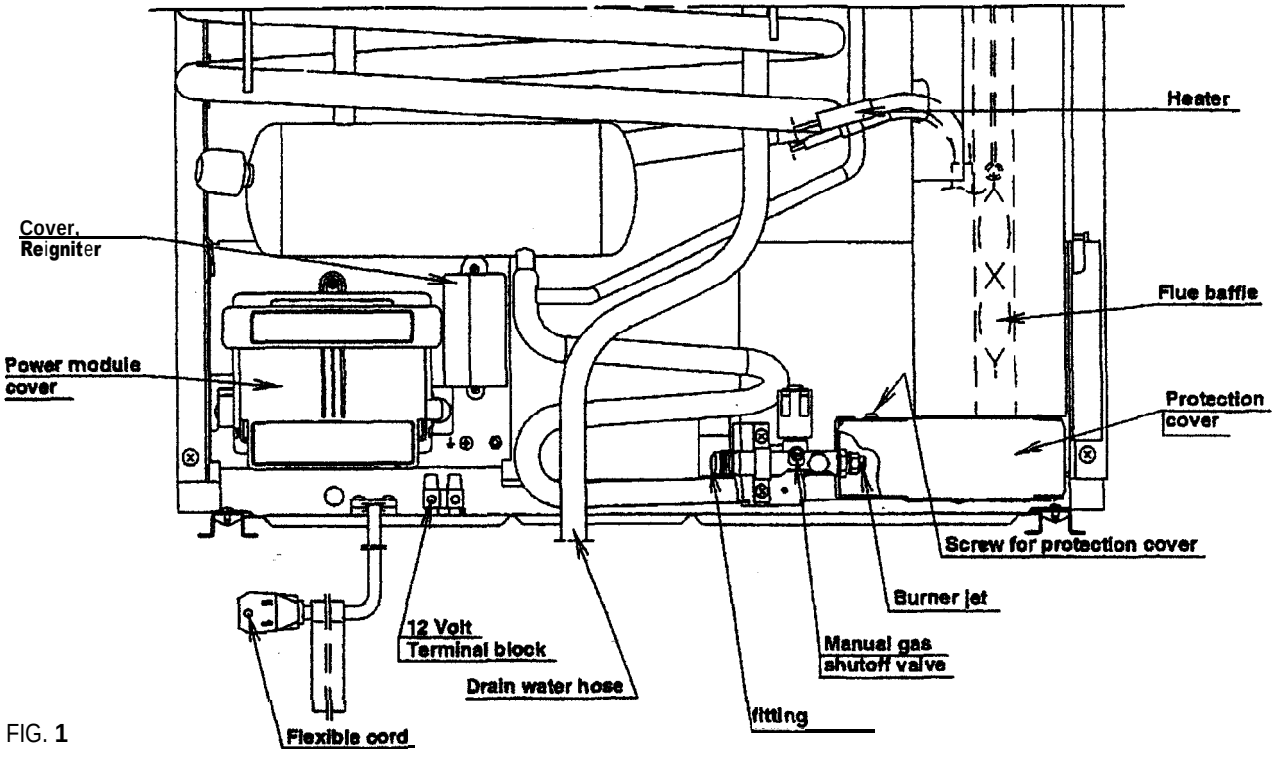

FIG. **1**

2 - WAY display panel.

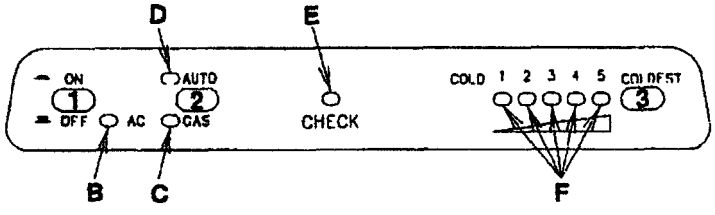

FIG. 2

3 -WAY display panel.

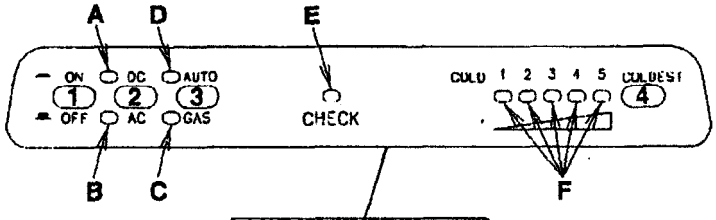

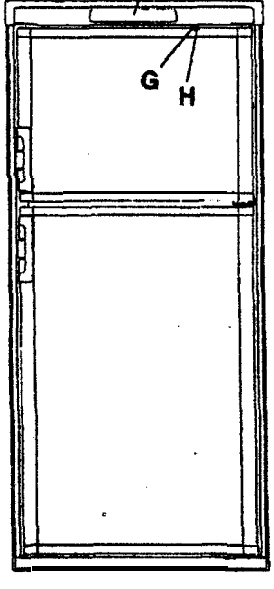

LEGEND P-WAY AMES Model

1. **Main Power Button ON/OFF**
2. **AUTO/GAS** Mode Selector Button
3. Temperature Selector **Button**

B. AC Mode Indicator Lamp
C. GAS Mode Indicator Lamp
D. AUTO Mode Indicator Lamp
E. CHECK Indicator Lamp (GAS Mode Only)
F. Temperature Indicator Lamps

G. **Climate** Control Switch
H. Low Ambient Switch

LEGEND 3-WAY AMES Model

1. Main Power Button ON/OFF
2. DC Mode Selector Button
3. AUTO/GAS Mode Selector Button
4. Temperature Selector Button

A. DC Mode Indicator Lamp
B. AC Mode Indicator Lamp
C. GAS Mode Indicator Lamp
D. AUTO Mode Indicator Lamp
E. CHECK Indicator Lamp (GAS Mode Only)
F. Temperature Indicator Lamps

G. Climate Control Switch
H. Low Ambient Switch

INSTALLATION

GENERAL INSTRUCTION

This appliance is designed for storage of foods and storage of frozen foods and making ice.

The refrigerators outffned herein have been design certified by A.G.A. under the ANSI 221.19 Refrigerator Standard far installation in a mobile home or recreational vehicle and are approved by the Canadian Gas Association.

The certifications are, however contingent on the installation being made In accordance wfth the following instructions as applicable.

In the U.S.A., the **installation must conform with:**

1. National Fuel Gas Code ANSI Z223.1 -(latest edition)
2. Manufactured Home Construction **and** Safety **Standard,** Tftfe 24 CFR, Part 3280.
3. Recreatfonaf Vehides ANSI Al 1 **9.2-(latest edition).**

The unit must be electrically grounded in accordance with the National Electric Code ANSI/NFPA 70-(latest edition) when installed, if an external alternating current electrical source Is utilized.

4. Any applicable focal code.

in CANADA, the Installation must conform with:

1. Current CAN/CGA B149 Gas installation Codes
2. Current CSA Standard 2240.4 GAS-EQUIPPED RECREATIONAL VEHICLES AND MOBI LE HOUSING,
3. Where a flexible metal connector fs used, it must comply with the provisions of the current Standard CAN1-6.10, METAL CONNECTORS FOR GAS APPLIANCES.
4. Any applicable local code

The unit must be electrically grounded in accordance with the current CANADIAN ELECTRICAL CODE C22 Parts 1 and 2.

VENTILATION

The installation shall be made in such a manner as to separate the combustion system from the living space of the mobile home or recreational vehicle. Openings for air supply or for venting of combustion products shall have a mfnimum dimension of not fess than 1/4 inch.

Proper installation requires one lower fresh air intake **and one** upper **exhaust vent. The** ventilation vents shown in this instruction manual have been certified for use with the refrigerator models listed in the table. For "Certified Vent System Kits see page 15. The ventilation kits **must** be installed and used without modification. An opening toward the outside at floor fevef in the refrigerator compartment must be provided for ventifatfon of heavier-than-air fuel gases. The lower vent of the recommended kits is provided with proper size openings. The flow of combustion and ventilating air must not be obstructed.

The lower side vent is fitted wfth a panel which provides an adequate access opening for ready serviceability of the burner and control manifold of the refrigerator.

GAS CONNECTION

Hook-up to the gas supply fine is accomplished at the manual gas valve, which is furnished with a 3/8" SAE (UNF 5/8" -18) male flare connection. Ail completed connections should be checked for feab with soapy water.

! WARNING

DO NOT use a flame to check for gas leaks.

The gas suppfy system must incorporate a pressure regulator to maintain a supply pressure of not more than 11 inches water column.

When testing the gas supply system at test pressures in excess of 1/2 psfg, the refrigerator and fts individual shutoff valve must be disconnected from the gas supply piping system.

When testing the gas supply system at pressures fess than or equal to 1/2 psfg, the appliance must be isolated from the gas supply piping system by **closing** its individual manual shutoff valve.

in case detailed instructions on the installation and connection to the gas supply are required, contact your deafer or distributor.

ELECTRICAL CONNECTION

120 Votts AC Connection

The refrigerator is equipped with a three-prong (grounding) plug for your protection against shock hazards and should be plugged directly into a properly grounded three-prong receptacle. DO NOT cut or remove the grounding prong from this plug. The free length of the cord is 2 feet and therefore recommended that the receptacle be located to **the left** side of the refrigerator (viewed from the rear) and approximately 6 inches from the floor (see FIG. 3). This allows easy access through the vent door. The cord should be routed to avoid direct contact with the burner cover, flue cover or any other components that could damage the cord insulation.

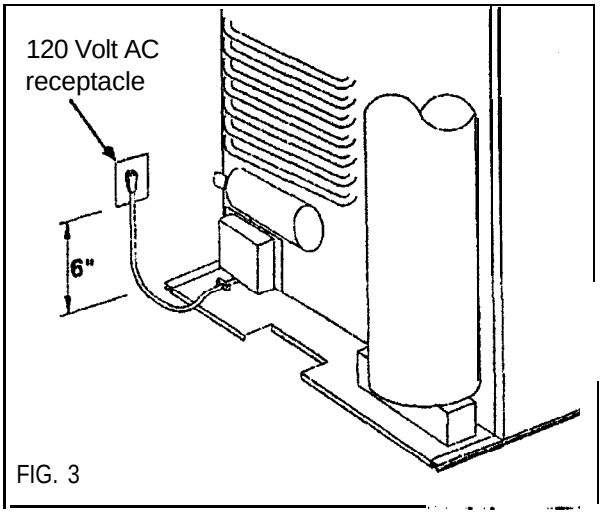

FIG. 3

12 Volts DC Connection

All refrigerator models require a continuous 12 volt DC supply (even though 2-way models are designed to operate on 120 volts AC and gas, a 12 volt DC control is required to maintain the automatic energy system). The DC lead connections are at terminals located at the rear of the refrigerator. (see FIG. 1). One lead is marked **positive (+) and** the other negative (-). Correct polarity must be observed when connecting to the DC supply. Do not use the chassis or vehicle frame as one of the conductors. Connect two wires at the refrigerator and route to the DC supply.

12 Volts DC Connection 3-way models

The distance the current must travel from the battery to the refrigerator dictates the AWG wire size to be used. Should the wire be too small for the distance, a voltage drop will result.
The voltage drop affects the wattage output of the 12 volt cartridge heater and resultant refrigerator performance. Recommended wire sires are shown below.

Maximum total conductor wire length in feet and meters.

	RM 3663, RM3862 2-way	RM3663, RM3863 3-way
	min. wire size	min. wire size
17 ft. 5m	14 AWG	10 AWG
27 ft. 8m	12 AWG	8 AWG

The wires from the battery to the refrigerator must be of large enough size to handle the toad. The connections must be clean, tight and free from corrosion. If not, a resulting voltage drop will cause a decreased cooling capacity.

INSTALLING REFRIGERATOR IN ENCLOSURE

NOTE: **DO NOT install** the appliance directly on carpeting. Carpeting must be removed or **protected by a** metal or **wood** panel beneath the appflanoe whloh extends at least **full width** and depth of the appliance.

NOTE: A wood strip must be **in** place across the upper opening of the enclosure. The top frame of the refrigerator will be anchored to the wood strip with screws, see FIG. 10.

The refrigerator must be installed in a substantial enclosure and must be level. When installing the refrigerator in the enclosure, all areas within the recess in which the refrigerator is installed must be sealed.
Make sure that there is a complete seal between the front frame of the refrigerator and the top, sides and bottom of the enclosure. A length of sealing strip is applied to the rear **surface** of the front frame for this purpose, see FIG. 4.

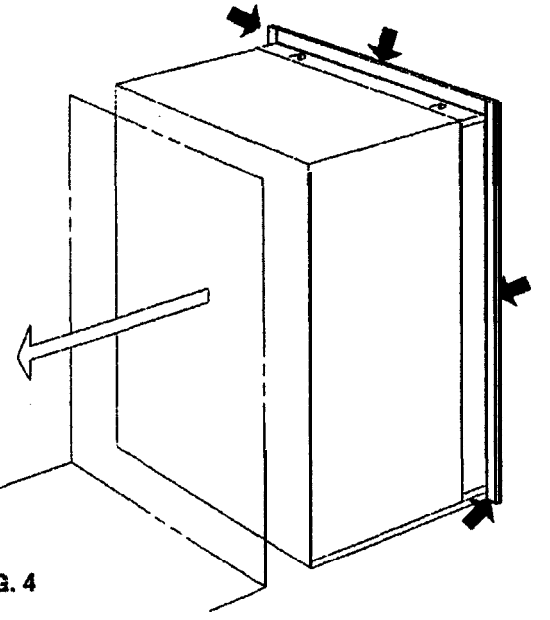

FIG. 4

The seating should provide a complete isolation of the appliance's combustion system from the vehicle interior. NOTE: Be careful not to damage the seating strip when the refrigerator Is put in place.

Securing the Refrigerator

After the refrigerator Is put in place, (ensuring a combustion seal at the front frame), the refrigerator is to be secured in the enclosure with six screws. The screws have to be installed in the following order:

STEP1: Two screws installed through the front base, which includes the lower front strip installation.

The refrigerator is provided with a tower front strip (ship ped as a loose part). The front strip is to be attached after the refrigerator is set into the cut-out opening.

1. Install the lower front strip by sliding it under the bottom hinge plate, as shown in FIG. 5. The hinge **plate can be on** the right or left side depending on the door swing.

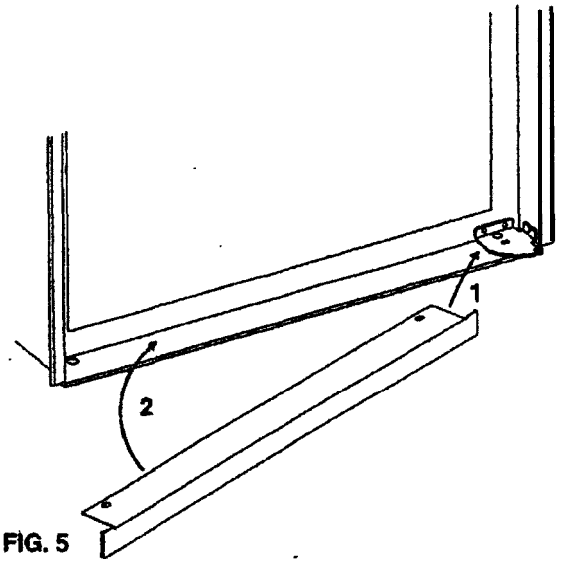

FIG. 5

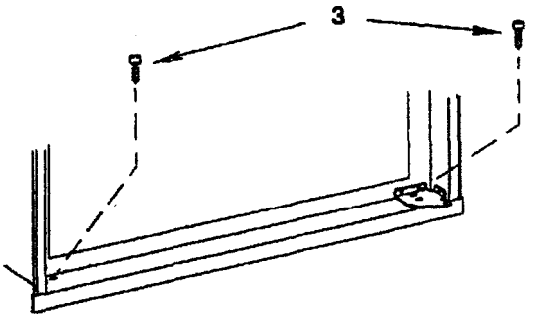

FIG. 6

2. Once the tower front strip is slipped under the hlnge, the part is possible to swing into place as shown in FIG. 6.
3. Secure the refrigerator and the lower front strip with two screws:
   One screw through the hinge, snd on the opposite side one screw through the lower front strip. (FIG. 6).

STEP 2: Two screws Installed **In the** top frame.
The top decoration panel must be removed from the refrigerator before the screws can be installed.
Open the upper door and gently push the tabs out of the hole in the hinge with a flat blade screwdriver, (both sides). See FIG. 7.
Carefully tilt the top decoration panel and lift up to remove from top frame. Be careful not to damage the circuit board and wires.

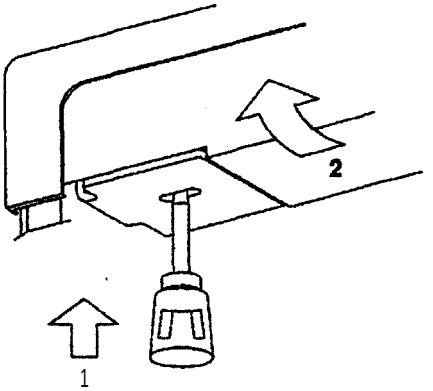

FIG. 7

tnstatt the two screws in the top frame, the holes are accessible from underneath.
Seal the opening for the screws with aluminum tape.
Replace the top decoration panel. Be careful not to pinch the wires behind the panel. Make sure the tabs snap back into the holes in the hinge plate.

STEP 3: Two screws Installed in the rear base.
See FIG. 8.
Failure to follow the sequence In securing refrigerator in enclosure can cause leakage between the frame and cabinet.

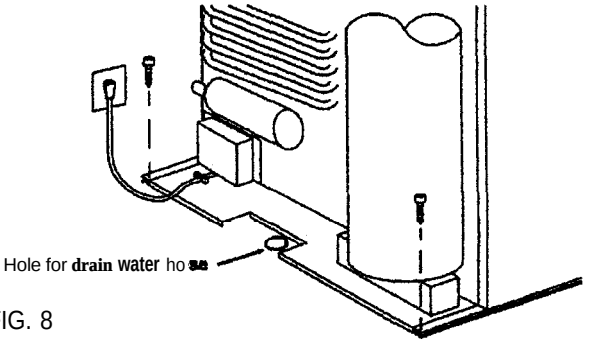

FIG. 8

Any space between the counter, storage area or ceiling and top of the refrigerator greater than 1-1/2 inches should be blocked. The heal produced at the rear of the refrigerator will become trapped in thts space, making the top of the refrigerator hot and reduce the efficiency of the refrigerator.

Drain water hose

A hole must be drilled through flooring see FIG. 8.
The hole must be drilled in the cut out opening of the base plate at the rear of the refrigerator. The installer MUST maks sure that the hose does not kink when run through the floor. Seal around the hose that goes through the drilled hole. If a longer hose than supplied Is required to get the water to drain outside of the vehicle, the installer will have to supply the extra length of hose.

TESTING LP GAS SAFETY SHUTOFF

The gas safety shut-off must be tested after the refrigerator is connected to the LP **gas** supply.
To test the gas safety shut-off, proceed as follows:

1. Start the refrigerator and switch to the GAS mode. (see start up instructions).
2. Check that the gas flame Is lit and the GAS mode Indicator lamp (C) is on.
3. Close the manual gas shut-off valve at the back of the refrigerator. (See FIG. 1).
4. Wait or one minute. The CHECK indicator lamp (E) should be on and the GAS mode indicator lamp (C) should be off.
5. Remove protection cover (see FIG. 1) and open the manual gas shut-off valve. Do not change any button positions on the control panel. Apply a non-corrosive commercial bubble solution to the burner jet orifice.
6. No bubbles should appear at the opening of the burner jet orifice. The presence of bubbles indicates a defective gas safety shut-off and service is required.
7. If no bubbles were present at the burner jet orifice, it should be rinsed with fresh water. Be careful not to damage the burner jet orifice. Replace cover and press the main power ON/OFF button (1) OFF and back ON. Normal operation of the burner should return. Allow the burner to operate for a minimum of five minutes.

CERTIFIED INSTALLATION

Certified installations require one roof vent and one lower side vent.

For *"Certified Vent System Kits" see page* 15.

For further information contact your dealer or distributor.

NOTE: The upper vent should be centered over the condenser coil at the beck of the refrigerator.

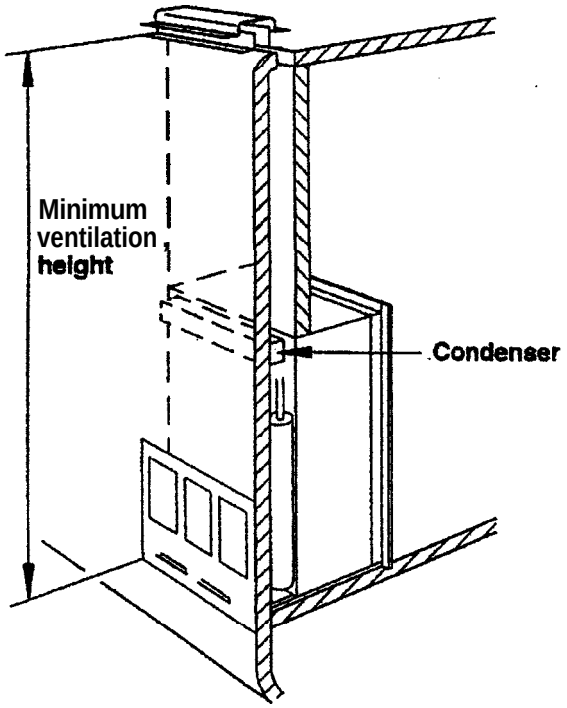

FIG. 9

METHODS OF INSTALLATION

The method of installation is shown in FIG. 9. It is essential that all maximum or minimum dimensions are strictly maintained as the performance of the refrigerator is dependent on adequate flow of air over the rear of the refrigerator,

VENTILATION HEIGHTS

Installation with roof vent and tower side vent	Minimum ventilation heights in	
Refrigerator	Inches	mm
RM3662, RM 3663	57-3/4	1465
RM 3662; RM 3963	63-3/4	1620

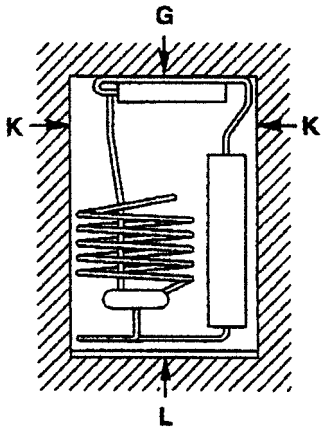

FIG. 10

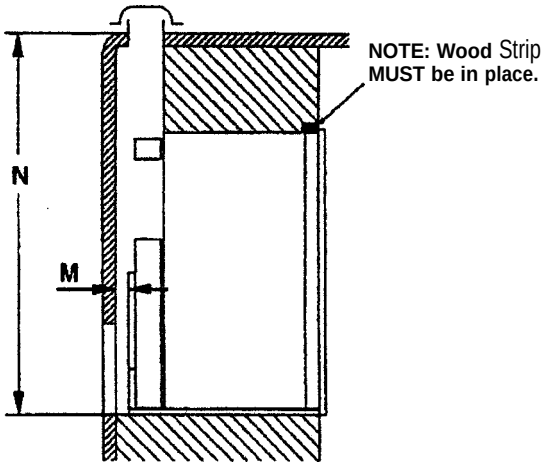

CLEARANCE%

Minimum clearances In inches to combustible materials are:

G: Top 0
K: Slde 0
L: Bottom 0
M: Rear 0
N: See NOTE: Clearance 'N' below.

NOTE: Clearance "M" is between the rearmost part of the refrigerator and the wall behind the refrigerator.

NOTE: Clearance " N" is the distance between the bottom of the lower vent to the roof material. For ventilation height, see table VENTILATION HEIGHTS
See Figures 9, and 10.

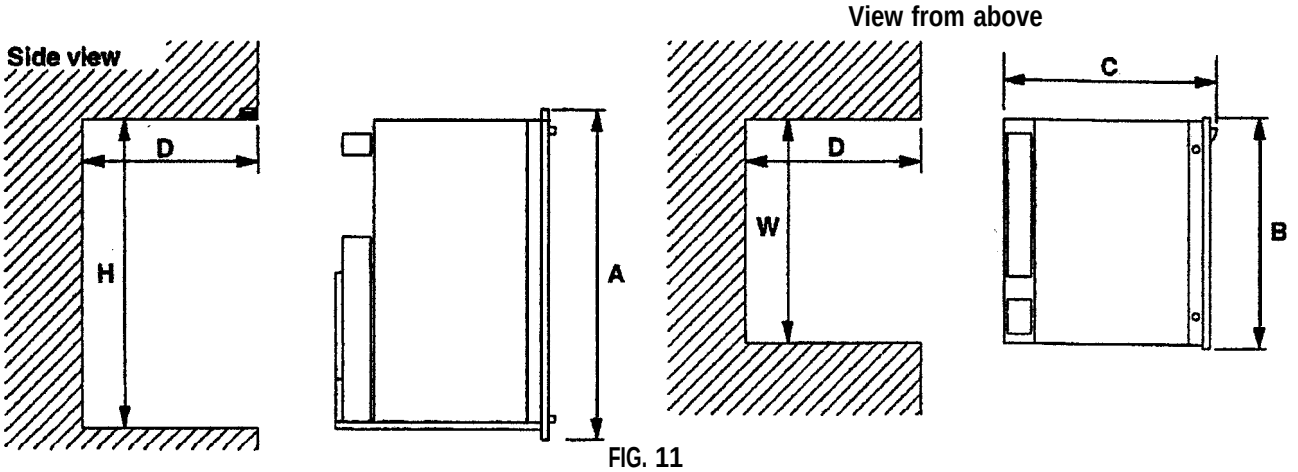

FIG. 11

Refrigerator Model	Overall Dimensions			Recess Dimensions		
	Height A	Width B	Depth C	Height H	Width W	Depth D
RM 3662 inch RM a663	54-21/32	24-7/8	26-1/32	53-3/4	23-11/16	2 4
mm	1366	632	681	1365	602	810
RM 3662 inch RM 3663	60-51/64	24-7/8	26-1/32	59-15/16	23-11/16	24
mm	1544	632	661	1622	602	610

This method of installation and these clearances will give you adequate space **for service and** proper **installation.**

OPERATING INSTRUCTIONS

IMPORTANCE OF LEVELING A REFRIGERATOR

In an absorption refrigerator system, ammonia is liquefied in the finned condenser coil at the top rear of the refrigerator. The liquid ammonia then flows into the evaporator (inside the freezer section) and is exposed to a circulating flow of hydrogen gas, which causes the ammonia to evaporate, creating **a cold condition in the freezer.**

The tubing **in the evaporator section** is **specifically sloped to provide** a **continuous** movement of liquid **ammonia**, flowing downward **by gravity through this section. If the refrigerator is operated when it is not level and the vehicle** is **not moving, liquid ammonia** will **accumulate** in sections of the evaporator tubing. This will stow the circulation of hydrogen and ammonia gas, or in severe cases, **completely block it resulting in a loss of cooling.** Any time the vehicle is parked for several hours with the refrigerator operating, the vehicle should be leveled to prevent this loss of cooling. The vehicle needs to be leveled only so It Is comfortable to live in (no noticeable 'sloping of floor or walls).

When the vehicle is moving, the leveling is not critical, as the rolling and pitching movement of the vehicle will pass to either side of level, keeping the liquid ammonia from accumulating In the evaporator tubing.

OPERATION

Before starting the refrigerator, check that all the manual **gas valves are in the ON position.** DO NOT forget the manual shut-off valve on the rear of the refrigerator, see **FIG.** 1.

This refrigerator Is equipped with **a** semi Automatic Energy Selector (AMES) control system, **which can be set to automatically select either** 120 volt AC or LP gas operation, or if desired LP gas only. On 3-way models the **control system can manually be set to**DC operation, The **refrigerator controls will work down to 9.6 volt**DC.

! WARNING

Most LP gas appliances used-in recreational vehicles are vented to the outside of the vehicle, When parked close to a gasoline pump, it Is possible that the gasoline fumes could enter this type of appliance and ignite from the burner flame, CAUSING A FIRE OR AN EXPLOSION.

FOR YOUR SAFETY, when refueling, shut of all LP gas appliances which are vented to the outside.

2 · WAY display panel.

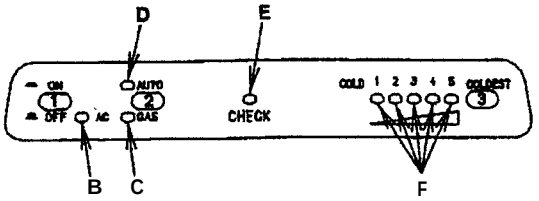

3 -WAY display panel.

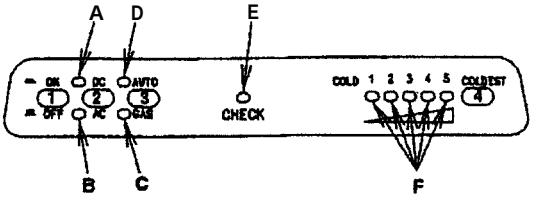

START UP INSTRUCTIONS

A. A continuous 12 volt DC supply must be available for the electronic control to function.

B. Press the main power ON/OFF button (1) to the DOWN position.

C. Press the TEMPERATURE SELECTOR button (3) P-WAY Model or (4) 3-WAY Model until the lamp at the desired setting is Illuminated.

2-WAY MODEL

AUTO MODE

1. Press the AUTO/GAS mode selector button (2) to turn ON the Auto lamp (D). If 120 volts AC is availab-le, the AC mode indor lamp (B) will illuminate indicating AC operation. If 120 volts AC is not avail-abie, the GAS mode indicator tamp (C) will illuminate and the control system will automatically switch to GAS operation.
2. If the CHECK indicator lamp (E) illuminates and the GAS mode indicator lamp (C) is off, the controls have failed to ignite the burner in the GAS mode. GAS operation may be reset by pressing the main power ON/OFF button(I) to the OFF then ON position. (See step 2 under GAS MODE).
3. Press the TEMPERATURE SELECTOR button (3) until the lamp at the desired position is iiiuminated.

GAS MODE

1. Press the AUTO/GAS mode selector button (2) to turn OFF the Auto lamp (D). The GAS mode indicator lamp (C)will illuminate. Within 45 seconds the burner should be ignited and operating normaiiy.
2. On the initial refrigerator start-up, it may take longer than 46 seconds to allow air to be purged from the gas tine. if the gas does not ignite within 45 seconds the CHECK indicator lamp (E) will illuminate and the GAS mode indicator lamp (C) will go off. To reset when the CHECK indicator lamp (E) is iiiuminated, press the main power ON/OFF button (1) to the OFF and then ON position.
   NOTE: Do not continue to reset GAS operation if the CHECK indicator lamp continues to be illuminated after several tries.
3. Press the TEMPERATURE SELECTOR button (3) **until** the lamp at the desired position is iiiurnlnated.

TO SHUT OFF THE REFRIGERATOR

The refrigerator may be shut off while in any mode of operation by pressing the main power ON/OFF button to the UP (OFF) position. This shuts off ail DC power to the refrigerator..inciudinc the interior iiaht.

3-WAY MODEL

AUTO MODE

1. Press the DC mode selector button (2) to turn OFF the DC lamp (A).
2. Press the AUTO/GAS mode selector button (3) (ii required) to turn ON the Auto lamp (D). If 120 volts AC is available, the AC mode Indicator lamp (B) will illuminate indicating AC operation. If 120 volts AC is not avaiiabie, the GAS mode indicator lamp (C) will illuminate and the control system will automatically switch to GAS operation.
3. if the CHECK indicator lamp (E) illuminates and the GAS mode indicator lamp (C) is off, the controls have failed to ignite the burner in the GAS mode. GAS operation may be reset by pressing the main power ON/OFF button (1) to the OFF then ON position. (See step 2 under GAS MODE).
4. Press the TEMPERATURE SELECTOR button (4) until the lamp at the desired position is iiiuminated.

GAS MODE

1. Press the DC mode selector button (2) (if required) to turn OFF the DC lamp (A).
2. Press the AUTO/GAS mode selector button (3) to turn OFF the Auto lamp (D). The GAS mode indicator lamp (C) will illuminate. Within 45 **seconds the** burner should be ignited and operating normally.
3. On the initial refrigerator start-up, it may take longer then 45 seconds to allow air to be purged from the gas line. if the gas does not ignite within 45 seconds the CHECK indicator lamp (E) will illuminate and the GAS mode indicator lamp (C) will go off. To reset when the CHECK indicator lamp (E) is illuminated, press the main power ON/OFF button (1) to the OFF and then ON position,
   NOTE: Do not continue to reset GAS operation If the CHECK indicator lamp continues to be illuminated after several tries.
4. Press the TEMPERATURE SELECTOR button (4) until the lamp at the desired position is illuminated.

DC MODE

1. **Press the OC** mode indicator button (2) to turn ON the DC lamp (A).
2. Press the TEMPERATURE SELECTOR button (4) until the lamp at the desired position is illuminated.

2 - WAY display panel.

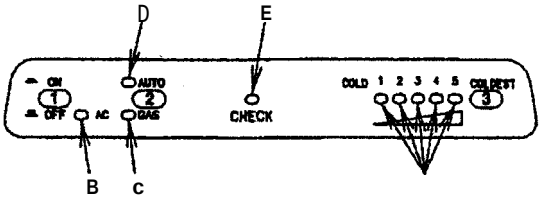

3 -WAY **display panel.**

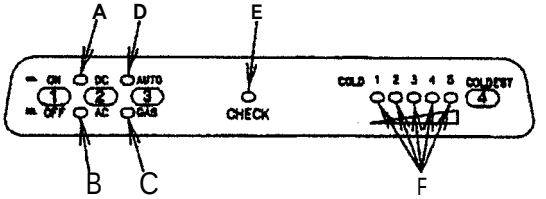

DESCRIPTION OF OPERATING MODES

THERMOSTAT

The **thermostat on the refrigerator controls both the gas and electric** operation, thereby eliminating the necessity of resetting each time a different energy source is employed.

After the initial start-up, the thermostat should be moved from 'COLDEST' to the desired temperature setting, usually about mid setting.

AUTO MODE

When operating in the AUTO mode, the AUTO mode indicator lamp (D) will illuminate. The control system will automatically select between AC and GAS operation wlth AC having priority over GAS. Either the AC indicator lamp (B) or the GAS indicator lamp (C) will illuminate depending on the energy source selected by the control system. If the control system is operating with AC energy and it then becomes unavailable , the system will automatically switch to GAS. As soon as AC becomes available again the control will switch back to AC regardless of the status of GAS operation.

GAS MODE

When operating in the GAS mode the AUTO mode indicator lamp (D) will be off and the GAS mode indicator lamp (C) will be illuminated. This mode provides LP gas operation only. The control system will activate the ignition system and will attempt to light the burner for a period of approximately 45 seconds. If unsuccessful, the CHECK indicator lamp (E) will illuminate and the GAS mode indicator lamp (C) will turn off.

To restart GAS operation, press the main power ON/OFF button (1) to the OFF and then ON position. The control system will attempt a new 45 second ignition sequence.

If the refrigerator has not been used for a tong time or the LP tanks have just been refilled, air may. be trapped in the supply lines. To purge the air from the lines may require resetting the main power ON/OFF button (1) three or four times. If repeated attempts fail to start the LP gas operation, check to make sure that the LP gas supply tanks are not empty and all manual shutoff valves in the lines are open. If the problem is still not corrected, contact a service center for assistance.

If the control is switched to AC or DC (3-way models only) operation while the CHECK indicator lamp is on, it will function properly, but the CHECK Indicator **lamp** will not go off until the main power ON/OFF button is pressed to the OFF then ON position.

DC.MODE (3-way models only)

When operating In the DC **mode the** DC mode indicator tamp **(A)** will be illuminated. All other mode lamps will be off. The DC mode overrides all other operating modes. If one of the other operating modes is desired, the DC selector button (2) must be pressed to turn OFF the DC lamp (A).

IMPORTANT:

To prevent the refrigerator from being left on and draining the battery when **the vehicle' s engine Is not running and charging the battery. It It recommended that an automatk** cut-out relay be **Installed** between the battery **and the refrigerator toggle switch so that the refrigerator will not draw current when the Ignition of the vehicle is switched off. Alternatively, a suitable plug and** receptacle should be installed In the 12 Volt supply line, so **that** the refrigerator **can be** disconnected from the supply, as necessary.

LIMP MODE OF OPERATION

This control system contains a feature where It will continue to operate the cooling system in the event of a failure of **a** major operating component. Two different modes of operation can occur in this category.

If for some reason the display module becomes non functional, the control system will revert to full automatic operation selecting the best energy source available with AC, DC (3-way only) and GAS priority. The temperature of the refrigerator will be maintained at the MID position within normal temperature tolerances. The power module will continually attempt to reestablish operation of the display module.

The second limp mode of operation will execute when a failure of the temperature sensing device or associated electronic circuitry occurs. If thls should occur, the control system will operate on the energy source selected via the control panel. The cooling unit will run continuously on the selected energy source. The refrigerator will continue to operate in this mode Indefinitely or until a new sensor is installed and the system is reset.

HOW TO USE THE REFRIGERATOR

FOOD STORAGE COMPARTMENT

The food storage compartment is completely closed and unventilated, which is necessary to maintain the required low temperature for food storage. Consequently, foods having a strong odor or those that absorb odors easily should be covered. Vegetables, salads etc. should be covered to retain their crispness. The coldest positions in the refrigerator are under the coaling fins and at the bottom of ths refrigerator. The Warmer areas are on the upper door shelves. This should be considered when placing different types of food in the refrigerator.

FROZEN FOOD STORAGE COMPARTMENT

Quick frozen soft fruits and ice cream should be placed in the coldest part of the compartment which is at the bottom of the aluminum liner. Frozen vegetables, may be stored In *any* **part of the** compartment.

This compartment is not designed for deep or quick **freezing of** food. **Meat** or Rsh, whether raw or prepared, **can be stored in the frozen food storage** compartment provided they are pm-cooled Rrst in **the** refrigerator. They can be stored about three times longer in the frozen food compartment as compared to the fresh food compartment. To prevent food from drying out, keep it in covered dishes, containers, plastic bags or wrapped in aiuminum foil.

Ice cubes can **be made** in the freezer compartment.

For **faster** ice making, the trays should be placed in direct contact with the bottom of the freezer compartment.

Ice will be made more rapidly if the thermostat is set at ifs Mghest position.

It is a good idea to do this a few hours before the anticipated need for ice, but be sure to move back to normal setting, usually about mid setting when the ice is formed. Food in the lower compartment may be frozen if the setting is left on "COLDEST' position.

Refrigerator volume

The combined volume of the freezer and fresh food compartments are 6 cu. ft. for the models RM 3662 and RM 3663 and 6 cu. ft. for the models RM 3662, and RM 3863.

DEFROSTING

Shut off the refrigerator by pressing the main power ON/OFF button to the UP (OFF) position. Empty the refrigerator, leaving the drip tray under the finned evaporator, and the cabinet and freezer doors open. Defrosting time can be reduced by filling the ice trays with hot water and placing them in the freezer compartment.

! CAUTION

DO NOT use **a hot** alr **Mower.** Permanent **damage could result from warping the metal or plastic** parts; DO NOT use **a knife or an Ice pick, or other sharp tools to remove frost from the freezer compartment** They can create a **leak in the ammonia system.**

When **all frost** is melted, dry the interior of the refrigerator with a clean cloth. Replace all food and set the thermostat to the COLDEST temperature setting for **a few** hours. Then reset the thermostat to the desired sefflng, usually at mid setting.

CLEANING

Cleaning the refrigerator is usually done after it is defrosted or put into storage. To dean the interior liner of the refrigerator, use lukewarm weak soda solution. Use only warm water to clean the Rnned evaporator, ice trays and shelves. NEVER use strong chemicals or abrasives to clean these parts as the protective surfaces will be damaged. It Is important to always keep the refrigerator clean.

SHUT OFF - STORAGE PROCEDURE

Shut off the refrigerator by pressing the main power ON/OFF button to the UP (OFF) position,

If the refrigerator will not be in operation for a period of weeks, it should be emptied, defrosted, cleaned and the doors left ajar. The ice trays should also be dried and kept outside the cabinet.

! WARNING

DO NOT store explosive substances in the refrigerator, such as cigarette lighter gas, petrol, **ether or the like.**

CLIMATE CONTROL HEATER

During the summer months of high temperatures and humidity, the metal frame between the freezer and fresh food compartments may have water droplets forming. The number of water droplets will increase if the vehicle isn't air conditioned during these months.

This refrigerator comes standard with **a** 12 volt (DC) climate control that will evaporate the water droplets when they form.

To have the climate control on, you position the switch ("G" see figure 2) located beneath the top decoration panel that houses the control panel to ON. The climate control can be left on continuously or only used when temperatures require it.

NOTE: The climate control will draw 12 volts DC power continuously when in the ON **position. It should ba** turned OFF when a charging source is not available.

LOW AMBIENT SWITCH

All RV absorption refrigerators, while similar, operate a little **differently than** your home refrigerator. Dometic designers and engineers have equipped **your refrigerator** with an exclusive feature that allows for trouble-free operation In low ambient temperature (like below **50°F)** for extended periods of time. Simply turn on the low ambient switch located beneath the top decoration panel that houses the control panel (see figure 2, " H"). Once the outdoor temperature is above **50°F,** the low ambient switch should be turned off.

GAS EQUIPMENT ASSEMBLY

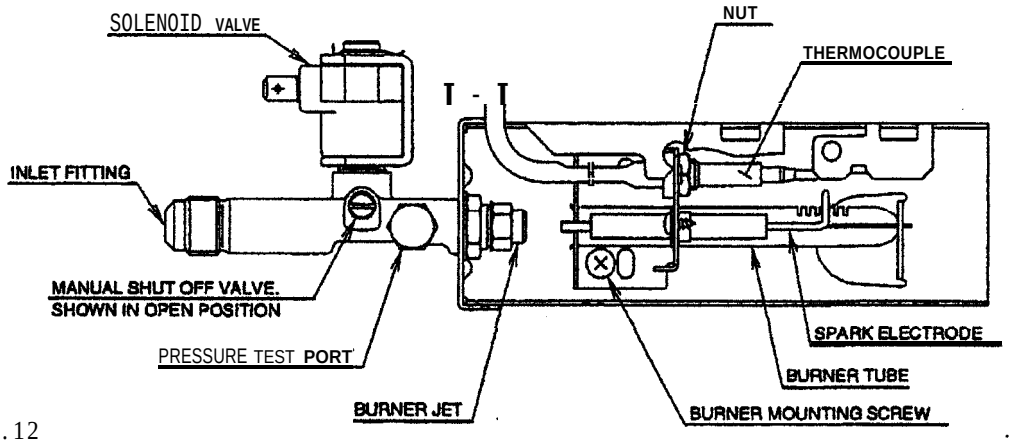

FIG.12

ELECTRIC EQUIPMENT

CARTRIDGE HEATER

The heat necessary for the operation of an absorption cooling unit is supplied by an electric heater mounted In a pocket of the boiler system.
The 3-WAY Model Is equipped with two electrical heaters, one for 120 volt AC and one for 12 volt DC.
The P-WAY Model is equipped with one electric heater 120 volt AC.
To replace the heater proceed as follows;

1. Disconnect the wall plug, and the 12 volt wires.
2. Remove the power module cover see FIG. 1
3. Disconnect the heater leads.
4. With a pair of pliers unfold the lug holding the lid of the boiler casing and open the lid.
5. Remove some insulation wool so that the heater is aocessible.
6. Turn and lift the heater out of its pocket.
7. Fit the new heater into the pocket.
8. Connect the leads and put on the power module cover.
9. Reset the Insulation and close the lid of the boiler.

FUSES

The 2-way AMES models **are** equipped with 2 fuses, one for **the** refrigerator control system and one for the AC cartridge heater.
The 3-way AMES models are equipped with **a** third fuse for the DC cartridge heater. (see table below)
To replace fuse(s) proceed as foilows.

1. Disconnect the wall plug, and the 12 volt wires.
2. **Remove** the power module cover. See FIG. 1.
3. Snap the fuse out of the fuse holder.
4. Fit a new fuse in to the fuse holder.
5. Replace the power module cover.

Control system	3 Amp
AC heater	5 Amp
DC heater	35 Amp

MAINTENANCE & SERVICE

The user should bs aware of service that must be done on a regular schedule to keep the refrigerator operating properly. The service should only be performed by a qualified technician who is familiar with LP gas systems and refrigerators.

1. REFRIGERATOR REMOVAL

Before working on the refrigerator, make sure the AC voltage and DC voltage leads are diited. Shut off the gas supply. Disconnect the gas supply lii at the rear of the refrigerator, see FIG. 1. Always use a back up wrench **when** loosening and tightening this connection. Cap the gas supply line, loosen the screws anchoring the refrigerator to the enclosure **and slide the refrigerator out of the compartment.**
When replacing the refrigerator make sure that the sealing strips are property positioned.
Replacement is the reverse of removal. Check all connections for gas leaks.
Refer to section INSTALLATION, page 4 to 6.

2. PERIODIC MAINTENANCE

To keep your Dometic refrigerator operating efficiently and safely, periodic inspectlon and cleaning of several components once or twice a year is recommended.

A. It is important to keep the area at the back of the refrigerator clean. Check the lower vent, upper vent and area between these openings for any obstructions such as bird/insect nests, spider webs, etc. Clean the coils on the back of the refrigerator. Use a soft bristled brush to dust off the coils.
It is Important to keep the refrigerator area free from combustible material, gasoline and other flammable vapors or liquids.

NOTE: The following maintenance is required once or twice a year, but should only be done by a qualified serviceman who is familiar with LP gas systems and refrigerators.

B. Check all connections in the LP gas system (at the back of the refrigerator) for gas leaks. The LP gas supply must be turned on. Apply a non-corrosive bubble solution **to all LP gas** connections. The appearance of bubbles indicates a leak end should be repaired immediately by a QUALIFIED SERVICEMAN WHO IS FAMILIAR WITH GAS SYSTEM AND REFRIGERATORS.

! WARNING

DO NOT use a flame to check for gas leaks.

C. Check the AMES *control system by* connecting/disconnecting 120 volt AC power, start/stop the engine, etc. Compare the operation with the operation described in description of operating modes. Page 10.

D. The LP gas pressure should be checked and the main regulator m-adjusted if pressure is incorrect. The correct operating pressure is 11 inches of water column. The correct place to take the LP gas pressure is at the test port just ahead of the burner jet. (See FIG. 12).

E. Inspect the flue baffle. It should be reasonably clean and free of soot. Heavy soot formation indicates Improper functioning of the burner. The flue and burner both require cleaning in the following manner.

1. Unplug the refrigerator power cord from the 120 volt AC outlet. (See FIG. 3).
2. Disconnect or shut off the 12 volt power to the refrigerator.
3. Turn manual shutoff valve to OFF. (See FIG. 1).
4. Remove cover from the bumer housing. (See FIG. 1).
5. Disconnect the wire from the high voltage electrode.
6. Remove the burner mounting screw end remove the burner assembly. (See FIG. 12).
7. Remove the wire and flue baffle from the top of flue tube. Clean the flue from the top using a flue brush. Blowing compressed air into the flue will not properly clean soot and scale out of the flue tube. Replace the flue baffle.
8. Clean burner tube with a brush. Blow out burner with compressed air.
9. Before removing burner jet, clean burner area of soot and scale that **fell** out of flue tube. Remove the bumer jet. Soak the- jet in wood alcohol and Mow it out with compressed air. Re-install and tighten burner jet NOTE: The color of the flame shall be clear blue over the slots of the burner. (See FIG. 13).

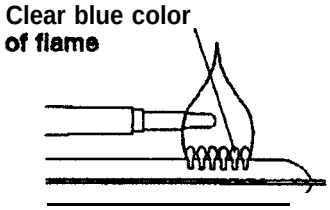

FIG. 13

! WARNING

DO NOT use a wire or pin when cleaning the burner jet as damage can **occur to the precision opening. This can cause damage to the refrigerator or create a fire hazard.**

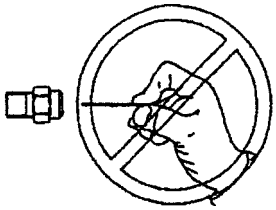

10. Reinstall burner, being careful that the end of the burner fits into the slot on the burner bracket. Check to make sure slots are centered under the flue tube and the thermocouple is positioned properly (tip of thermocouple extends over two slots of burner).
11. Se sure to reconnect the wire to high voltage electrode. Check the electrode for proper location and gap. (See FIG. 14).

FIG. 14

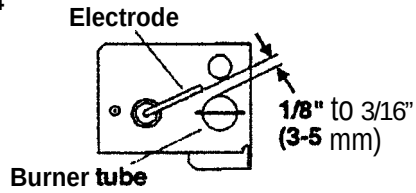

12. Turn on manual gas shutoff valve and check all fittings for leaks.
13. Connect 120 volt power cord to the outlet and reconnect or turn on the 12 volt DC power.
14. Check LP gas safety shutoff. See pege 8.

TROUBLESHOOTING

The Refrigerator Does Not Cool Properly

A. Burner jet clogged.
Clean. (See section Maintenance & Service, Item 2. Periodic Maintenance, Paragraph E. Item I-14.

B. Check level of refrigerator.

C. Venting problem.
Restriction in air flow across cooling unit

D. Heavy frost buildup on evaporator fins.
Defrost.

E. Flue baffle not inserted properly in flue tube.

F. Improperly set thermostat.
See section Operating Instructions, part Start Up Instructions.

G. Burner dirty.
Clean. See section Maintenance & Service, Item 2. Periodic Maintenance, Paragraph E. Item I-14.

H. LP gas pressure low at burner.
Set main regulator so pressure does not drop below 11 inches water column at pressure tap.

I. Burner not located properly under flue tube.
Relocate.

J Burner damaged.
Replace.

K. Odors from fumes.
1. Dislocated burner.
2. Damaged burner.
3. Dirty flue tube.

L. FUSES
1. Refrigerator AC Supply.
2. Refrigerator DC Supply
3. Control system. See page 12, part Fuses.

NOTE: AVOID SPRAYING WATER THROUGH THE REFRIGERATOR VENTS WHILE WASHING YOUR RV.

All the above instructions are to be followed closely. The refrigerator is quality-guaranteed. However, we are not responsible for any failures caused by improper adjustments and unfavorable installation conditions. Contact service point or distributor service dept. for assistance.

CHANGING DOOR HINGES FROM ONE SIDE TO THE OTHER

The refrigerator is equipped with convertible doors. To change the door swing, consult the parts manual for the Conversion Kit Number. For further information, please contact the Dometic Corporation listed on the front page.

INSTRUCTIONS FOR MOUNTING THE DOOR PANEL

The refrigerator is normally delivered without door panels. Before starting the mounting work, check that the panel dimensions are in compliance with those given in the table and the instructions are read thoroughly.
When mounting the panel, proceed as follows:
See figure page 15.

A. Open the door 90 degrees.
On new refrigerators, the decoration strips are taped inside the door; if installed on the door, remove the door decoration strip (2) by removing its three screws (1).
B. Insert the vertical edges into the grooves of the door frame (3).
C. Push the panel downward so that the lower horizontal edge of the panel (4) is fitted into the bottom groove (5).
D. Put the decoration strip across the door so that the gap is covered. Secure the decoration strip with the three screws removed in Step A (1).

PANEL DIMENSIONS
MAX. THICKNESS 5/32" (4 mm)

REFR.MODELS TYPE		HEIGHT MAX.	HEIGHT MIN.	WIDTH MAX.	WIDTH MIN.
RM 3662 RM 3663					
upper	mm	403	401	527	524
	inch	15-27/32	15-25/32	20-3/4	20-5/8
lower	mm	827	825	527	524
	inch	32-9/16	32-1/2	20-3/4	20-5/8
RM 3862 RM 3863					
upper	mm	403	401	527	524
	inch	15-27/32	15-25/32	20-3/4	20-5/8
lower	mm	983	981	527	524
	inch	38-11/16	38-5/8	20-3/4	20-5/8

SPARE PARTS

The following list is a list of commonly used parts which should be available, if required, from your Dometic Service Center.

A = RM 3662; B = RM 3663;
C = RM 3862; D = RM 3863.

Part No.					Description
200 74 19-21/7	A	B	C	D	Jet, No.58
293 06 97-07/9	A	B	C	D	Burner with conductor
293 27 81-01/2	A	B	C	D	Electrode
293 26 67-03/9	A	B	-	-	Baffle
293 26 67-04/7	-	-	C	D	Baffle
293 11 32-01/9	A	B	C	D	Spark ignition device
17 37 42-28/9	A	B	C	D	Heater, 325W, 115V
17 37 57-08/9	-	B	-	D	Heater, 215W, 12V
293 20 52-01/8	A	B	C	D	Thermocouple
293 25 76-02/4	A	B	-	-	Door shelf, 2 pieces
293 25 76-02/4	-	-	C	D	Door shelf, 3 pieces
293 25 75-02/6	A	B	C	D	Door shelf, lower
293 26 21-02/8	A	B	C	D	Box vegetable-
293 21 06-01/2	A	B	C	D	Lamp cover
293 20 93-01/2	A	B	C	D	Handle
293 27 50-04/1	A	B	C	D	Door reversing kit, right-left
293 27 50-05/8	A	B	C	D	Door reversing kit, left-right

Contact an authorized service center for parts and repairs as needed

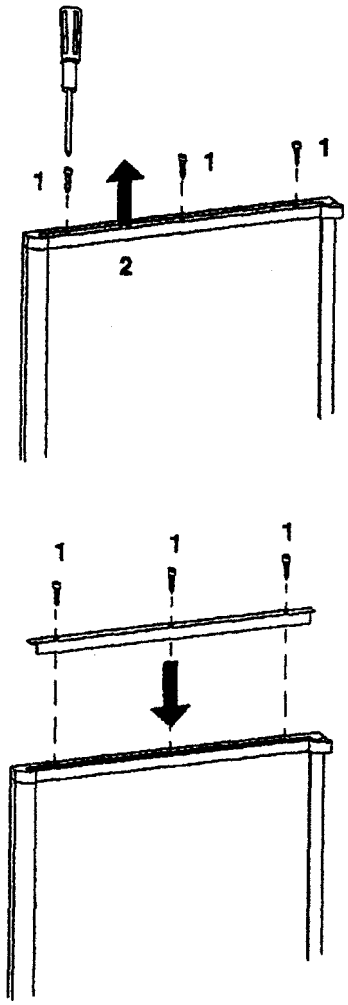

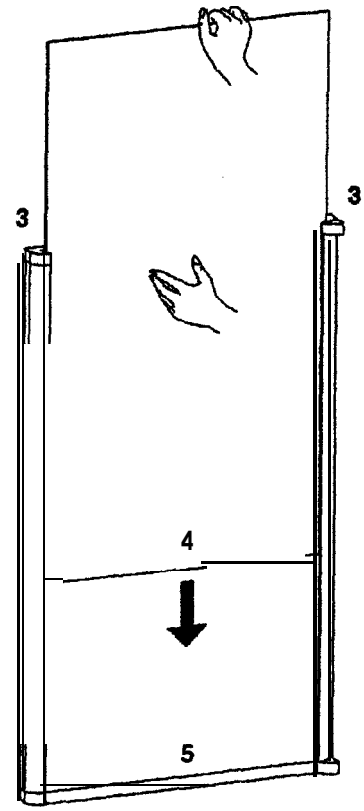

(CERTIFIED VENT SYSTEM KITS

Refr. Model	Kit No.	Components	Drawing
RM 3662 RM3663 RM3662 RM 3663	4A	Roof Vent	3103633 Base 3103634 cap (Both Required)
		Lower Side Vent	3102364 3102277 3102070 3102972 3101534 3101782 3101337

For further information, contact your deafer or distributor.

RM 3662, RM 3862

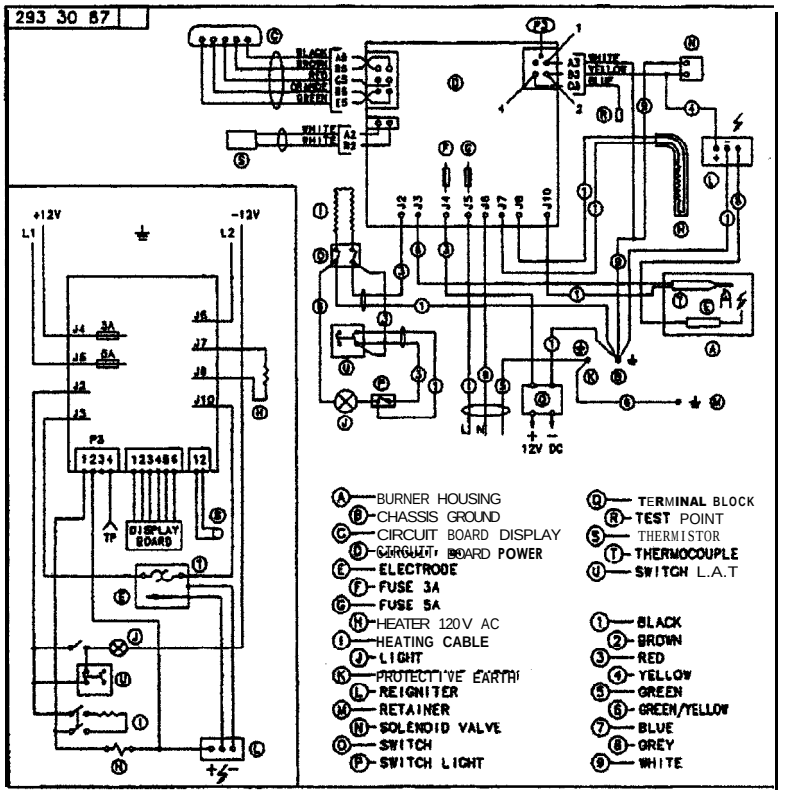
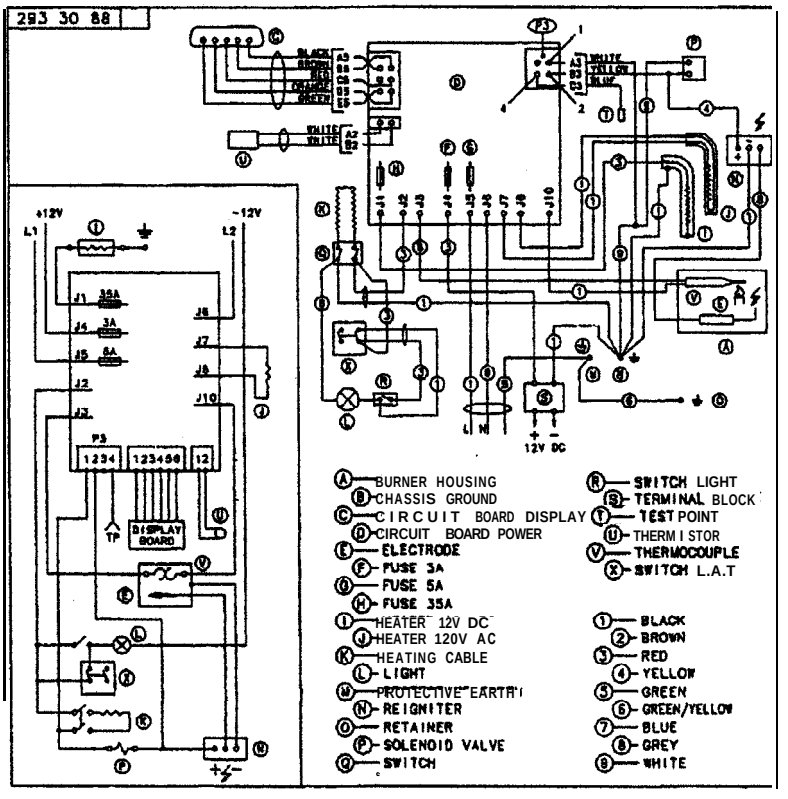
RM 3863, RM 3863