Dometic

RECORD THIS INFORMATION FOR FUTURE REFERENCE BEFORE INSTALLING THE UNIT:
Model No. _____ Serial No. _____
Product No. _____
Date Purchased _____ Place of Purchase _____

USA
SERVICE OFFICE
The Dometic Corp.
509 So. Poplar St.
La Grange, IN 46761
Phone: 219 463 4858

CANADA
Dometic Dist.
866 Langs Dr.
Cambridge, Ontario
Canada N3H 2N7
Phone: 519 653 4390

FOR SERVICE CENTER
ASSISTANCE
CALL: 800 544 4881

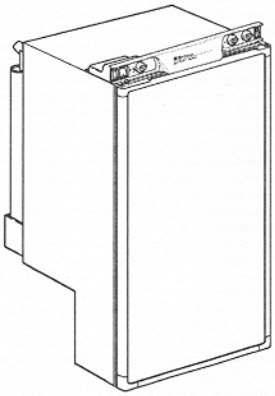

REFRIGERATOR MODEL RM 4290 / RM 4291 / RM 4292

For Mobile Home or Recreational Vehicle Installation

Operation by LP Gas, 12V DC or 120V AC

! WARNING

FOR CHILD SAFETY

DANGER: Risk of child entrapment. Before you throw away your old refrigerator: Take off the doors, leave the shelves in place, so that children may not easily climb inside.

FOR YOUR SAFETY

If you smell gas:

1. **Shut off gas supply at main valve.**
2. **Open windows.**
3. **Don't touch electrical switches.**
4. **Extinguish any open flame.**
5. **Immediately call your gas supplier.**

FOR YOUR SAFETY

Do not store or use gasoline or other flammable vapors and liquids in the vicinity of this or any other appliance.

! WARNING

Improper installation, adjustment, alteration, service or maintenance can cause injury or property damage. Refer to this manual. For assistance or additional information consult a qualified installer, service agency or the gas supplier.

! AVIS

Cet appareil doit être réparé seulement par un réparateur autorisé. Modification de l'appareil pourrait être extrèmement dangeruse, et pourrait causer mal ou mort.

INSTALLATION & OPERATING INSTRUCTIONS

REFRIGERATOR MODEL

RM 4290
RM 4291
RM 4292

IMPORTANT INSTRUCTIONS READ CARFULLY

Electrolux Siegen GmbH
In der Steinwiese 16
D- 57074 Siegen

821 2685-11 TB 11/98

INDEX	Page

Installation	2
Operating Instructions	8
Maint. & Service	11

SECTION A. INSTALLATION

1. GENERAL INSTRUCTIONS

This appliance is designed for storage of food and storage of frozen food and making ice.

The refrigerators outlined herein have been design certified by A.G.A. under ANSI Z21 .1 9 Refrigerator Standard for installation in a mobile home or recreational vehicle and are approved by the Canadian Gas Association. The certifications are, however, contingent on the installation being made in accordance with the following instructions as applicable.

In the U.S.A., the installation must conform with:

1. National Fuel Gas Code ANSI Z223.1-(latest edition)
2. Manufactured Home Construction and Safety Standard, Title 24 CFR, Part 3280
3. Recreational Vehicles ANSI Al 19.2-(latest edition).

The unit must be electrically grounded in accordance with the National Electric Code ANSIINFPA 70-(latest edition) when installed if an external alternating current electrical source is utilized.

4. Any applicable local code.

In Canada, the installation must conform with:

1. Current CGA B 149 Gas Installation Codes
2. Current CSA Standard Z 240.4 GAS-EQUIPPED RECREATIONAL VEHICLES AND MOBILE HOUSING
3. Any applicable local code

The unit must be electrically grounded in accordance with the CANADIAN ELECTRICAL CODE C 22 Parts 1 and 2.

2. VENTILATION

The installation shall be made in such a manner as to separate the combustion system from the living space of the mobile home or recreational vehicle. Louver openings must have a minimum dimension of 1/4 inch for air supply or venting of combustion products.

Proper installation requires one fresh air intake (ventilation system L200) and one upper exhaust vent system (L100). The ventilation kits shown in this instruction manual have been certified for use with the refrigerator model listed in the Table. For "Certified Vent System Kits" see Section B. The ventilation kits must be installed and used without modification. An opening toward the outside at floor level in the refrigerator compartment must be provided for ventilation of heavier-than-air fuel gases. The lower vent of the recommended kits is provided with properly sized openings. The flow of combustion and ventilation air must not be obstructed. The lower side vent is fitted with a panel which provides an adequate access opening for ready serviceability of the burner and control manifold of the refrigerator. This should be centered on the back of the refrigerator.

3. CERTIFIED INSTALLATION

Certified installations require one upper side vent and one lower side vent.

For certified vent system kits, see Section B.
For further information, contact your dealer or distributor.

4. METHOD OF INSTALLATION

The methods of installation are shown in FIG. 1 & FIG. IA. It is essential that all maximum or minimum dimensions are strictly maintained as the performance of the refrigerator is dependent on adequate flow of air over the rear of the refrigerator.

NOTE: The upper vent should be centered over the condenser coil at the back of the refrigerator.

FIG.1

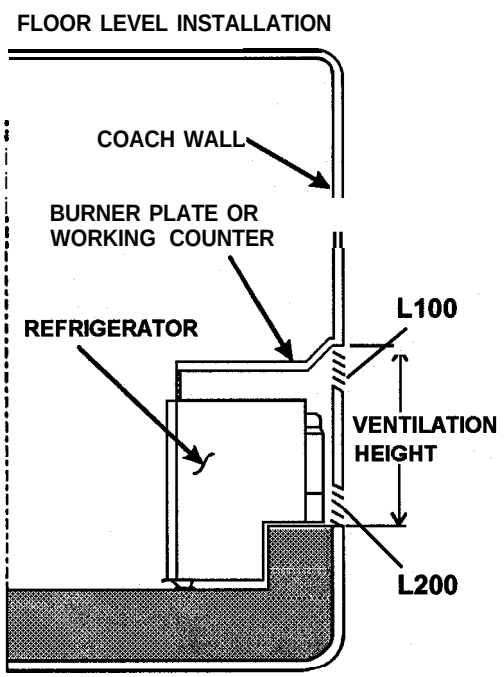

FIG. 1a

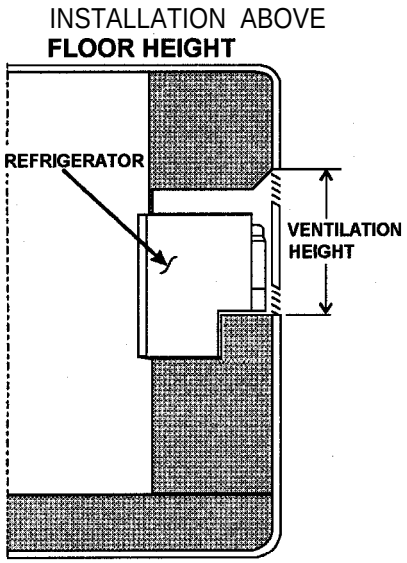

5. VENTILATION HEIGHTS

Refer to FIG 1 & FIG. IA., Pages 1 & 2

Installation with Upper side vent And lower side vent	* Minimum Ventilation Height "N"	
REFRIGERATOR	INCHES	MM
RM 4290, RM 4291, RM 4292 Plastic Side Vents (1) L100 Upper Vent (1) L200 Lower Vent	32	813
* These dimensions represent the minimum height allowable. It is recommended the Upper Vent be located to the maximum possible height of the vehicle for optimum performance in warmer climates.		

6. CLEARANCES

Minimum clearances in inches to combustible materials are:

G:	Top	0"
K:	Side	0"
L:	Bottom	0"
M:	Rear	1"
N:	See NOTE	
P:	See NOTE	

NOTE: Clearance "M" is between the rearmost part of the refrigerator and the wall behind the refrigerator.

NOTE: Clearance "N" is the distance between the bottom of the lower vent to the top of upper side vent. For ventilation height, refer to Section A. Installation, Item 5. Ventilation Heights. See FIG. 2.

Surfaces directly above and sides adjacent to the flue outlet must be of, or covered with, fireproof material. See FIG 2.

NOTE: Clearance "P" over top of unit condenser fins is 1/4 inch. This is the minimum height which can be allowed over the condenser fins. Whenever possible, increase this height by up to 11 inches; the more ventilation you provide, the better the performance you can expect from the refrigerator.

Fig. 2

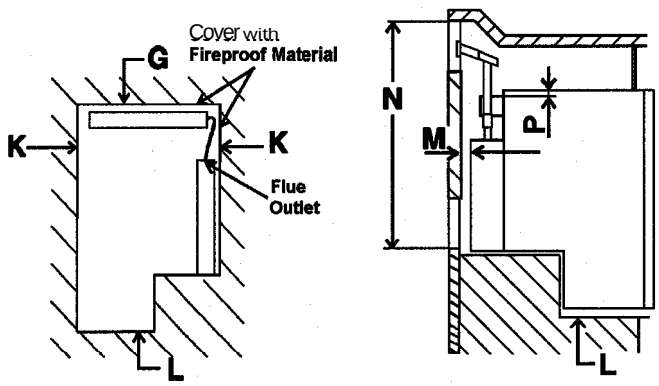

6.1 INSTALLATION VENTILATION SYSTEM L100 / L200

Fig. 2A

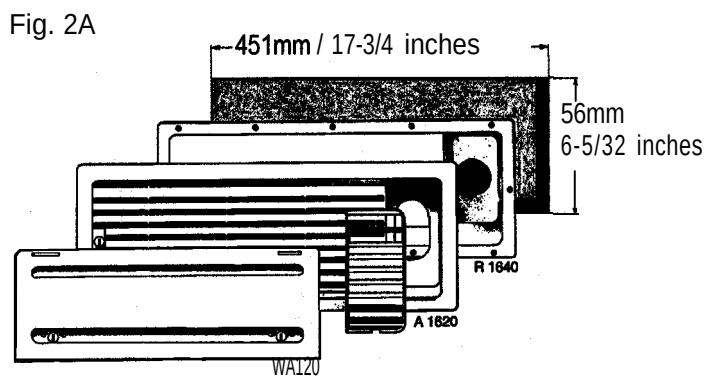

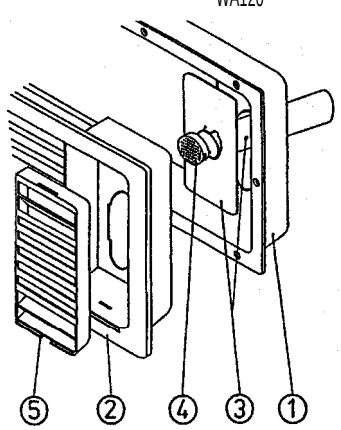

1.) Cut a hole (FIG 2a) into the outside wall in order to install and screw the frame for the grill (pos.1).

2.) Pull the exhaust pipe through the covering plate (pos. 3) and connect it with the exhaust gas chimney of the fridge. Perhaps it may be neccessary to shorten the exhaust pipe to the right lenght.

3.) The installation slit on the right side of the ventilation grill (pos.2) is to be put into the corresponding part of the frame (pos. I), afterwards you have to push the left side of the ventilation grill completely in the frame (pos.1) and fix the ventilation grill at the left side with the plastic tab.

4.) Fix the cap (pos.4) onto the exhaust pipe (pos.3)

5.) Install the element for exhaust outlet (pos. 5) into the ventilation grill (pos.2)

7. INSTALLING REFRIGERATOR IN ENCLOSURE

NOTE: DO NOT install the appliance directly on carpeting. Carpeting must be removed or protected by a metal or wood panel beneath the appliance, which extends at least the full width and depth of the appliance.

The dimensions shown in FIG.3 will give you adequate space for service and proper installation.

FIG 3

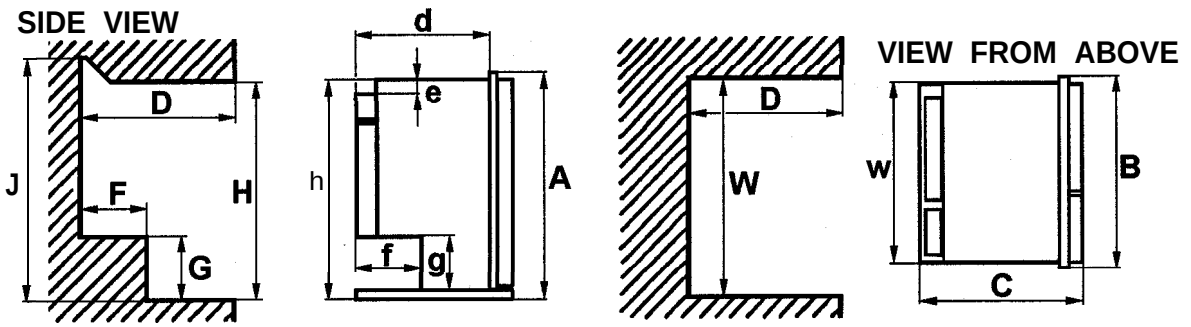

Model: RM 4290 Model: RM 4291 / RM 4292	Overall Dimensions			Installation Dimensions					Recess Dimensions					
	Height A	Width B	Depth C	Height h	Width w	Depth d	Depth f	Height g	Hight H	Width W	Depth D	Depth F '	Height G	Height J
L1 00 / L200 (inches)	32-1/16	22- 1/8	21-1/8	29- 11/32	20-21/32	19	8-19/32	7-17/32	29-5/8	20-3/32	19-15/16	9-17/32	7-1/2	39-9/16
L100 / L200 (mm)	815	562	537	745,5	525	482	218	191,5	752,5	531	507	242	190	1005
	Distance between Top of condenser and Top of refrigerator "e" = 1/4" (6mm)													

A. INSTALLATION

The refrigerator must be installed in a substantial enclosure and must be level. When installing the refrigerator in the enclosure, all areas within the recess in which the refrigerator is installed must be sealed from the living space.

Make sure that there is a complete seal between the front frame of the refrigerator and the top, sides and bottom of the enclosure. A length of sealing strip is applied to the rear surface of the front frame for this purpose. Also apply a sealing strip to the foremost floor of the enclosure and apply a second sealing strip to the bottom of the trim strip on the front base as shown in FIG. 4. The sealing should provide a complete isolation of the appliance's combustion system from the vehicle interior.

FIG 4

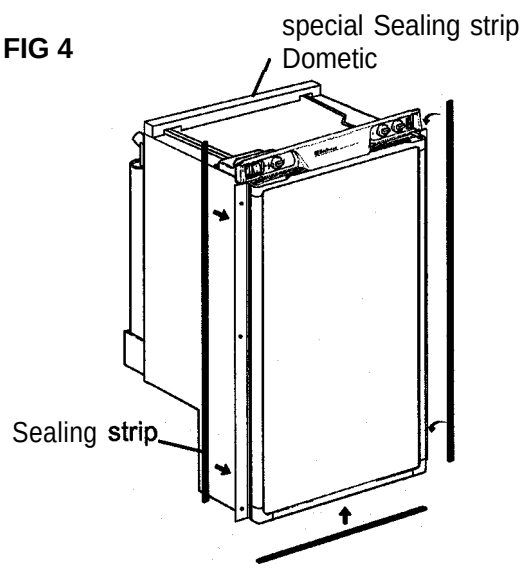

Note: Be careful not to damage the sealing strip applied to the floor of the enclosure when the refrigerator is put in place.

B. CONDENSATE DRAIN HOLE:

A hole must be drilled through flooring "L" (FIG. 2). This hole must be drilled in the one-inch clearance "M" (FIG. 2).

The installer **MUST** make sure that the hose does not kink when run through the floor. Seal around the hose that goes through the drilled hole. If a longer hose than supplied is required to get the water to drain outside of the vehicle, the installer will have to supply the extra length hose.

C. SECURING REFRIGERATOR IN ENCLOSURE

The refrigerator is installed in the enclosure with six screws. The screws are in the front frame. See FIG. 5.

FIG 5

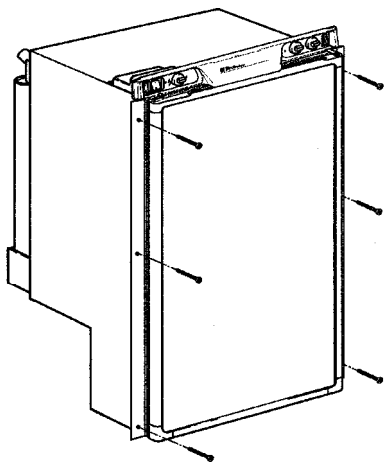

NOTE: Push refrigerator into enclosure until front frame is tight against the cabinet. Secure the frame to cabinet with six screws.

Failure to follow the sequence in securing the refrigerator in the enclosure can cause leakage between the frame and cabinet. Any space between the counter, storage area or ceiling and top of the refrigerator should be blocked. The heat produced at the rear of the refrigerator will become trapped in this space, making the top of the refrigerator hot and reducing the efficiency.

The dimensions shown in FIG. 3 will give you adequate space for service and proper installation.

8. GAS CONNECTION

Hook-up to the gas supply line is accomplished at the manual gas shutoff valve, which is furnished with a 3/8" SAE (UNF 5/8" - 18) male flare connection. Always use a backup wrench when connecting the gas supply line to the gas inlet fitting. All completed connections should be checked for leaks with a noncorrosive leak detector. (See FIG. 6 - Gas inlet fitting may have a different orientation than shown).

! WARNING

DO NOT USE A FLAME

TO CHECK FOR GAS LEAKS

FIG 6

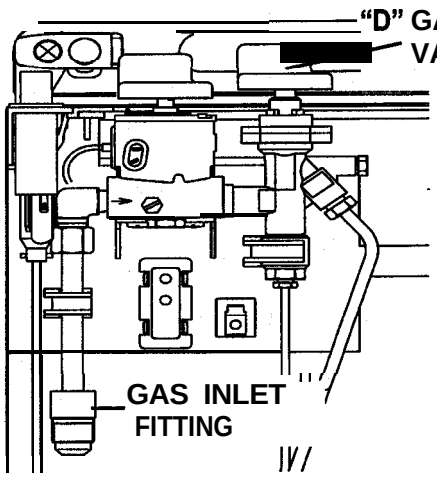

The gas supply system must incorporate a pressure regulator to maintain a supply pressure of not more than 13.5 inches water column, static (no load).

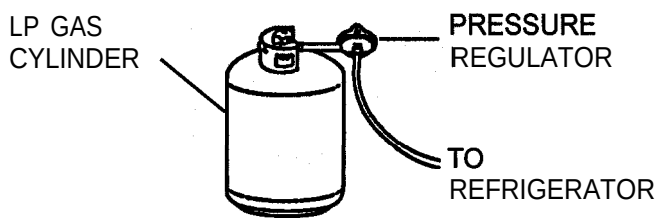

When testing the gas supply system at test pressures in excess of 1/2 psig, the refrigerator and its individual shutoff valve must be disconnected from the gas supply piping system.

When testing the gas supply system at pressures less than or equal to 1/2 psig, the appliance must be isolated from the gas supply piping by closing its individual manual shutoff valve.

In case detailed instructions on the installation and connection to the gas supply are required, contact your dealer or distributor.

9. TESTING LP GAS SAFETY SHUTOFF

The gas safety shutoff must be tested after the refrigerator is connected to LP gas supply.

To test the gas safety shutoff, proceed as follows:

A. Start the refrigerator according to the instructions for LP Gas Operation. See "Section C. Operation *Instructions.* "
B. Check that the gas flame is lit. Allow it to burn a few minutes to ensure a full, stable flame.
C. Turn the gas safety valve (D, FIG. 6) to the "OFF" position. Within I-2 minutes the gas safety device within the valve should automatically close. An audible "click" from the valve may be heard.
D. Turn the gas safety valve to the "ON" position (D, FIG. 6).
E. Without pushing in the knob (D, FIG. 6) of the gas safety device, apply a commercial leak detection solution to the burner jet. No bubbles should appear. Bubbles indicate a gas leak and the safety valve must be replaced by a qualified serviceman.
F. Rinse the burner jet with water. Light the burner and allow it to burn for five minutes.

10.120 VOLT AC ELECTRICAL CONNECTION

The notations in the wiring diagramme are:

A- Electronic igniter/reigniter
B- Electrode (at burner)
C- 12V heating element
D- Switch for 12V operation
E- Switch for reigniter
F- Electric thermostat
G- Heating element. 120V
H- Switch for 12V operation
J- Terminal block
L- Terminal block

! WARNING

Electrical leads must be routed and secured so that they cannot come into contact with hot or sharp parts of the refrigerator.

THIS APPLIANCE MUST BE EARTHED!

The refrigerator is equipped with a three-prong (grounded) plug for protection against shock hazards, and should be plugged directly into a properly grounded three-prong receptacle. DO NOT cut or remove the grounding prong from this plug. The power cord should be routed to avoid direct contact with the burner cover, fuel cover or manual gas shutoff valve knob.

120v

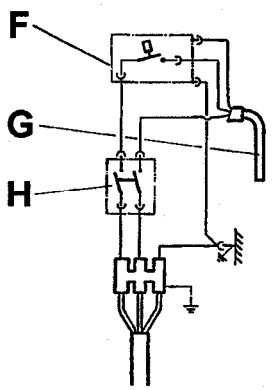

11. 12 VOLT DC SUPPLIES (not by RM 4292)

Connect the refrigerator to the vehicle battery by a direct cable. To avoid a voltage drop, the cross sectional area of the connecting cable between battery and refrigerator must be at least 2,5 mm* (12 A.W.G) if the distance is less than 30ft, and at least 4 mm* (10 A.W.G.) if the distance is more than 9 meters.

To ensure satisfactory operation, the positive lead must be fitted with a fuse rated at max. 15 A.

CAUTION

DO NOT operate the refrigerator on 12 volt DC when the vehicle is parked. The amperage draw of the 12 volt DC heating element can discharge a battery in a very short time. The installation of a 12 volt DC operated refrigerator requires a relay to be installed on the tow vehicle or in a caravan. The relay will automatically shut off the 12 volt DC power to the refrigerator when the ignition is turned off. (See FIG.7)

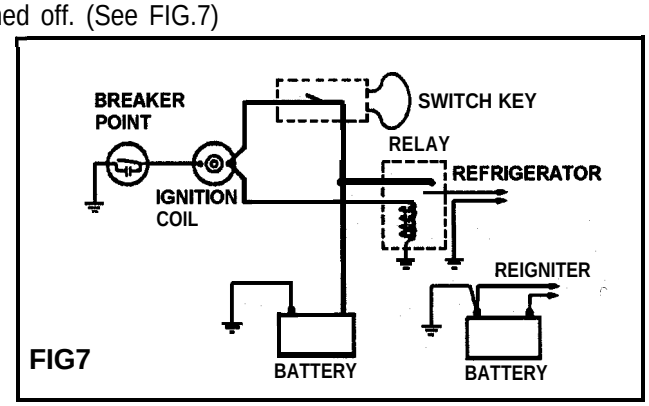

FIG7

12 V supply of refrigerator (RM 4291)

Fig. 8 shows the wiring diagramme of the refrigerator as delivered. The 12 V supply enters at (L). The reigniter (A) is fed via two wires (1) and (2) at terminal block (L).

It is advisable to feed the reigniter and the lighting from a separate 12 V source. To do this: remove the wires (1) and (2) and connect the supply as is shown in FIG. 9. In some executions there in an extra terminal block (J), of FIG. 8. In this case one disconnects the wires as said above but connects the separate supply to (J).

The reigniter should be connected directly to a battery. If a converter is in the system it will keep the battery charged.

FIG8

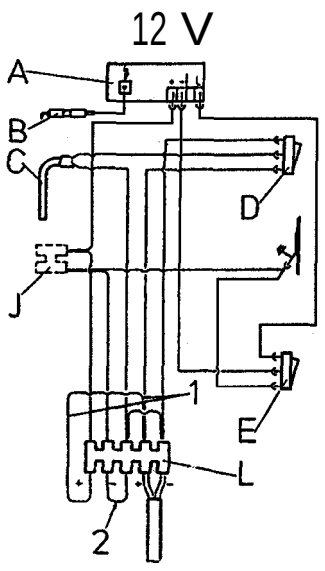

FIG 10

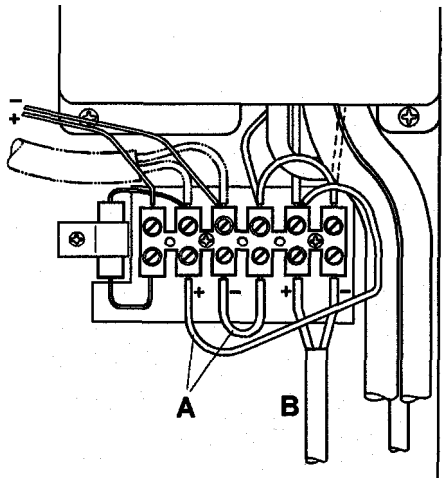

FIG. 11

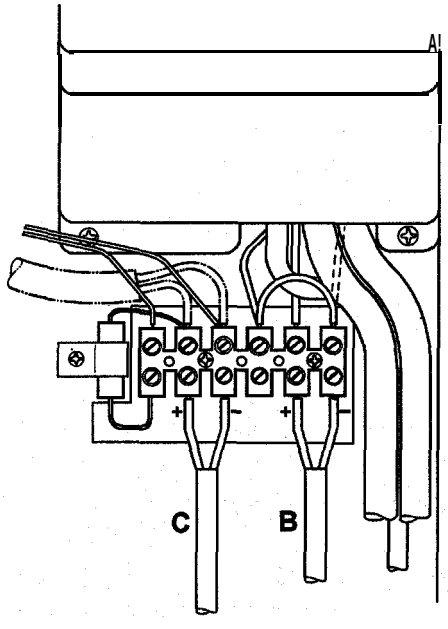

FIG 9

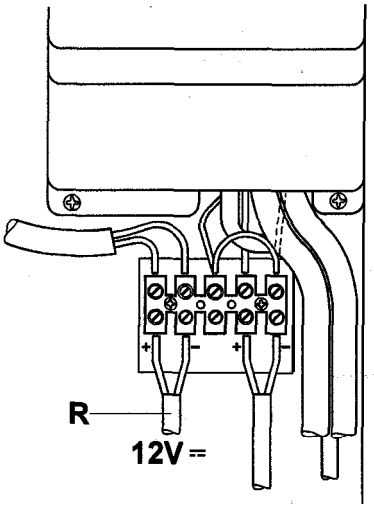

ALL REFRIGERATORS VERSION “L” (LIGHT)

All refrigerators version 'L' are equipped with a 12V DC interior light. The light is switched by an electronic sensor.

Wiring

The 12V interior light should be supplied by a constant 12V power supply, in order to allow the function of the interior light indenpendet from the engine of the vehicle.

The factory wiring of the refrigerator is shown in FIG.lO. The 12V supply of the fridge is realized with only one supply cord **(B** in FIG. IO/II).

Seperate DC supply for interior light

Operation of the 12V cooling mode of the refrigerator should only be possible while the engine of the vehicle is running. Operation of the interior light, requires the wiring to be modified. The two jumpers (A in FIG. 10) have to be pulled out and a second supply cable (C in FIG.ll) has to be installed and connect to a constant 12V DC supply.

12. CHANGING DOOR HINGES FROM ONE SIDE TO THE OTHER

If required, the door hinges can be moved to the opposite side. Reverse the door hang in the following way:

A. Unscrew the upper hinge pin, taking care not to lose the set of washers and bushings.
B. Lift the door from the lower hinge pin. If decorative door panel is to be installed, proceed to Step 13.
C. Unscrew the pin and mount it on the opposite side hinge.
D. Unscrew the travel catch and mount it on the opposite side.
E. Change the cover plate and travel lock plate in top of door frame to opposite side. Use a screwdriver to press down on one edge of the cover plate. The opposite edge will rise above the frame. Use a knife blade under the raised edge to pop it out. See FIG.12.

   Use needle-nosed pliers to carefully lift lock plate out of door frame. See FIG.12.
F. Replace door on lower hinge pin. Replace upper hinge pin and bushings removed in Step A.
G. Check that the door closes properly and seals all around.

FIG 12

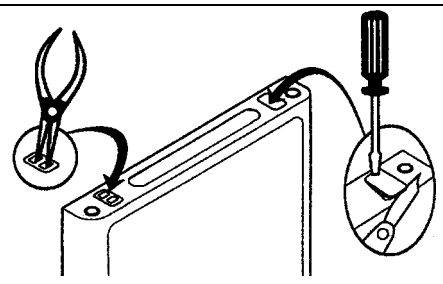

13. INSTALLATION OF DECORATIVE DOOR PANEL

The door panel can easily be mounted. The dimensions of the panel must be:

Height	28-1/2"
Width	1 9-3/8"
Thickness	max 1/8"

A. Remove the door. See Section 12.
B. Remove the lower trim molding. (NOTE: Trim molding is not installed on new units in cartons)
C. Fit the new panel in place and slide it up as far as possible.
D. Fit the trim molding back in place.

SECTION B. CERTIFIED VENT SYSTEMS

PLASTIC VENTS	COMPONENTS	Product No.
	RM 4290 / 91 / 92 upper L100 white	95% 2820-21
	RM 4290 / 91 / 92 lower L200 white	958 2821-21

SECTION C. OPERATING INSTRUCTIONS

1 .IMPORTANCE OF LEVELING A REFRIGERATOR

In an absorption refrigerator system, ammonia is liquefied in the finned condenser coil at the top of the refrigerator. The liquid ammonia then flows into the evaporator (inside the freezer section) and is exposed to a circulating flow of hydrogen gas, which causes the ammonia to evaporate, creating a cold condition in the freezer.

The tubing in the evaporator section is specifically sloped to provide a continuous movement of liquid ammonia downward by gravity through this section.

If the refrigerator is operated when it is not level and the vehicle is not moving, liquid ammonia will accumulate in sections of the evaporator tubing. This will slow the circulation of hydrogen and ammonia gas, or in severe cases, completely block it, resulting in a loss of cooling.

Remember to level the vehicle when stopping for more than an hour, otherwise the cooling unit could be permanently damaged due to overheating if it is left “ON”.

When the vehicle is moving, the leveling is not critical as the rolling and pitching motion of the vehicle will pass to either side of level, keeping the liquid ammonia from accumulating in the evaporator tubing.

2. CONTROLS

FIG 13

A	**=**	DC ON/OFF SWITCH (not by RM 4292)
B	=	AC ON/OFF SWITCH
c	=	AC THERMOSTAT
D	=	**DAS SAFETY VALVE**
E	**=**	**GAS THERMOSTAT**
F	**=**	**SWITCH REIGNITER**
G	**=**	**PIEZO IGNITOR BUTTON**

FIG 13

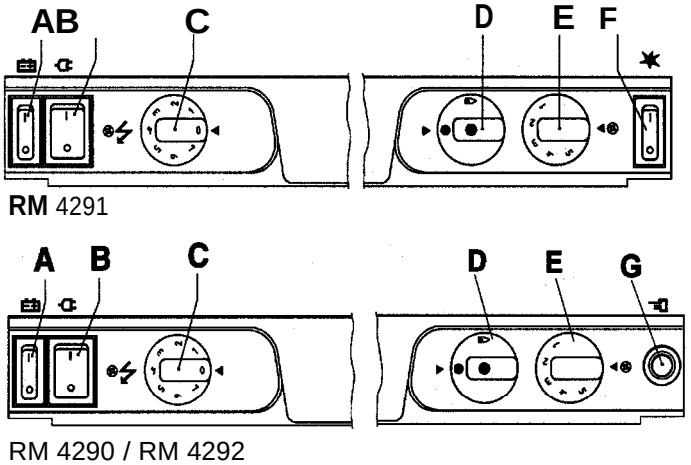

3. OPERATING INSTRUCTIONS

A. LP GAS OPERATION

After initial installation, servicing, or changing gas cylinders etc., the gas pipes may contain some air which should be allowed to escape by briefly turning on the refrigerator or other appliances. This will ensure that the flame lights immediately.

To start gas operation:

1. Open the shut-off valve of the gas bottle (check that there is enough gas). Open any on-board shut-off valve.
2. Check that the switches for mains and 12 V operation are off.

If you have Model RM 4291 proceed as follows:

3. Turn on the gas supply by pressing the (D) knob and turning it to the position "big flame".
4. Set the thermostat knob (E) to the highest setting.
5. Throw on switch (F). A light in the switch should now start to flash, indicating that sparks are being generated at the burner.
6. Press the (D) button. This opens the Rame failure device and allows gas to flow to the burner.
7. When the flame lights, the sparking stops automatically and the switch stops flashing.
8. Keep the (D) button pressed for a further 10 to 15 seconds to active the flame failure device, then release it.

If you have Model RM 4290, RM 4292 proceed as follows:

3. Turn on the gas supply by pressing the (D) knob and turning it to the position "big flame"
4. Set the thermostat knob (E) to the highest setting.
5. Keeping the flame failure device button (D) pressed, operate the igniter (G) until the flame lights.
6. Keep the (D) button pressed for a further 10 to 15 seconds then release it.

The flame can be observed in a wiewing glass inside the refrigerator at the bottom left (RM 4290, RM 4292).

To terminate gas operation, turn knob (D) to "●" and (when applicable) set switch (F) to "0".

CAUTION

DO NOT attempt to operate the refrigerator by both gas and electricity at the same time. Always ensure that one method of operation is turned off before using the alternate energy source.

! WARNING

Most LP gas appliances used in recreational vehicles are vented to the outside of the vehicle. When parked close to a gasoline pump, it is possible that the gasoline fumes could enter this type of appliance and ignite from the burner flame, CAUSING A FIRE OR AN EXPLOSION.

FOR YOUR SAFETY, it is recommended that all LP gas appliances which are vented to the outside should be shut off whenrefueling.

The refrigerator must be shut off during refueling.

B. ELECTRIC OPERATION

120V AC OPERATION

To start 120V AC operation:

1.) Terminate gas operation by turning the knob of the gas control device (D in FIG.13) to the "OFF" position.
2.) If the refrigerator is in 12V DC mode, switch the 12C DC switch (A in FIG.13) to the "OFF" position.
3.) Check that the 120V AC supply cord is connected and that AC is available.
4.) Switch the 120V AC toggle switch (B in FIG.13) to the "ON" position.
5.) On 120V AC operation, the temperature is controlled by a thermostat. The thermostat knob (C in FIG.13) should be set to position 3-5 in normal working conditions. If the ambient temperature is high and/or fresh food is put into the refrigerator, you may set the refrigerator to a higher positions.
6.) To terminate 120V AC operation, switch the AC toggle switch (B in FIG.13) to the "OFF" position.

DC ELECTRIC OPERATION (not by RM 4292)

The DC operation is mainly designed to let the cooling unit of the refrigerator work while being on the road.

To start 12V DC operation, proceed as follows:

1.) Terminate Gas operation by turning the knob of the gas control device (D in Fig.13) to the "OFF" position.
2.) Start 12V DC operation by switching the 12V toggle switch (A in Fig.13) to the "ON" position.

Whenever possible, the cabinet should be precooled, together with its contents, by starting up and running the refrigerator on gas or AC for several hours, or overnight, before switching to 12V DC and starting on a journey.

The 12V heating element is rated at 125 watts and has a current consumption of about 10.5 Amps. The refrigerator should not therefore be left operating on 12V when the engine is not running and charging the battery.

If an automatic cut-out relay, as recommended in Section A, item 11, has not been installed, the refrigerator should be switched off at the 12V toggle switch (A in Fig.13) soon after the engine is switched off, otherwise the battery may become discharged.

3.TO TERMINATE DC OPERATION

To terminate DC operation, turn the DC switch to the "OFF" position (A in FIG.1 3).

4.HOW TO USE THE REFRIGERATOR

A. FOOD STORAGE COMPARTMENT

The storage compartment is completely closed and unventilated, which is necessary to maintain the required low temperature for food storage. Consequently, foods having a strong odor or those that absorb odors easily should be covered. Vegetables, salads, etc. should be covered to retain their crispness. The coldest positions in the refrigerator are under the cooling fins and at the bottom of the refrigerator. The warmer areas are on the upper door shelves. This should be considered when placing different types of food in the refrigerator.

The refrigerator is designed for the storage of fresh foods, milk, etc. It is not intended for the storage of frozen food. The internal volume of the refrigerator is 861 (3.0 cubic feet) , net.

NEVER PUT HOT FOOD INTO THE REFRIGERATOR.

Avoid using large dishes and do not stack food or food containers too closely as this interferes with the circulation of cold air within the cabinet.

If possible, start the refrigerator on gas or AC the day before it is to be used, to allow time for the interior to be cooled. It is then preferable to load the refrigerator with food which has been precooled in your household refrigerator, or in the market.

Before moving the vehicle, make sure that all containers are tightly covered to avoid spills. If required, crumpled paper may be packed between bottles and other items to prevent shifting while traveling.

Engage the travel catch at the top of the front corner of the door before moving the vehicle.

B. DEFROSTING

To defrost, take out any food, etc. then turn off the gas valve or switch off the DC/AC supply to the refrigerator. Leave the refrigerator door open and place a suitable dish or other receptacle under the evaporator to catch the defrost water.

When all the frost has melted, any remaining drops of water in the refrigerator should be wiped up with a clean cloth.

CAUTION

DO NOT use **a hot air blower. Permanent damage could result from warping the metal or plastic parts. DO NOT use a knife or an ice pick, or other sharp tools to remove frost from the freezer shelf.**

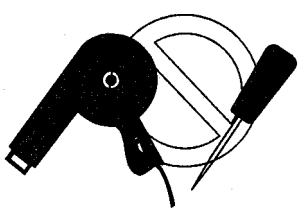

C. CLEANING

Cleaning the refrigerator is usually done after it is defrosted or put into storage. To clean the interior of the refrigerator, use lukewarm water and a mild dishwashing detergent. Use only warm water to clean the finned evaporator, gaskets, ice trays and shelves. **NEVER** use strong chemicals or abrasives to clean these parts as the protective surfaces will be damaged. It is important to always keep the refrigerator clean.

D. SHUTOFF (STORAGE PROCEDURE)

Place the toggle switch(es) for DC and AC operation to the “OFF” position or turn the gas valve to position “OFF”, as applicable. See FIG.13.

When not in use, the refrigerator should be emptied, cleaned and dried and the door left open so that fresh air can circulate inside.

The travel latch placed in the second hole will hold the door ajar and allow air to circulate.

E. TRAVEL CATCH

Make sure that the travel catch is engaged when the caravan is on the move.

The travel catch at the top of the door can be set in two different positions. in one position the door is held tightly shut. in the other position the door is secured ajar so that the refrigerator can be aired when not in use.

SECTION D. MAINTENANCE & SERVICE

TIPS FOR THE SERVICE TECHNICIAN

The user should be aware of service that must be done on a regular schedule to keep the refrigerator operating properly. **The service should only be performed by a qualified technician who is familiar with LP gas systems and refrigerators.**

1 .REFRIGERATOR REMOVAL

Before working on, or removing the refrigerator, make sure the electrical supply (AC and DC) is turned OFF before leads are disconnected. Shut off the gas supply. Disconnect and cap the gas supply line. Loosen the screws anchoring the refrigerator to the enclosure and slide the refrigerator out of the compartment.

Replacement is the reverse of removal. Check all connections for gas leaks.Refer to Section A, Item 1 through 13 of Installation Instructions.

2. PERIODIC MAINTENANCE

To keep a Dometic refrigerator operating efficiently and safely, periodic inspection and cleaning of several components once or twice a year is recommended.

A. It is important to keep the area at the back of the refrigerator clean. Check the lower vent, upper vent and area between these openings for any obstructions such as bird/insect nests, spider webs, etc. Clean the coils on the back of the refrigerator. Use a soft brist led brush to dust off the coils..

NOTE: AVOID SPRAYING WATER THROUGH THE REFRIGERATOR VENTS WHEN WASHING THE RV.

It is important to keep the refrigerator vent area free from combustible material, gasoline and other flammable vapors or liquids.

B. Check all connections in the LP gas system (at the back of the refrigerator) for gas leaks. The LP gas supply must be turned on. Apply a noncorrosive bubble solution to all LP gas connections. The appearance of bubbles indicates a leak and should be repaired immediately by a qualified serviceman who is familiar with LP gas systems and refrigerators.

! WARNING

DO NOT USE A FLAME TO CHECK FOR GAS LEAKS.

C. Examination and Cleaning of Flue, Burner and Jet

Once or twice a year, unscrew (B in FIG.16) the burner box and look through the burner (see FIG.14). Examine the appearance of the burner flame which should be predominantly blue in color when the gas thermostat knob is set to its highest position. (Refer to FIG.15).

If this is not the case, clean the flue, burner, jet, etc. (see section D and E).

FIG **14**

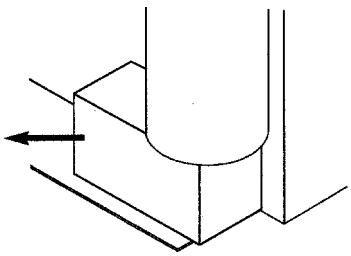

FIG 15

CLEAR BLUE COLOR OF FLAME

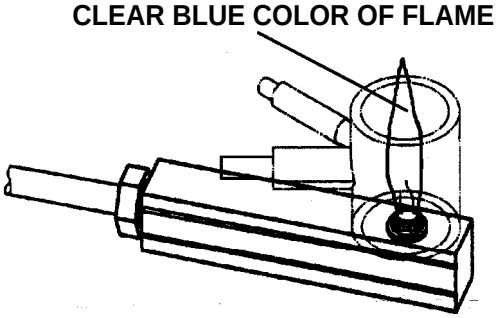

D. Cleaning of Burner, Burner Jet (Refer to FIG 16)

Proceed as follows:

1) Turn off the gas at the gas bottle.
2) By using a phillips screwdriver, remove the screw (B) and carefully withdraw the burner cover box. Clean the inside of the box of soot and other deposits.
3) To clean the burner, unscrew the screw (C) that fixes the burner on the boiler tube and be careful in order not to lose the washer.
4) Clean the inside of the burner.
5) To examine and eventually clean the burner jet, unscrew the gas pipe union (K) and pull out the burner jet (L).
6) Clean the jet by washing it in alcohol and blowing it through with air.

NOTE: **The jet fitted to this refrigerator is a size "43" which is suitable for use on propane gas at 11 inches water column. The orifice in the jet is very small and must never be cleaned by means of a pin or similar instrument as this would damage the orifice. It must only be cleaned as described above.**

! CAUTION

DO NOT **use a wire or pin when cleaning the burner jet as damage can occur to the precision opening. This can cause damage to the refrigerator or create a fire hazard.**

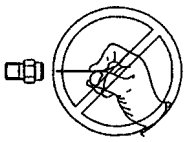

7) Reassemble the components in the reverse order to that described above:

FIG 16

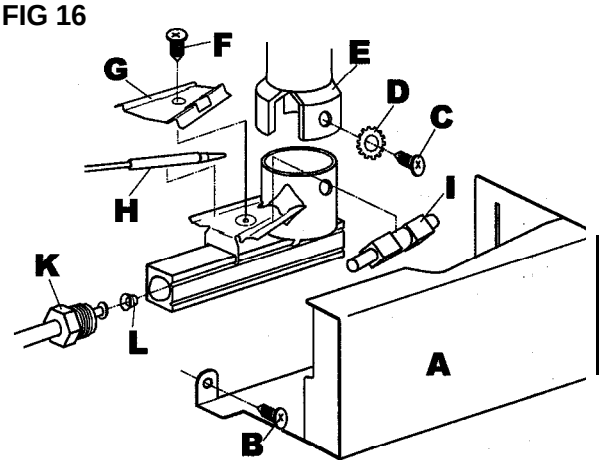

E. **CLEANING OF FLUE TUBE, FLUE BAFFLE**

Proceed as follows:

1) To clean the flue tube and the flue baffle, it is necessary to withdraw the refrigerator out of the recess. See *Section D, Item 1.*
2) By using a phillips screwdriver, remove the screw (B, in FIG.16) and carefully withdraw the burner cover box.
3) Place a piece of paper or cloth between the boiler tube (E, in FIG.16) and the burner assembly, to catch falling deposits.
4) Remove the 'T-piece" (A, in FIG17) at the top of the flue by unscrewing the screw (B, in FIG.17) that fixes it to the flue pipe.
5) Carefully takeout the flue baffle (C, FIG.17) and clean.
6) Clean the flue tube of soot, etc. with the aid of a special flue brush, available from your supplier.

FIG 17

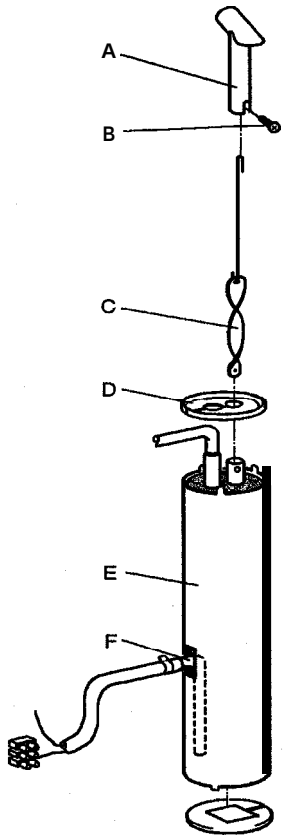

7) Reassemble the components in the reverse order to that described for removal, taking care to remake the gas connections soundly, and not forgetting to refit the flue baffle.

6) Reinstall the refrigerator in its recess. Connect the gas and electrical supplies, and check for gas leaks. Light the burner and check the appearance of the flame to ensure that it is predominantly blue (when the thermostat is at "MAX"), then leave the refrigerator on "test" for at least an hour.

F. Replacing of ignition system

If the flame cannot be lit because no sparks are produced by pushing the plunger, please check:

1. If the connection cable between the **piezo igniter (G** in FIG.13) and the electrode (I in FIG.16) is not defective or loose. If it is broken or if the insulation of the wire is defective, replace the connection cable.

1a. If the connection cable between the **reigniter electronic** (F in FIG.13) and the electrode (I in FIG. 16) is not defective or loose. If it is broken or if the insulation of the wire is defective, replace the cpl. ignition cable with electrode.

2. If the **piezo igniter** has to be replaced, remove the ignition cable and pull out the defective igniter (G in FIG.13) by unscrewing the nut under the plate that holds the controls. Put in the new piezo igniter, fix it by screwing on the nut. Re- connect the ignition cable.

2a. If the **reigniter electronic** is defective, remove the ignition cable from the reigniter, unscrew the electronic and replace it with a new one.

3 If the **piezo electrode** (I in FIG.1 6) is defective, screw out-the burner as described in item 22b. Carefully loosen the metal plate (G in FIG.16) by loosing srew (F) and take out the defective electrode. Put the ignition cable on the new electrode and fix the metal plate (G).

3a. If the **reigniter electrode** (I in FIG.16) is defective screw out the burner as described in item 22b. Carefully loosen the metal plate (G in FIG.16) by loosing srew (F) and take out the defective electrode with cable. Pull out the ignition cable from the reigniter electronic and replace the cpl. ignition cable with electrode.

Check, that the thermocouple (H) and the electrode are in the original position !

G **Replacing of thermocouple**

The tip of the thermocouple senses the flame. To replace the thermocouple proceed as follows:

1. Disconnect the thermocouple connection at the flame safety failure device (D in FIG.13).
2. Remove the faulty thermocouple out of the burner and put in a new one usig the description above for changing the spark- electrode, step "F".
3. Carefully tighten the thermocouple connection to the falme safety failure device. Tighten it "finger- tight" plus 1/4 turn. The plug must be properly tightened to the safety'device to ensure good contact.

Do not overtighten!

H. Lubrication

I. **Electric equipment**

Before eventually replacing one of the electric heaters, please check all the items of "3. TROUBLESHOOTING".

If the fridge does not operate in one of the possible electrical modes because a fuse is blown, examine the supply wiring, cut- out relay (if installed) and repair any faulty components or wires before fitting a new fuse and reconnecting.

If current is available to the fridge (evt. measured with an electricaltest- meter at the input- clamps) and the cooling unit at the back does not heat up after being "on" for at least half an hour, this indicates that the heater has an open circuit and needs replaced by a new one. (If an electrical test- meter is available, the two heater leads can be disconnected and the heater tested for continuity).

To replace the 12V DC heater or the 120V AC heater, proceed as described below:

1. Remove the refrigerator out of the recess as described in item "2E".
2. Remove the boiler insulation cover (D in FIG. 12) and remove the boiler insulation (E in FIG. 12).
3. Disconnect the faulty heater (F in FIG. 12) from the terminals and remove it from the metal pocket on the boiler.
4. Check that the new heater is of the correct type and voltage and fit it in the boiler tube pocket in the same way as the original was fitted.
5. Fit the boiler insulation round the boiler tube and replace the boiler insulation cover.
6. Connect the heater leads to the terminal block and switch as before and re- install the refrigerator. Check for gas leaks and test the fridge for satisfactory operation.

3. TROUBLESHOOTING

If the refrigerator fails to work, check the following points before calling a service technician:

A. Instructions for STARTING THE REFRIGERATOR, Section C, have been followed.

B. The refrigerator is level.

C. If it is possible to start the refrigerator on any of the connected sources of energy.

D. If the refrigerator fails to work on GAS, check:

1) That the gas bottle is not empty.

2) That all LP Gas valves in the supply line to the refrigerator are open.

NOTE: The following checks should be performed only by a qualified technician.

3) That sparks are generated by the piezo ignitor or ignition electronic.

4) That the flame continues to burn after releasing the knob of the flame failure device (D, in FIG.13). If not, the thermocouple may be loose or defective.

E. If the refrigerator fails to work DC, check:

1) That the DC supply is connected to the refrigerator.

2) That the fuse on the DC supply is intact.

3) That the DC switch is set to the "ON" position (A, in FIG.13).

2) That the fuse on the AC supply is intact.
3) That the AC switch is set to the “ON” position.
4) That the AC thermostat is not set to the “0” position.

G. If the refrigerator is not cold enough it may be because:

1) The ventilation is inadequate because of reduced area of the ventilation passages (partial blockage of grilles from wire mesh, etc.).
2) The evaporator is frosted up.
3) The temperature control setting is incorrect.
4) The gas pressure is incorrect. Check the pressure regulator.
5) The ambient temperature is too high.
6) Too much warm food is loaded at one time.
7) The door is not properly closed or the magnetic sealing strip is defective.

All of the previous instructions are to be followed closely This refrigerator is quality guaranteed; however, we are not responsible for any failures caused by improper adjustments and unfavorable installation conditions. If assistance is required, contact the service point or distributor service department.