Dometic

Dometic
Spare parts list

When ordering parts, always state:
MODEL NO. - PRODUCT NO. - QUANTITY -
PART NO. – DESCRIPTION
For electric details also state:
VOLTAGE – WATTAGE
Add a 0 in front of part numbers with less than 10 digits

Recreational Vehicle Refrigerator

PNC	Voltage	Brand	Model	Door	Market
921084497	120VV/ 60Hz AC	Dometic	RML8330	Right	CA - US
921084995	120VV/ 60Hz AC	Dometic	RML8330	Left	CA - US

SERVICE OFFICE
USA
Dometic Corporation
2320 Industrial Parkway
Elkhart, IN 46516

CANADA
Dometic Corporation
46 Zatonski, Unit3
Brantford, ON N3T 5L8
CANADA

Service Center
and Dealer Locations
www.eDometic.com

Publication-No.
599774039
2016/03/30

© Dometic Corporation

Product specification 92108449700 RML8330

Technical features

Width	16,54 in
Height	50,91 in
Depth	23,52 in
Weight	37 kg

Heating element

Voltage	120V V/ 60Hz AC
Performance	170W W
Voltage	12V V/Hz DC
Performance	170W W

Fridge thermostat

Max settings	
Cut-in / cut-out	12,2 +/-2,7 // -4 +/- 2,7 °F
Warm position	
Cut-in / cut-out	44,6 +/-1,8 // 35,6 +/- 1,8 °F
Capillary length	59,06 in

Door stopper

Right

© Dometic Corporation

Product specification 92108499500 RML8330

Technical features

Width	16,54 in
Height	50,91 in
Depth	23,52 in
Weight	37 kg

Heating element

Voltage	120V V/ 60Hz AC
Performance	170W W
Voltage	12V V/Hz DC
Performance	170W W

Fridge thermostat

Max settings	
Cut-in / cut-out	12,2 +/-2,7 // -4 +/- 2,7 °F
Warm position	
Cut-in / cut-out	44,6 +/-1,8 // 35,6 +/- 1,8 °F
Capillary length	59,06 in

Door stopper

Left

© Dometic Corporation

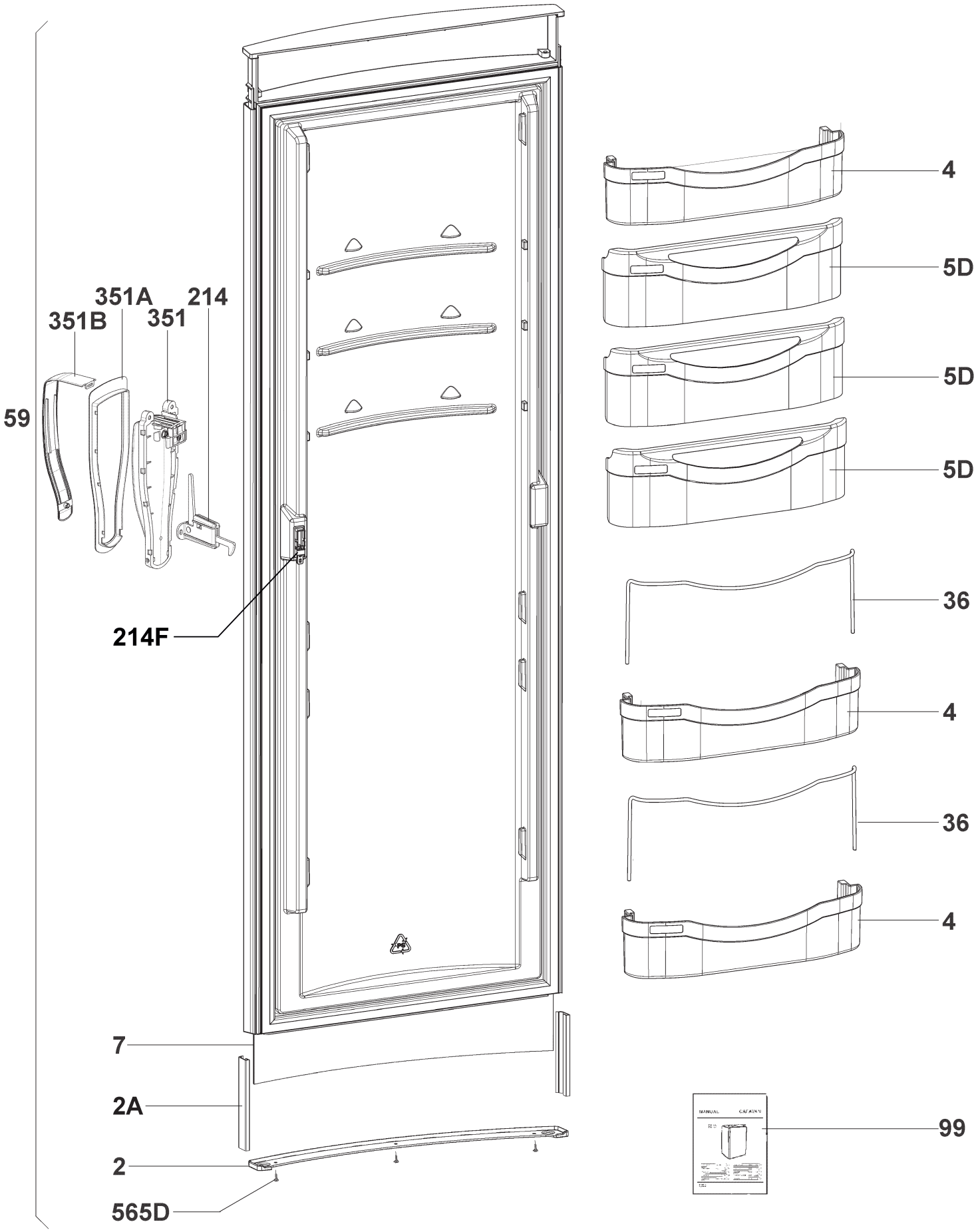

Nur die im Text aufgeführten Ersatzteile sind tatsächlich im Produkt
Only the spare parts which are listed are really in the product

(PRML8330T)

© Dometic Corporation

Exploded view no.: PRML8330T
P00003081379

Matrix	PNC	ELC	ProdDate	Model
A	921084497	00	20140115	RML8330
B	921084995	00	20140618	RML8330

Pos	Part No.	Matrix	Description
002	2412880201	A B	Cover ledge,door,black/grey
004	2413408226	A B	Bottle shelf,blue,L=314mm
005D	2413416823	A B	Flap door,door compartment,blue,L=309mm
007	2890286616	A -	Decoration plate,doorhang right,doorhang right,RAL 900
007	2890286111	- B	Decoration plate,doorhang left,silver,RAL9006
036	2412104503	A B	Bottle-retainer,zinc-plated,L=215,5mm
059	2413258613	A -	Door,complete,service,416x1280mm
059	2413258498	- B	Door,complete,service,416x1280mm
099	2890111178	A B	User manual,RML 8330 USA EN/FR
214	2412126209	A B	Door lock,door
214F	2412129435	A B	Cover,door lock
351	2890121201	A B	Door handle
351A	2890122100	A B	Cover,handle insert
351B	2890121102	A B	Cover,door handle,chrome plated
565D	7296279016	A B	Countersunk screw,C 3,5x9,5

© Dometic Corporation

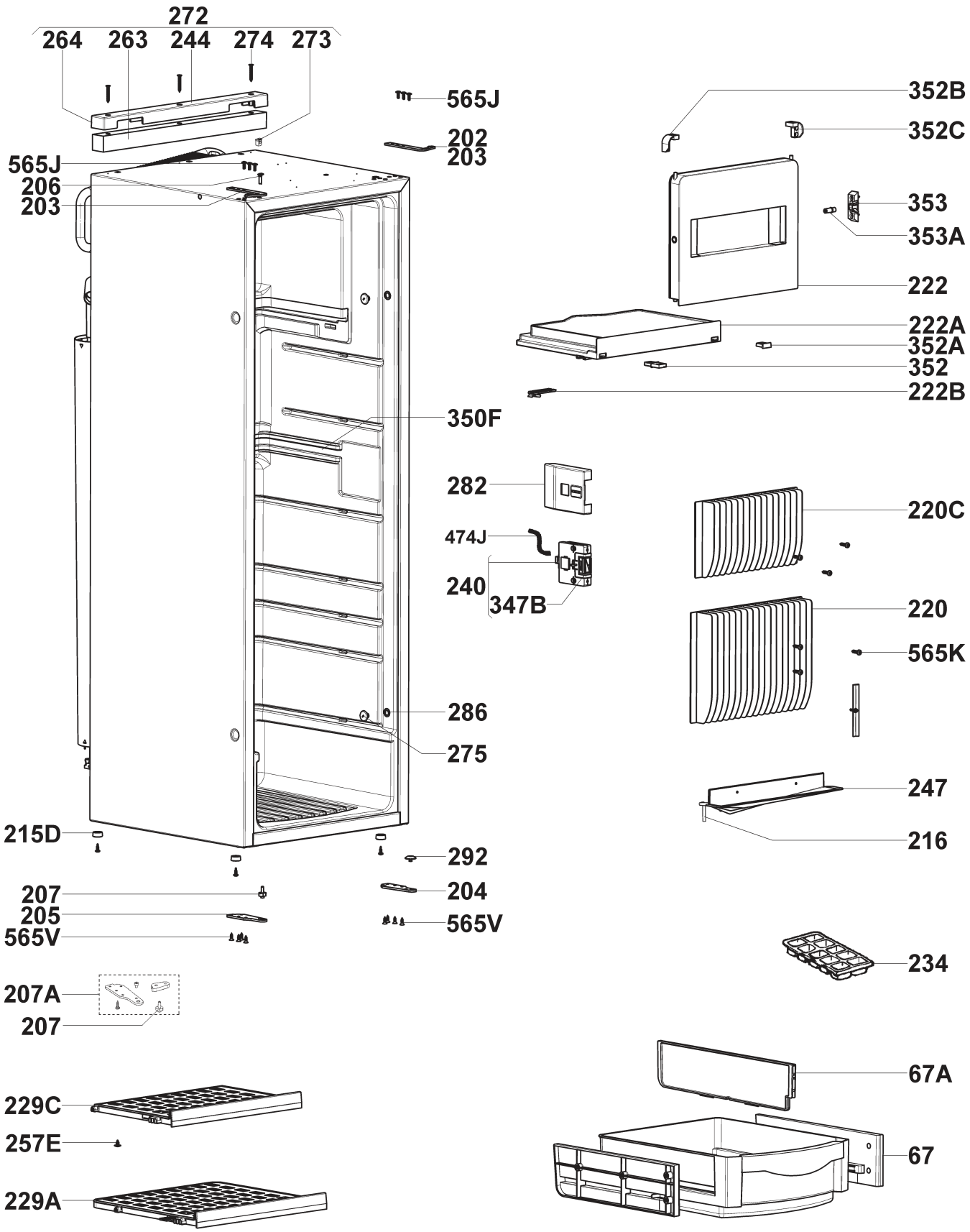

Nur die im Text aufgeführten Ersatzteile sind tatsächlich im Produkt
Only the spare parts which are listed are really in the product

© Dometic Corporation

Exploded view no.: PRML8330G1
P00013081380

Matrix	PNC	ELC	ProdDate	Model
A	921084497	00	20140115	RML8330
B	921084995	00	20140618	RML8330

Pos	Part No.	Matrix	Description
-	2923347104	A B	Kit,drain hose,connection
067	2413367505	A B	Crisper,blue,313x401x122mm
067A	2413377405	A B	Divider,crisper,blue
202	2413414208	A B	Hinge,upper,right-left,chrome plated
204	2412098507	A B	Hinge,lower right,chrome plated
205	2412099505	A B	Hinge,lower left,chrome plated
206	2924892009	A B	Bolt,hinge,upper,L=17,5mm
207	2926265204	A B	Bolt,hinge,chrome plated,L=21,5
215D	2923297028	A B	Foot,complete,black,D=18x8mm
216	2923346338	A B	Drain hose,D=8/1x900mm
220	2412948040	A B	Rear-evaporator,complete
220C	2412948032	A B	Rear-evaporator,complete,freezer compartment
222	2412195709	A B	Door,freezer compartment
222A	2413339504	A B	Base,freezer compartment
222B	2413327202	A B	Slider,for,freezer compartment
229A	2413981610	A B	Grid,bottom,blue,331x303mm
229C	2413981719	A B	Grid,upper,blue,331x219mm
234	2951132006	A B	Ice tray,PLASTIC
240	2890371111	A -	Door lock,lighting,fridge,right hang
240	2890371012	- B	Door lock,lighting,fridge,left hang
244	2923842302	A B	Cover ledge,back,upper,L=419mm
247	2952286207	A B	Drop profile,complete
257E	2923142059	A B	Expanding rivet,nature,D=4,1x10mm
263	2925065308	A B	Insulating strip,30x30x416mm
264	2926458007	A B	Insulating strip,cover ledge,15x30x100mm
272	2923842708	A B	Cover ledge,complete,L=419mm
273	2926545209	A B	Nut,plastic,nature
274	7296350015	A B	Countersunk screw,4,2x32
275	2951221056	A B	Cover cap,S0510R80B
282	2413268026	A B	Cover,Catch,lighting
286	2926544004	A B	Bolt,Spax, 4x17
292	2412743110	A B	Cap,hinge,NCS S 4502-Y GL
347B	2413271012	A B	Receptor,lock tab
350F	2413261617	A B	Cover,cable,lighting
352	2925177103	A B	Bearing,bottom,freezer compartment
352A	2925177202	A B	Stopple,bearing,freezer compartment
352B	2925177301	- B	Bearing,upper left,freezer compartment
352C	2925177400	A -	Bearing,upper right,freezer compartment
353	2412273407	A B	Trigger,freezer compartment
353A	2412273704	A B	Pin,trigger,freezer compartment
474J	2413433307	A B	Connection wiring,lighting,L=1600mm, PIEZO
565J	2926541018	A B	Bolt,Baking tray,B 3,9x13
565K	2951230008	A B	Lens screw,Torx B4,8x19

© Dometic Corporation

Exploded view no.: PRML8330G1
P00013081380

Matrix	PNC	ELC	ProdDate	Model
A	921084497	00	20140115	RML8330
B	921084995	00	20140618	RML8330

Pos	Part No.	Matrix	Description
565V	2924417021	A B	Countersunk screw,C3,9x13

© Dometic Corporation

© Dometic Corporation

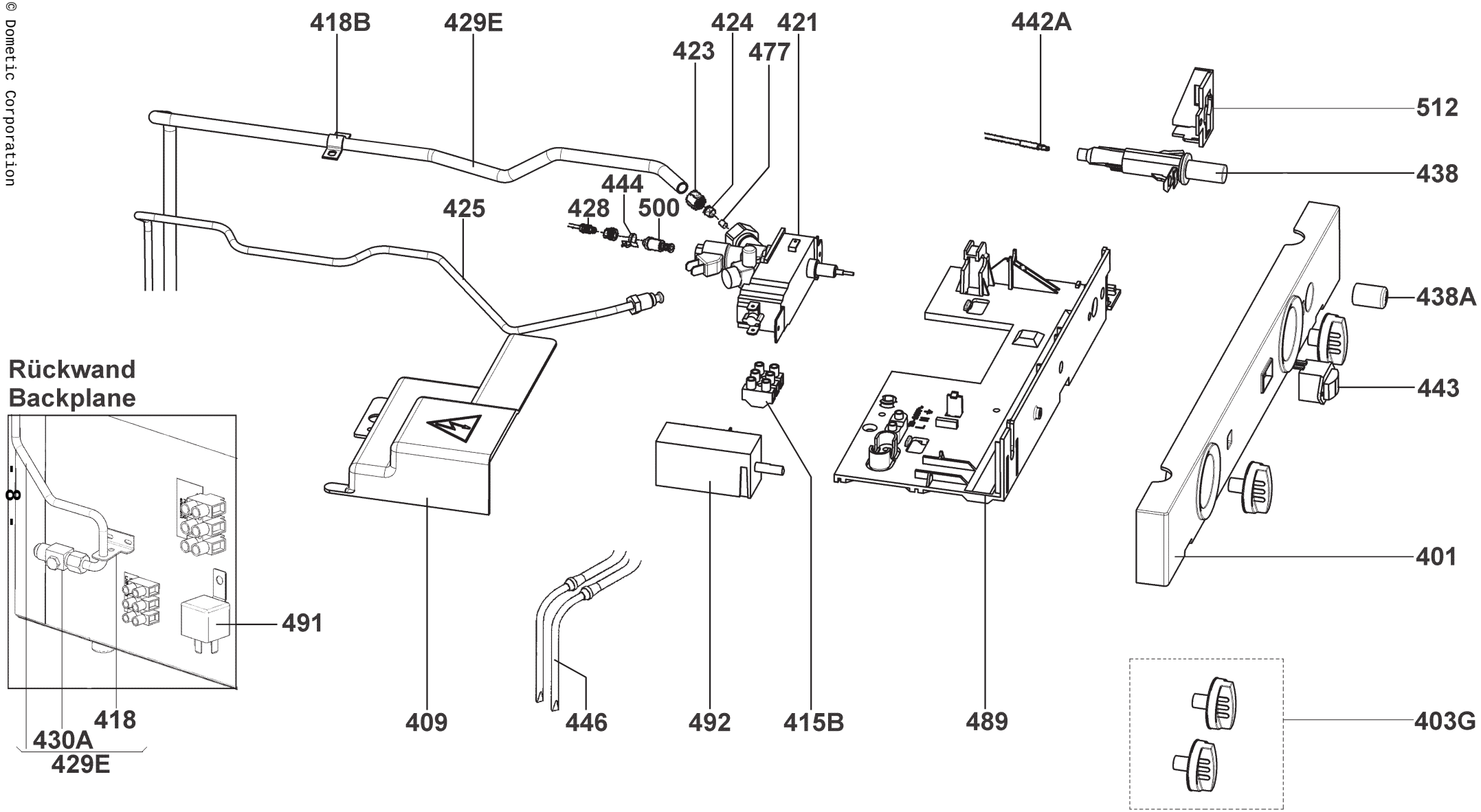

Nur die im Text aufgeführten Ersatzteile sind tatsächlich im Produkt
Only the spare parts which are listed are really in the product.

(PRML8330ARUSA)

Exploded view no.: PRML8330ARUSA
P00023081382

Matrix	PNC	ELC	ProdDate	Model
A	921084497	00	20140115	RML8330
B	921084995	00	20140618	RML8330

Pos	Part No.	Matrix	Description
401	2413243300	A B	Control panel,black/grey,L=420mm
403G	2412350627	A B	Kit,turning knob,selector switch,Gasvalve, black-grey
409	2412093201	A B	Cover,electric,black
415B	2413255015	A B	Terminal board,3-pol, 4mm²
418	2926202009	A B	Bracket,for,gas connection
418B	2106740000	A B	Fixing clamp,D=8
421	2412190205	A B	Mountings,compact,gas,AC (elektrik) V85
423	2923189001	A B	Union nut,M15x1
424	2923190009	A B	Double cone ring,D=8,1
425	2412593994	A B	Gas inlet pipe
428	2923435909	A B	Thermocouple,complete,L=2200mm, CBS1
429E	2412498830	A B	Kit,gas connection,tube
430A	2952220313	A B	Gas connection,USA
438	2923024612	A B	Piezo lighter,black,RV381
443	2923499210	A B	Dial,gas
444	2952985006	A B	Adaptor,insulator
446	2412968105	A B	Heater,12V/170W
446	2890126010	A B	Heater,120V/170W
477	2923191007	A B	Filter,for,gas connection
489	2412091908	A B	Instrument retainer,L=282,5mm
491	2952089007	A B	Relay,12V, 30A
492	2952025522	A B	Selector switch,complete,service
500	2106030105	A B	Magnet insert,mountings,compact
512	2106453109	A B	Boss,instrument retainer,ignition

© Dometic Corporation

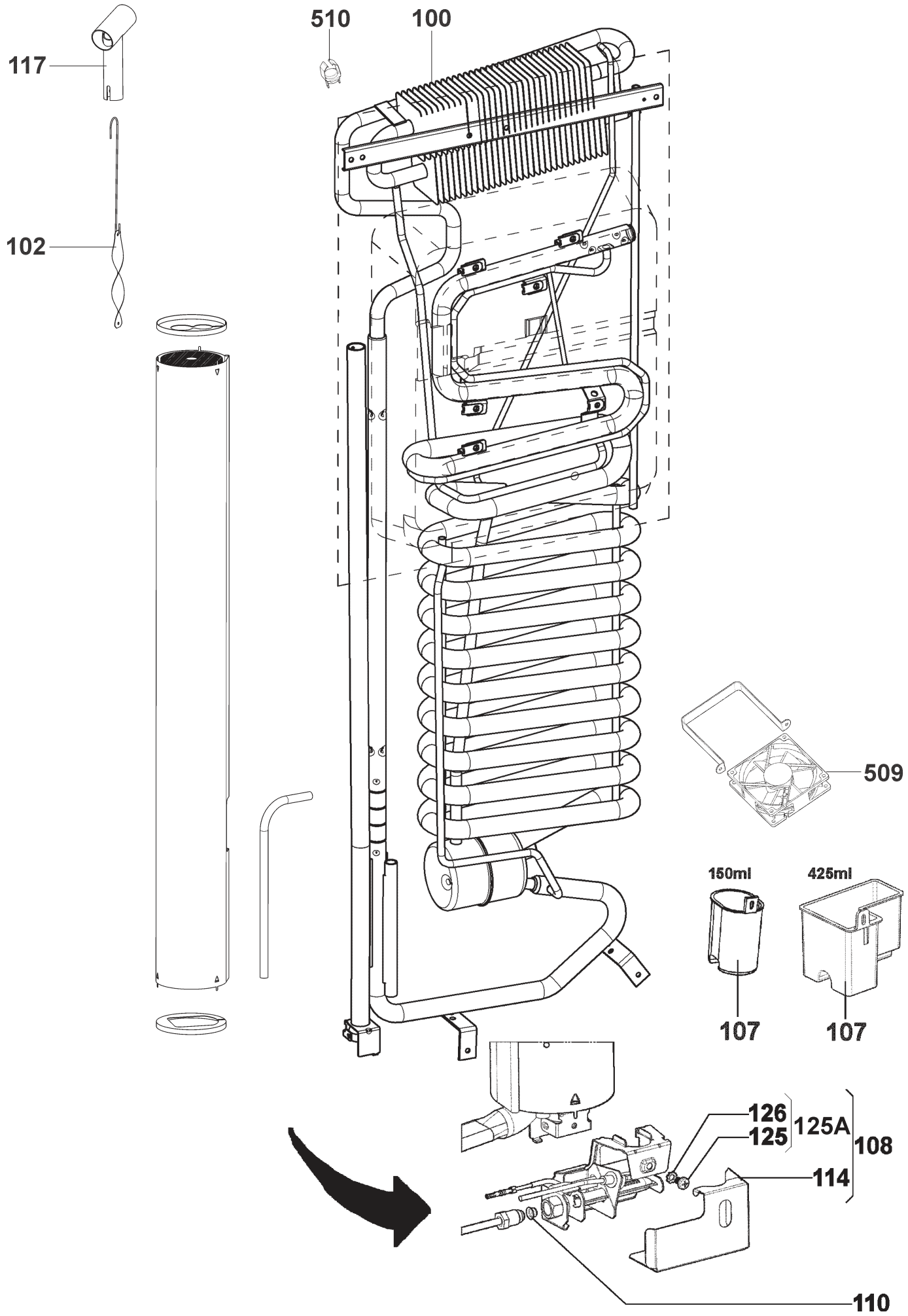

Nur die im Text aufgeführten Ersatzteile sind tatsächlich im Produkt
Only the spare parts which are listed are really in the product

Exploded view no.: P2RML8330AG
P00033081381

Matrix	PNC	ELC	ProdDate	Model
A	921084497	00	20140115	RML8330
B	921084995	00	20140618	RML8330

Pos	Part No.	Matrix	Description
100	2890129055	A B	Cooling unit,service
107	2923320002	A B	Evaporation tray,150ml
108	2890567916	A B	Gas burner,complete,CBS1A, PIEZO
110	2890483114	A B	Nozzle,KZ16
114	2890380500	A B	Cover,gas burner
117	2952444400	A B	T-piece,complete,L=75mm
125A	2952461602	A B	Fixing,burner,10screws, 10washers
509	2106511823	A B	Ventilator,complete,12V DC
510	2412906204	A B	Thermostat,for,ventilator

© Dometic Corporation

Old lighting till October 2015

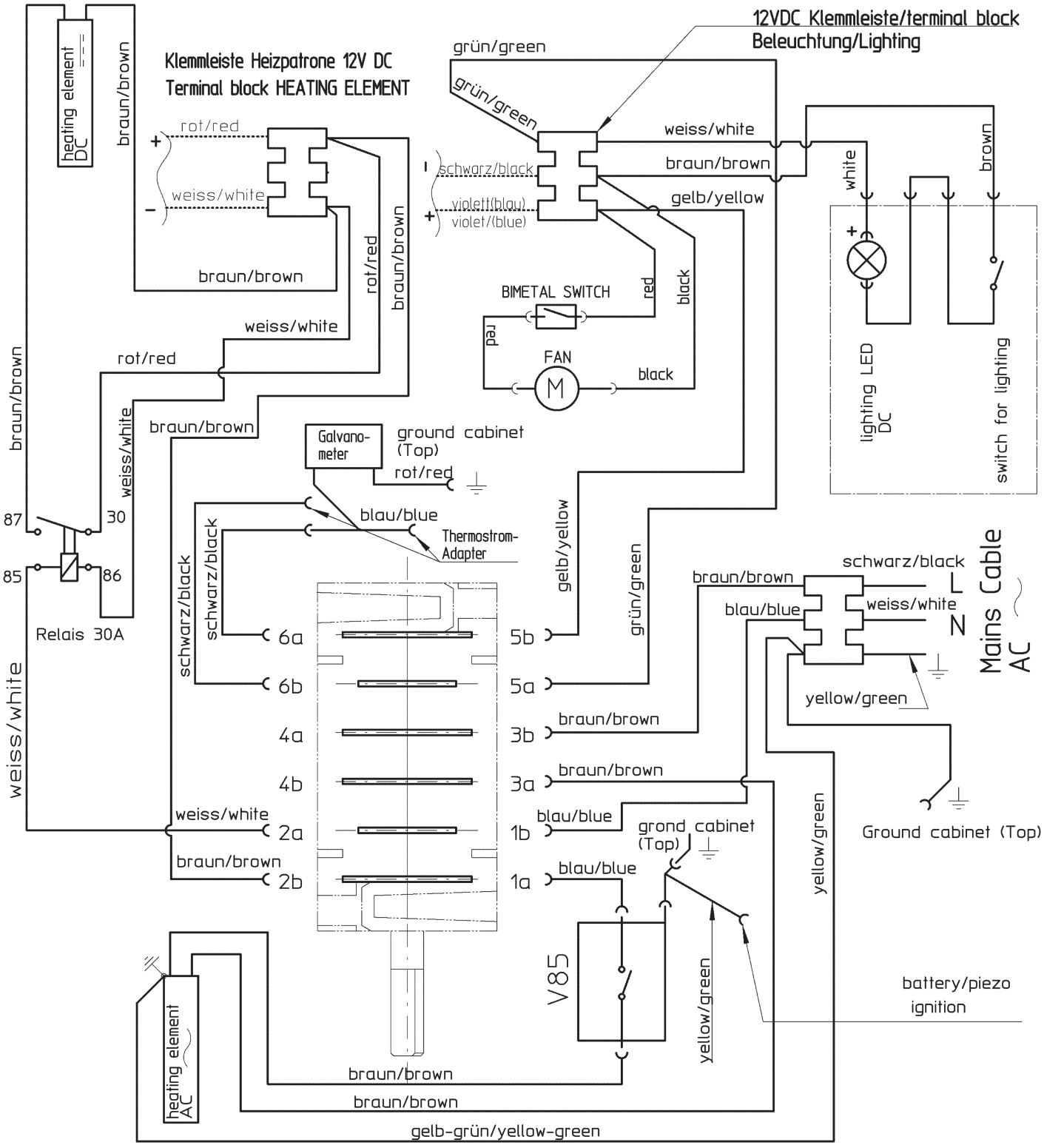

© Dometic Corporation

P241217965

Anschlusskabel	Power cable
Batterie	Battery
Beleuchtung	Lighting
Blau	Blue
Braun	Brown
Erdung	Earth
Gelb-Grün	Yellow/Green
Heizelement	Heating element
Klemmleiste	Earth clamps
Lüfter	Fan
Relais	Relay
Rot	Red
Schalter	Switch
Schwarz	Black
Thermostromadapter	Thermocouple Adapter
Violett	Violet
Weiss	White
Gelb	Yellow

© Dometic Corporation

New lighting from October 2015

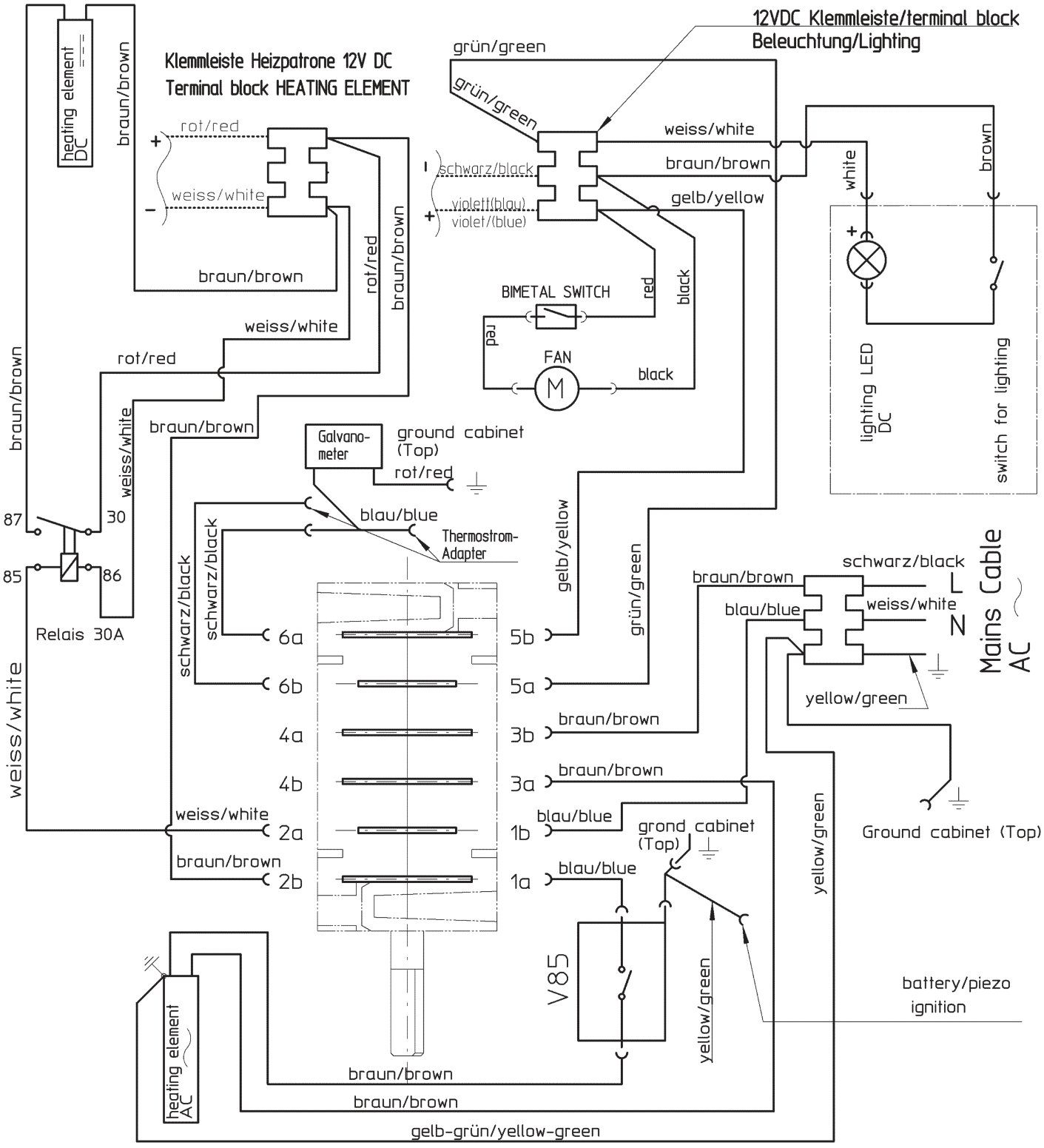

© Dometic Corporation