Dometic

Dometic
Spare parts list

When ordering parts, always state:
MODEL NO. - PRODUCT NO. - QUANTITY -
PART NO. - DESCRIPTION
For electric details also state:
VOLTAGE - WATTAGE
Add a 0 in front of part numbers with less than 10 digits

Recreational Vehicle Refrigerator

PNC	Voltage	Brand	Model	Door	Market
921087791	120V/ 60Hz AC	Dometic	RM8505L2F	Left	CA - US

SERVICE OFFICE
USA
Dometic, LLC
2320 Industrial Parkway
Elkhart, IN 46516
574-294-2511

CANADA
Dometic, LLC
46 Zatonski, Unit3
Brantford, ON N3T 5L8
CANADA
519-720-9578

For Service Center Assistance, Call:
800-544-4881

Publication-No.
599745674
2011/08/15

© Dometic, LLC

Product specification 92108779100 RM8505

Technical features

Width	20.59 in
Height	32.32 in
Depth	22.36 in
Weight	30 kg

Heating element

Voltage	120 V/ 60Hz AC
Performance	135 W
Voltage	12 V/Hz DC
Performance	130 W

Electronics

Temperature	32/41/50/59/68/77 °F
Resistance	27.7/22.29/18.07/14.74/12.11/10 kOhm

Door stopper

Left

© Dometic, LLC

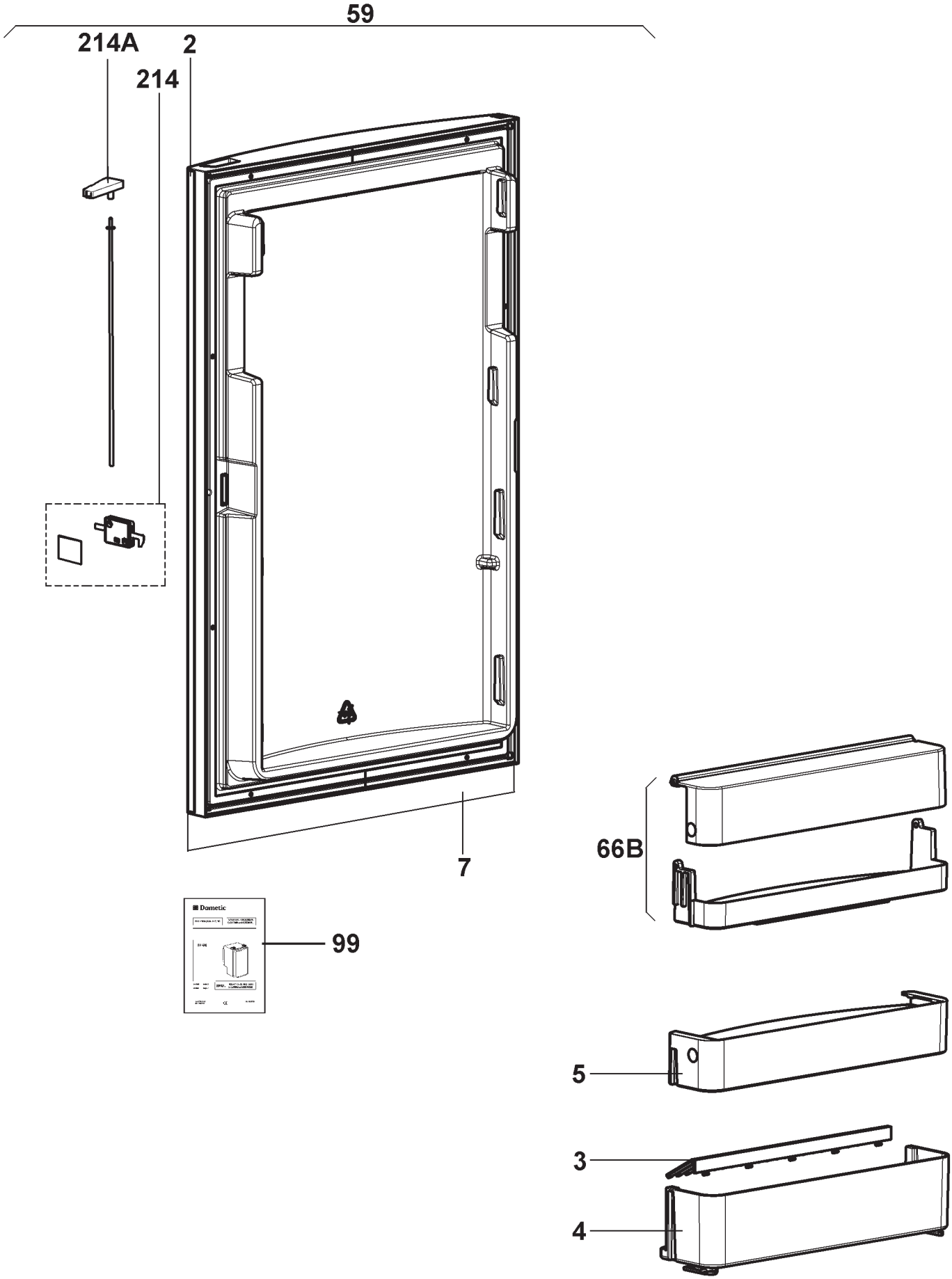

Only the spare parts which ale listed are really in the product.

(PRM8400T4)

© Dometic, LLC

Exploded view no.: PRM8400T4
P00003046417

Matrix	PNC	ELC	ProdDate	Model
A	921087791	00	20110727	RM8505L2F

Pos	Part No.	Matrix	Description
002	2413338621	A	Cover ledge,door,black/grey
003	2951237029	A	Bottle-retainer,blue,L=300 mm
004	2413341005	A	Shelf,bottles,blue,L=411,5mm
005	2413342003	A	Shelf,middle,blue,L=410,5mm
007	2890238575	A	Decoration plate,silver,RAL 9006
059	2890264076	A	Door,complete,service,519x751,5mm
066B	2413938008	A	Shelf,upper,complete,L=411,5mm
099	8226101130	A	User manual,RM 8XXX, USA/Canada
214	2412126308	A	Door lock,door,service
214A	2413260221	A	Button,door lock,doorhang left,RAL 7021

© Dometic, LLC

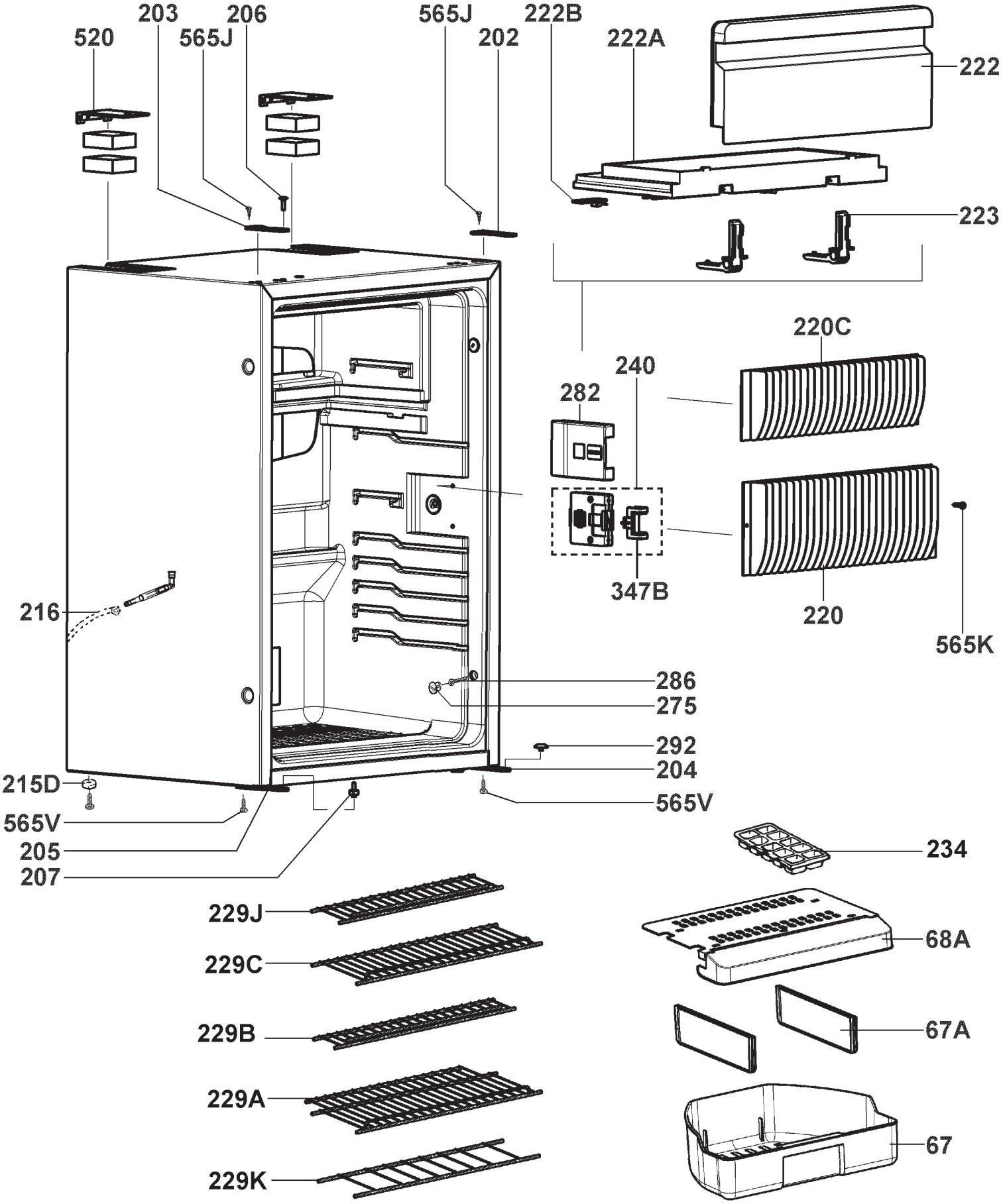

Only the spare parts which ale listed are really in the product.

© Dometic, LLC

Exploded view no.: PRM8400G4
P00013046418

Matrix	PNC	ELC	ProdDate	Model
A	921087791	00	20110727	RM8505L2F

Pos	Part No.	Matrix	Description
067	2413367000	A	Crisper,transparent,blue
067A	2413377207	A	Divider,crisper
068A	2413956000	A	Cover,crisper,service
203	2412097202	A	Hinge,upper left,chrome plated
204	2412098101	A	Hinge,lower right,chrome plated
205	2412099109	A	Hinge,lower left,chrome plated
206	2924892009	A	Bolt,hinge,upper,L=17,5mm
207	2926265204	A	Bolt,hinge,chrome plated,L=21,5
215D	2923297028	A	Foot,complete,black,D=18x8mm
216	2923346247	A	Drain hose,D=8/1x885mm
220	2412948370	A	Rear-evaporator,refrigerator
220C	2412948388	A	Rear-evaporator,freezer compartment
222	2412195311	A	Freezer flap door,L=430mm
222A	2413339009	A	Bottom,freezer compartment,L=442mm
222B	2413327202	A	Slider,for,freezer compartment
223	2412125011	A	Hinge,complete,freezer compartment
229C	2413375508	A	Grating,upper,zinc-plated,462,5x165mm
229J	2413399102	A	Grating,freezer compartment,zinc-plated,105x417mm
229K	2413381704	A	Grating,crisper,Cover,462,5x136mm
234	2951132006	A	Ice tray,PLASTIC
240	2413267416	A	Door lock,lighting,cabinet,left hang
275	2951221056	A	Cover cap,S0510R80B
282	2413268018	A	Cover,door lock,lighting
286	2926544004	A	Bolt,Spax, 4x17
292	2412743110	A	Cap,hinge,NCS S 4502-Y GL
347B	2413271012	A	Receptor,lock tab
520	2412095008	A	Canopy,cable grommet,black
565J	7296342012	A	Screw,ST4,2x13 FZ
565K	2951230008	A	Lens screw,Torx B4,8x19
565V	2924417021	A	Countersunk screw,C3,9x13

© Dometic, LLC

GAS EQUIPMENT

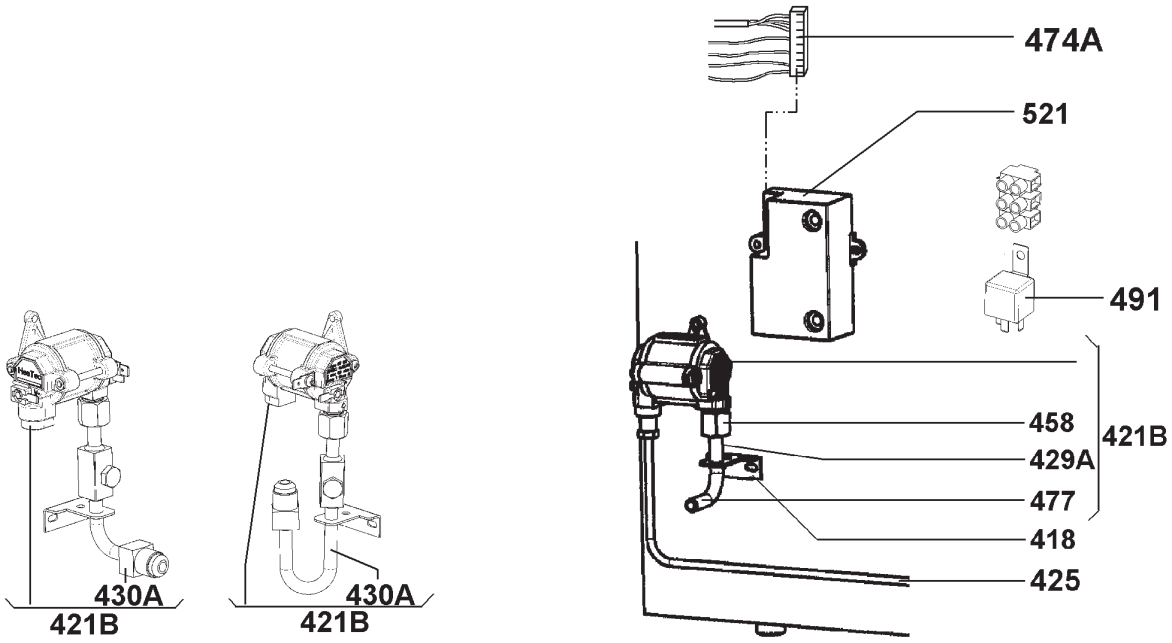

ELECTRO EQUIPMENT

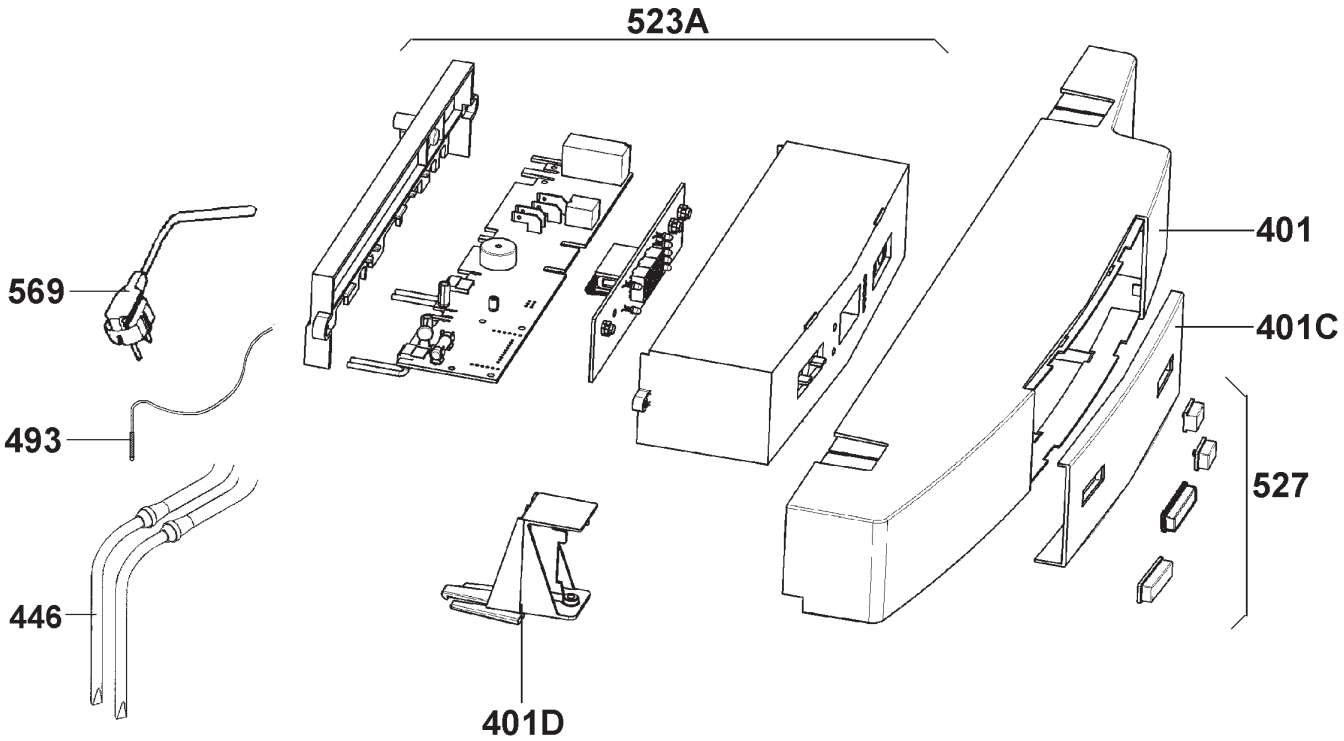

Only the spare parts which ale listed are really in the product.

(PRM8405A4)

© Dometic, LLC

Exploded view no.: PRM8405A4
P00023046420

Matrix	PNC	ELC	ProdDate	Model
A	921087791	00	20110727	RM8505L2F

Pos	Part No.	Matrix	Description
-	2412796100	A	Connection wiring,12V, Solar, D+
401	2413355021	A	Control panel,doorhang left,black/grey,RM/S 85x1/5, L=
401C	2413358603	A	Operating panel,transparent,RM 8xx5, AES
401D	2413193703	A	Retainer,Control panel,black/grey
418	2926202009	A	Bracket,for,gas connection
421B	2412798338	A	Gas valve,with,gas connection,USA
425	2412593572	A	Gas inlet pipe,complete,D=4,75/0,7 x 509 mm
430A	2413986064	A	Gas connection,complete,USA
446	2951694302	A	Heater,service,12V/130W
446	2952170559	A	Heater,120V/135W, USA
458	2927903100	A	Union nut,M14x1,5
474A	2412796308	A	Connection wiring,burner control device,electronic
477	2923191007	A	Filter,for,gas connection
493	2952248504	A	Temperature probe,L=1100mm
521	2412789303	A	Burner control device
523A	2413490208	A	Kit,electronic,AES,RM/S/L8xx5,120V
527	2413933926	A	Push button,Kit,service,black-grey, RAL7021
569	2412840338	A	Connection wiring,black,UL/M, L=1500mm

© Dometic, LLC

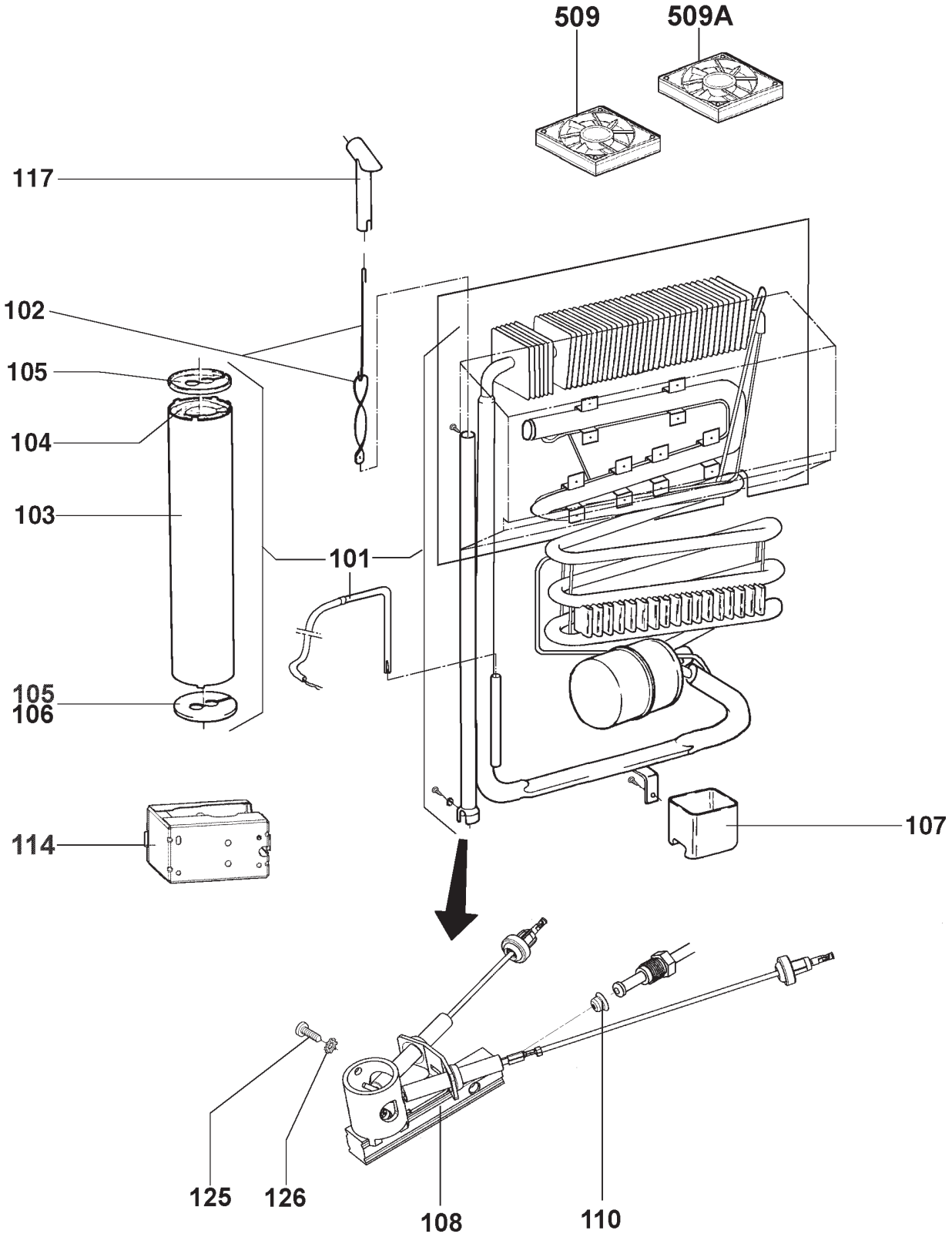

Only the spare parts which are listed are really in the product.

(PRM8401AG1)

© Dometic, LLC

Exploded view no.: PRM8401AG1
P00033046419

Matrix	PNC	ELC	ProdDate	Model
A	921087791	00	20110727	RM8505L2F

Pos	Part No.	Matrix	Description
-	2412906204	A	Thermostat,for,ventilator
101	2890218049	A	Cooling unit,service,135W, USA
102	2926212206	A	Helix,complete,L=259mm
103	2924082304	A	Mantle,cooker,0,25x285x498mm
104	2926680113	A	Cooker insulation,230x480mm
105	2924979004	A	Bezel,cooker,mantle
107	2926019304	A	Evaporation tray,nature
108	2412802817	A	Burner,without,nozzle,Service
110	2922033069	A	Nozzle,gas burner,KZ 43
114	2412559664	A	Kit,burner housing,service
117	2952444301	A	T-piece,complete,L=55mm
125	2952435408	A	Lens screw,M4x6
126	2926559036	A	Lock washer,A 4,3
509	2106511815	A	Ventilator,complete,connection wiring,12V DC
509A	2106511823	A	Ventilator,complete,12V DC

© Dometic, LLC

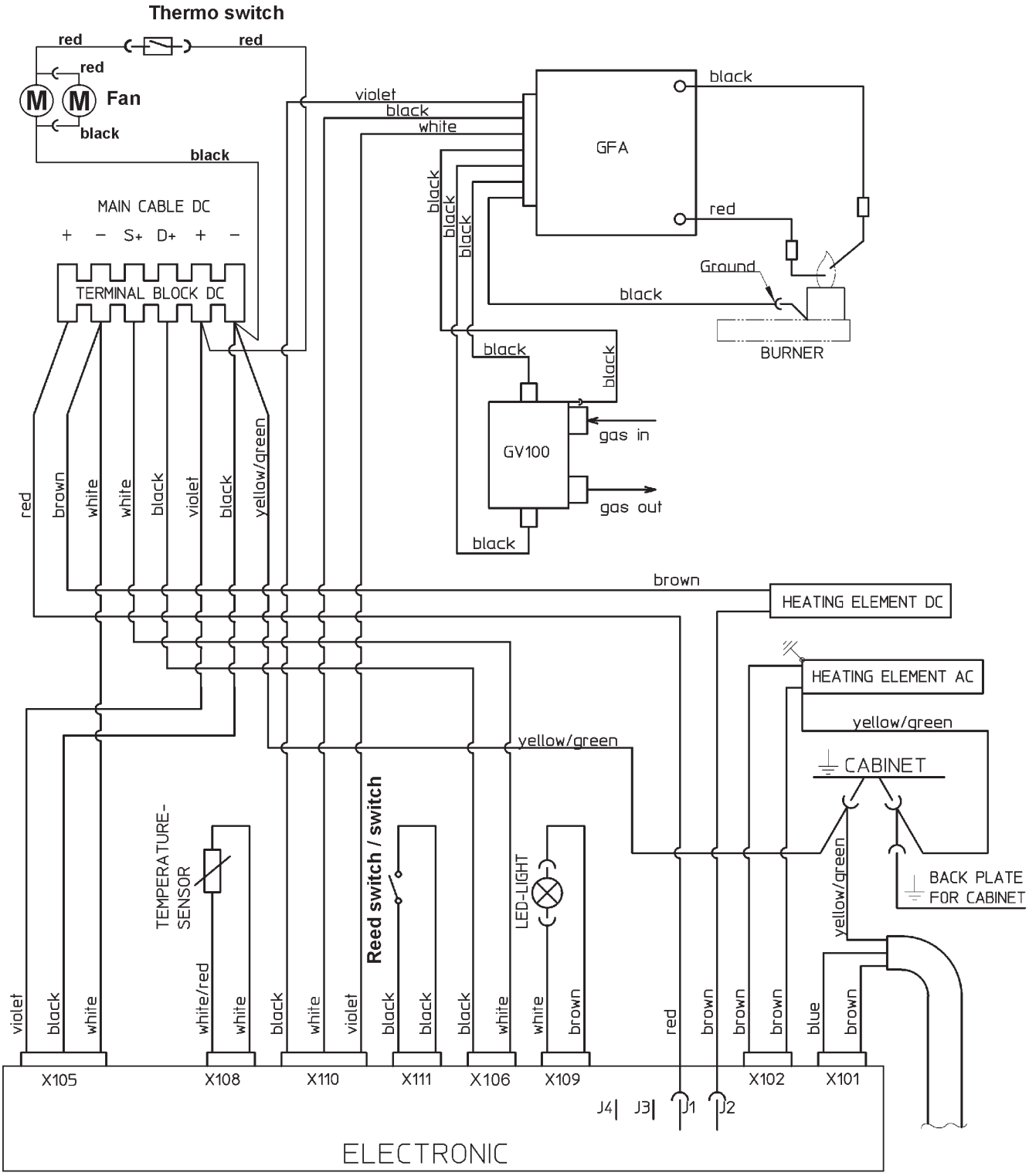

(P241217936EN)