Dometic

Dometic
Spare parts list

When ordering parts, always state:
MODEL NO. - PRODUCT NO. - QUANTITY -
PART NO. – DESCRIPTION
For electric details also state:
VOLTAGE – WATTAGE
Add a 0 in front of part numbers with less than 10 digits

Recreational Vehicle Refrigerator

PNC	Voltage	Brand	Model	Door	Market
921144249	120V/ 60Hz AC	Dometic	RM3762	Left	CA - US
921144250	120V/ 60Hz AC	Dometic	RM3762	Right	CA - US

SERVICE OFFICE
USA
Dometic, LLC
2320 Industrial Parkway
Elkhart, IN 46516
574-294-2511

CANADA
Dometic, LLC
46 Zatonski, Unit3
Brantford, ON N3T 5L8
CANADA
519-720-9578

For Service Center Assistance, Call:
800-544-4881

Publication-No.
599719927
2009/06/17

© Dometic, LLC

Product specification 92114424900 RM3762

Technical features

Width	23-11/16 (Recess) in
Height	53-3/4 (Recess) in
Depth	24 (Recess) in

Heating element

Voltage	120 V/ 60Hz AC
Performance	325 W

Door stopper

Left

© Dometic, LLC

Product specification 92114425000 RM3762

Technical features

Width	23-11/16 (Recess) in
Height	53-3/4 (Recess) in
Depth	24 (Recess) in

Heating element

Voltage	120 V/ 60Hz AC
Performance	325 W

Door stopper

Right

© Dometic, LLC

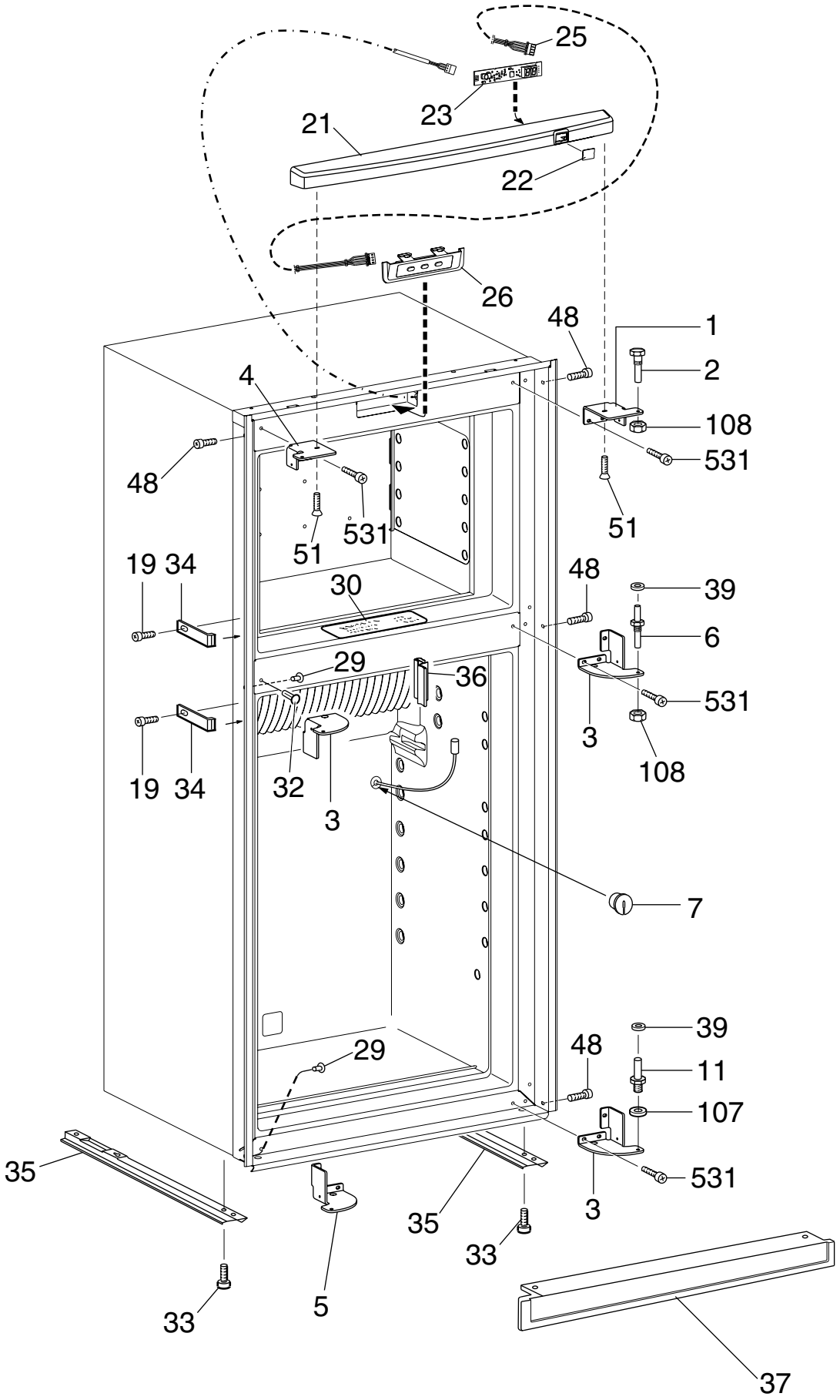

PCMOB3013127

Exploded view no.: PCMOB3013127
P00003013127

Matrix	PNC	ELC	ProdDate	Model
A	921144249	00	20090625	RM3762
B	921144250	00	20090625	RM3762

Pos	Part No.	Matrix	Description
1	3850989025	A B	Hinge,black
2	2932647015	A B	Hinge pin,upper
3	3851187025	A B	Hinge,black
4	3850989017	A B	Hinge,black
5	3851187017	A -	Hinge,black
6	2932648021	A B	Hinge pin,black
7	2002301006	A B	Cover
11	2932649011	A B	Hinge pin,lower
19	3858002052	A B	Screw,zinc-plated,RXS B6X6,5
21	3850968011	A B	Cover,front,black
22	3850970017	A B	Lens
23	3851485015	A B	Pcb,display
25	2954568016	A B	Harness
26	3850964010	A B	Control panel,cpl.
29	2930740077	A B	Cover,black
30	3851035000	A B	Instruction plate
32	3850585039	A B	Plug,black
33	3858039096	A B	Screw,zinc-plated,MRX M5X14
34	2932855014	A B	Fastening bow
35	2932660018	A B	Rail
36	3851088017	A B	Bracket,thermistor
37	2932690049	A B	Base cover,black
39	3858010022	A B	Washer,black,5,5X12X1
48	3858004058	A B	Screw,zinc-plated,MRX M4X4
51	3858071024	A B	Screw,black,ETP 40X14
107	3858010113	A B	Washer,zinc-plated,BRB 6,4X12,5
108	3858009057	A B	Nut,black,ML6 M6
531	3858039047	A B	Screw,zinc-plated,MRX M4X10

© Dometic, LLC

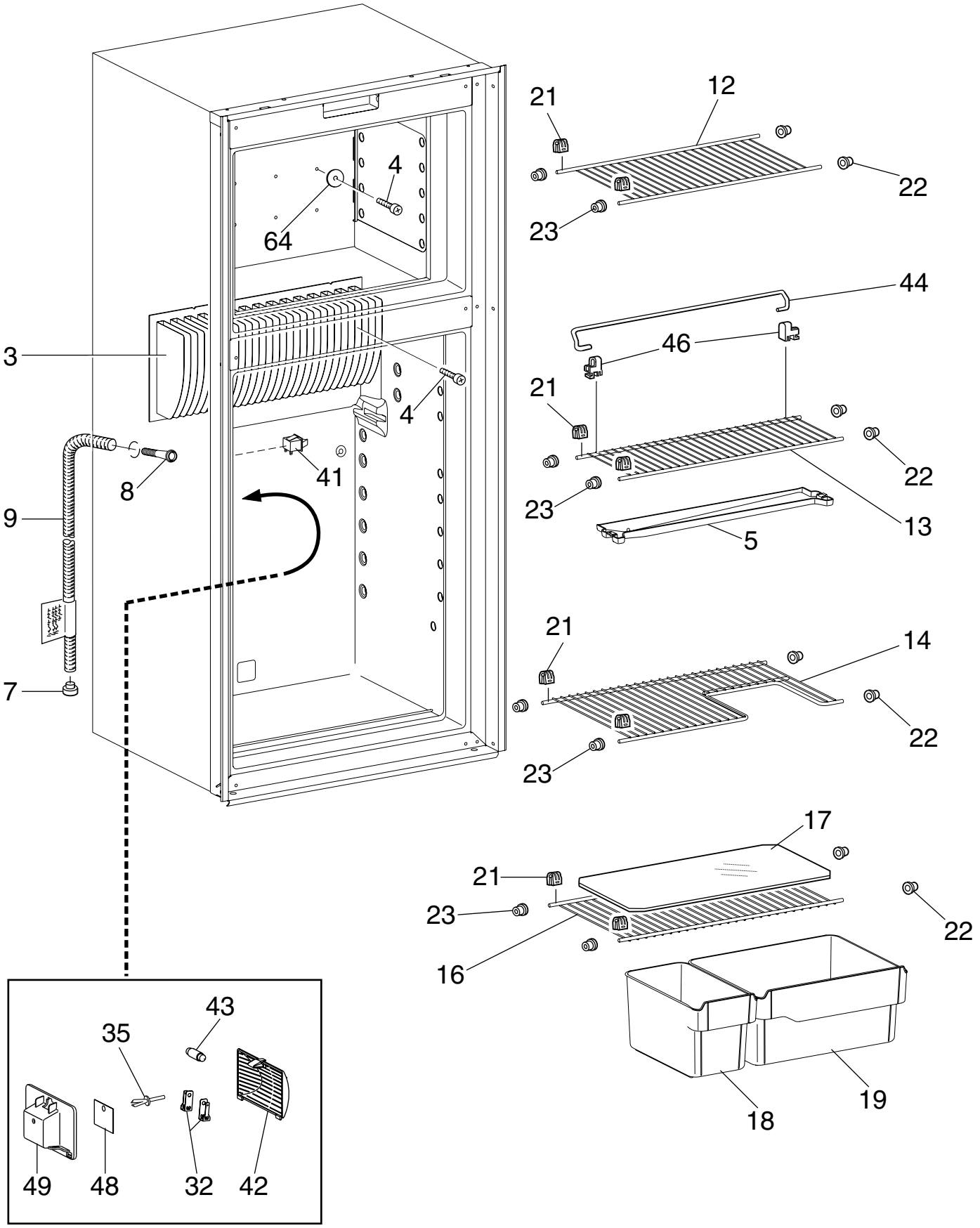

PCMOD3010034

© Dometic, LLC

Exploded view no.: PCMOD3010034
P00003013128

Matrix	PNC	ELC	ProdDate	Model
A	921144249	00	20090625	RM3762
B	921144250	00	20090625	RM3762

Pos	Part No.	Matrix	Description
3	3851121016	A B	Cooling flange
4	3858036019	A B	Screw,zinc-plated,KFXS B10X38
5	3851040026	A B	Drop tray,white
7	2932115013	A B	Discharge pipe,plug
8	3851041016	A B	Drain,pipe
9	2932749019	A B	Drain hose,L=1375mm
12	2932022011	A B	Shelf,wire,white
13	3850994017	A B	Shelf,wire,white
14	3850995014	A B	Shelf,wire,white
16	3850994025	A B	Shelf,wire,white
17	2931117218	A B	Shelf,plate,transparent
18	3850992029	A B	Crisper,small,white
19	3850993027	A B	Crisper,white
21	2932102011	A B	Shelf support
22	2932101013	A B	Plug
23	2932103019	A B	Plug
32	2932108018	A B	Contact pin
35	165521030	A B	Expansion rivet
41	3851000012	A B	Switch
42	3850962014	A B	Lamp glass
43	2007290006	A B	Lamp,10W,12V
44	2007337211	A B	Rack
46	2930693045	A B	Holder
48	3850963012	A B	Reflector
49	3850961016	A B	Lamp housing
64	3858010147	A B	Washer,aluminium,5.2x22x1.5

© Dometic, LLC

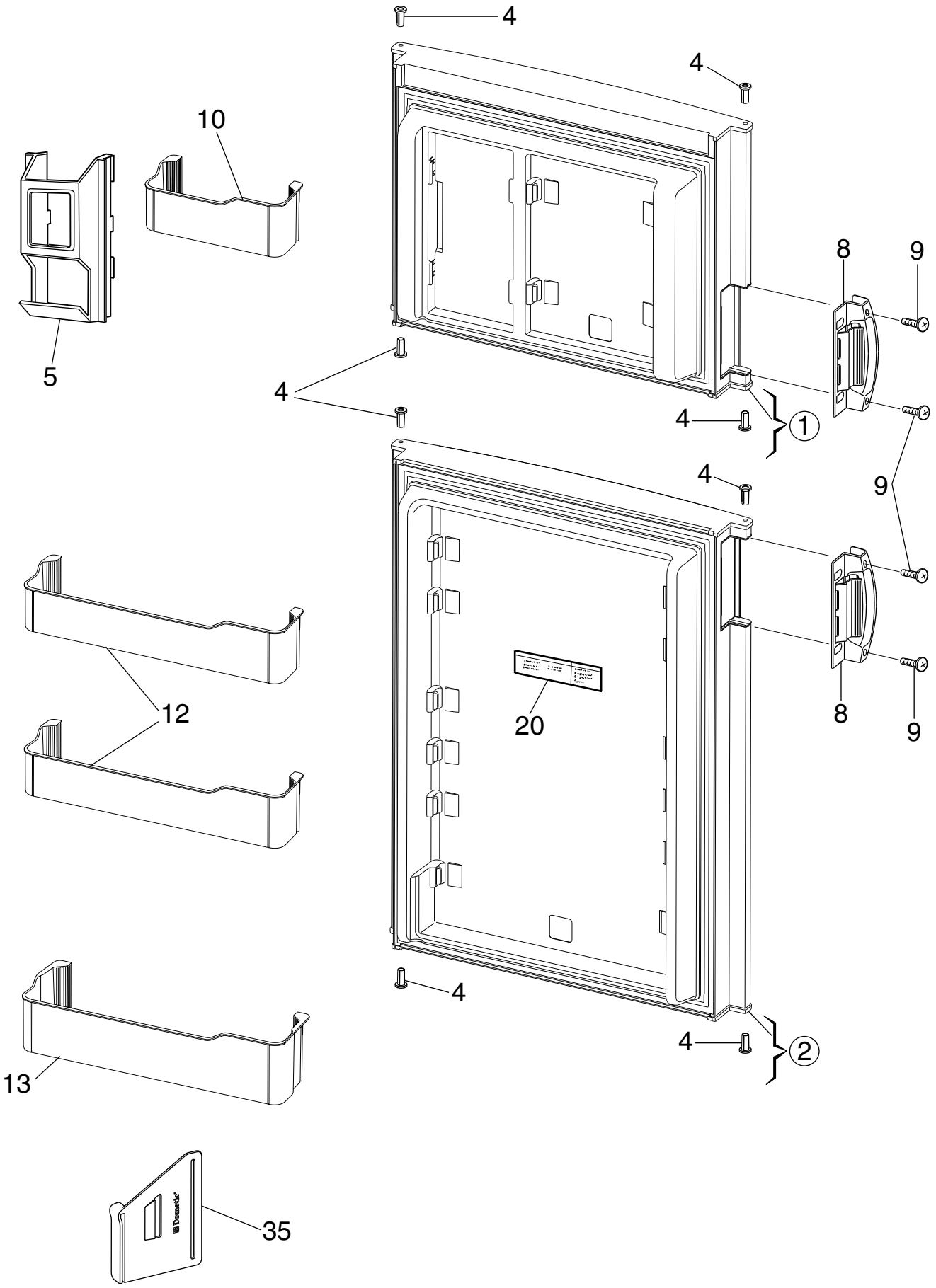

PCMOA3010035

© Dometic, LLC

Exploded view no.: PCMOA3010035
P00003013129

Matrix	PNC	ELC	ProdDate	Model
A	921144249	00	20090625	RM3762
B	921144250	00	20090625	RM3762

Pos	Part No.	Matrix	Description
1	3851002091	A -	Freezer door,left
1	3851002109	- B	Freezer door,right
2	3851003099	A -	Refrigerator door,left
2	3851003107	- B	Refrigerator door,right
4	2931171066	A B	Hinge bushing,black
5	2932578020	A B	Juice container,white
8	3851048011	A B	Handle,black
9	3858089018	A B	Screw,black,EML 5X10
10	3850973029	A B	Door shelf,white
12	3850974027	A B	Door shelf,white
13	3850975024	A B	Door shelf,white
20	3851235006	A B	Label
35	3851206015	A B	Spacer,door

© Dometic, LLC

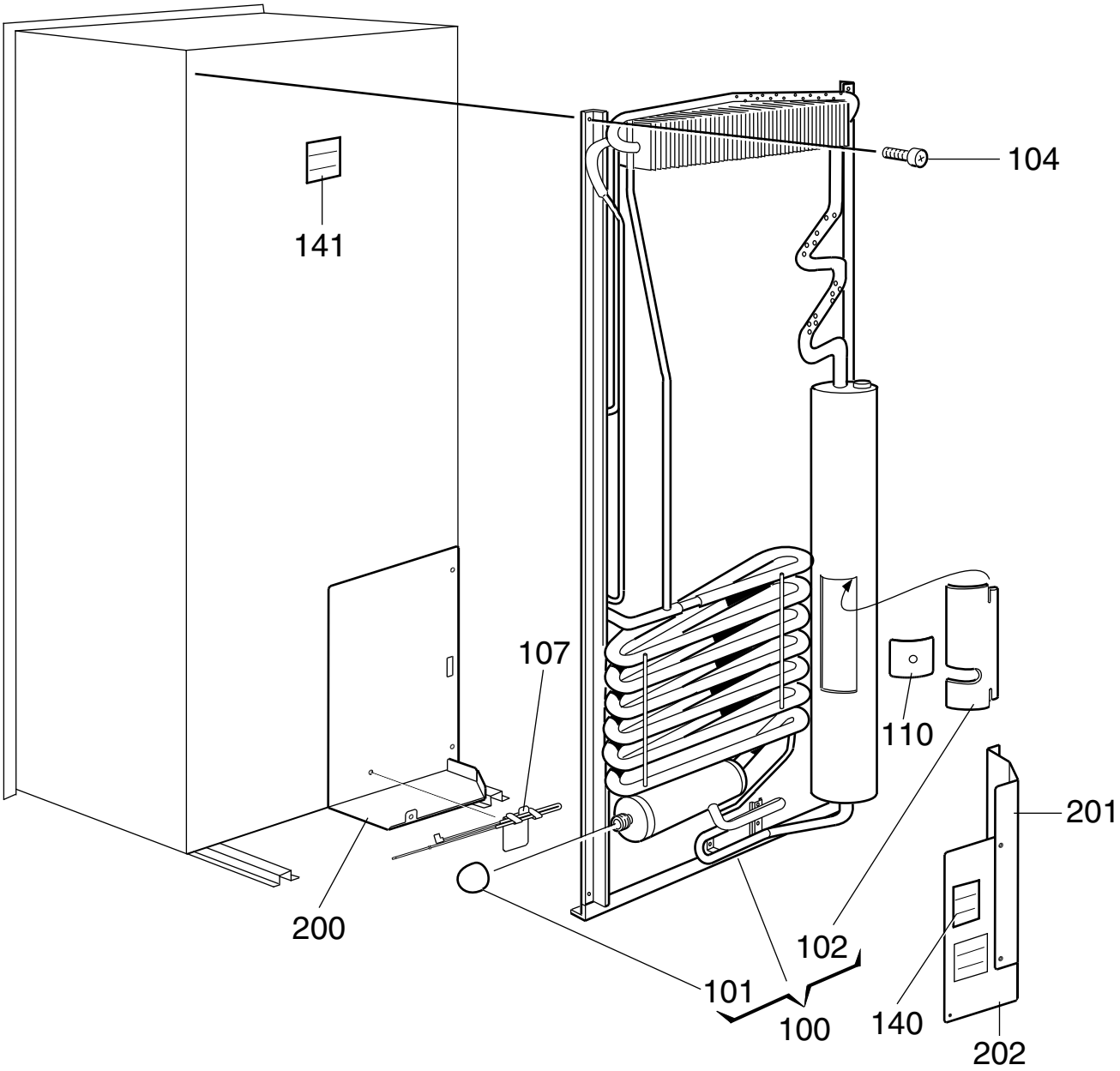

NCMOE2099520

Exploded view no.: NCMOE2099520
P00003013130

Matrix	PNC	ELC	ProdDate	Model
A	921144249	00	20090625	RM3762
B	921144250	00	20090625	RM3762

Pos	Part No.	Matrix	Description
100	2934606118	A B	Cooling unit,with,thermal fuse,606
101	173228008	A B	Cap
102	2933557007	A B	Cover sheet
104	3858068012	A B	Screw,DK 4.8X19
107	3851409023	A B	Thermal fuse,cpl.
110	3851397012	A B	Cover,for,heater
140	3850582002	A B	Label
141	3850583000	A B	Label
200	3851300016	A B	Cover plate
201	3851301014	A B	Cover plate,side
202	3851302012	A B	Cover plate,back
999	8251295021	A B	User manual
			not shown

© Dometic, LLC

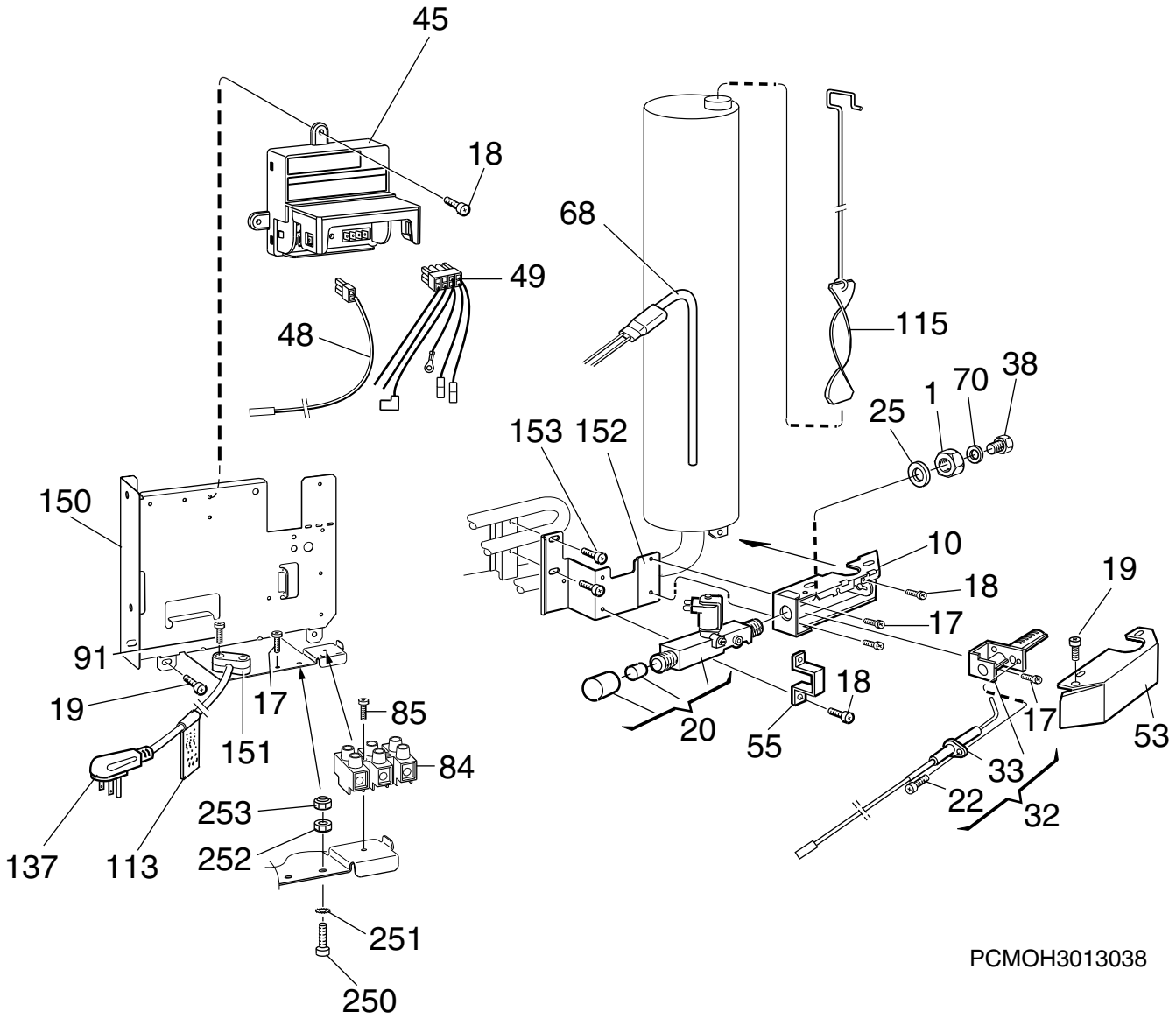
45
18
68
49
48
115
38
70
1
25
153
152
150
10
18
19
17
91
18
19
17
85
20
55
17
53
151
84
33
253
22
32
137
113
252
251
250
PCMOH3013038

Exploded view no.: PCMOH3013038
P00003013131

Matrix	PNC	ELC	ProdDate	Model
A	921144249	00	20090625	RM3762
B	921144250	00	20090625	RM3762

Pos	Part No.	Matrix	Description
1	140207044	A B	Nut
10	2932603018	A B	Burner housing
17	3858039039	A B	Screw,zinc-plated,MRX M4X8
18	3858039047	A B	Screw,zinc-plated,MRX M4X10
19	3858002144	A B	Screw,zinc-plated,RXS B6X9,5
20	2932615012	A B	Solenoid valve
22	3858005014	A B	Screw,zinc-plated,RXK B6X9,5
25	3858010071	A B	Washer,12,5X18,5X1
32	2930697079	A B	Burner,with,conductor
33	2932781012	A B	Electrode,with,conductor
38	2007419217	A B	Jet,complete,no. 58
45	3851331011	A B	Power,module
48	3851059034	A B	Conductor,thermistor
49	2954607012	A B	Conductor,solenoid valve
53	2932661016	A B	Cover
55	2932662014	A B	Bracket
68	3850644612	A B	Heater,325W, 120V
70	2007457001	A B	Washer,0,5mm
84	3858022027	A B	Terminal block
85	3858002185	A B	Screw,zinc-plated,RXS B6X25
91	3858002177	A B	Screw,zinc-plated,RXS B6X19
113	2932733005	A B	Label
115	2932667039	A B	Flame spreader
137	2002699219	A B	Cord set
150	3851474019	A B	Bracket
151	561014010	A B	Cable clamp
152	3850377015	A B	Retainer,solenoid valve
153	3858018017	A B	Screw,zinc-plated,M5X25
250	3858004033	A B	Screw,zinc-plated,MRX M4X16
251	3858011012	A B	Lock washer,zinc-plated,4,3X8
252	3858009016	A B	Hexagon nut,zinc-plated,M4X3,2
253	3858028024	A B	Lock nut,zinc-plated,M4

© Dometic, LLC

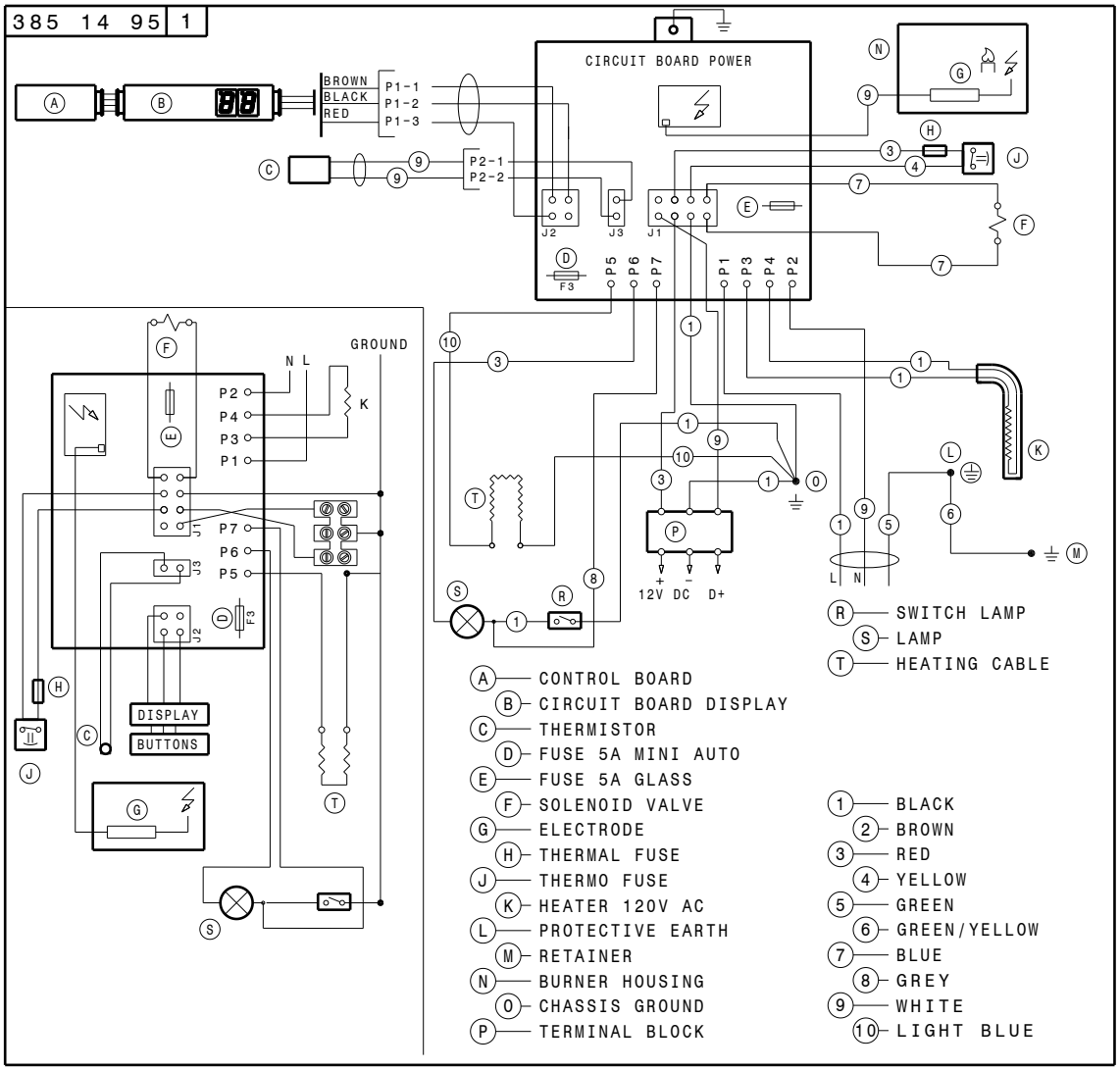
385 14 95 1
CIRCUIT BOARD POWER
BROWN
BLACK
RED
P1-1
P1-2
P1-3
P2-1
P2-2
J2
J3
J1
F3
P5
P6
P7
P1
P3
P4
P2
GROUND
N L
K
DISPLAY
BUTTONS
12V DC
D+
L N
R — SWITCH LAMP
S — LAMP
T — HEATING CABLE
A — CONTROL BOARD
B — CIRCUIT BOARD DISPLAY
C — THERMISTOR
D — FUSE 5A MINI AUTO
E — FUSE 5A GLASS
F — SOLENOID VALVE
G — ELECTRODE
H — THERMAL FUSE
J — THERMO FUSE
K — HEATER 120V AC
L — PROTECTIVE EARTH
M — RETAINER
N — BURNER HOUSING
O — CHASSIS GROUND
P — TERMINAL BLOCK
1 — BLACK
2 — BROWN
3 — RED
4 — YELLOW
5 — GREEN
6 — GREEN/YELLOW
7 — BLUE
8 — GREY
9 — WHITE
10 — LIGHT BLUE

P38514951