Dometic

**Dometic**
**Spare parts list**

When ordering parts, always state:
MODEL NO. - PRODUCT NO. - QUANTITY -
PART NO. – DESCRIPTION
For electric details also state:
VOLTAGE – WATTAGE
Add a 0 in front of part numbers with less than 10 digits

# Recreational Vehicle Refrigerator

| PNC | Voltage | Brand | Model | Door | Market |
|---|---|---|---|---|---|
| 921144317 | 120V/ 60Hz AC | Dometic | DM2662 | Left | CA - US |
| 921144318 | 120V/ 60Hz AC | Dometic | DM2662 | Right | CA - US |



**SERVICE OFFICE**
**USA**
Dometic, LLC
2320 Industrial Parkway
Elkhart, IN 46516
574-294-2511

**CANADA**
Dometic, LLC
46 Zatonski, Unit3
Brantford, ON N3T 5L8
CANADA
519-720-9578

**For Service Center Assistance, Call:**
800-544-4881

Publication-No.
599719868
2009/06/15

© Dometic, LLC

# Product specification 92114431700 DM2662

**Technical features**

| | |
|---|---|
| Width | 23-11/16 (Recess) in |
| Height | 53-3/4 (Recess) in |
| Depth | 24 (Recess) in |

**Heating element**

| | |
|---|---|
| Voltage | 120 V/ 60Hz AC |
| Performance | 325 W |

**Door stopper**

Left

© Dometic, LLC

## Product specification 92114431800 DM2662

**Technical features**

| | |
|---|---|
| Width | 23-11/16 (Recess) in |
| Height | 53-3/4 (Recess) in |
| Depth | 24 (Recess) in |

**Heating element**

| | |
|---|---|
| Voltage | 120 V/ 60Hz AC |
| Performance | 325 W |

**Door stopper**

Right

© Dometic, LLC

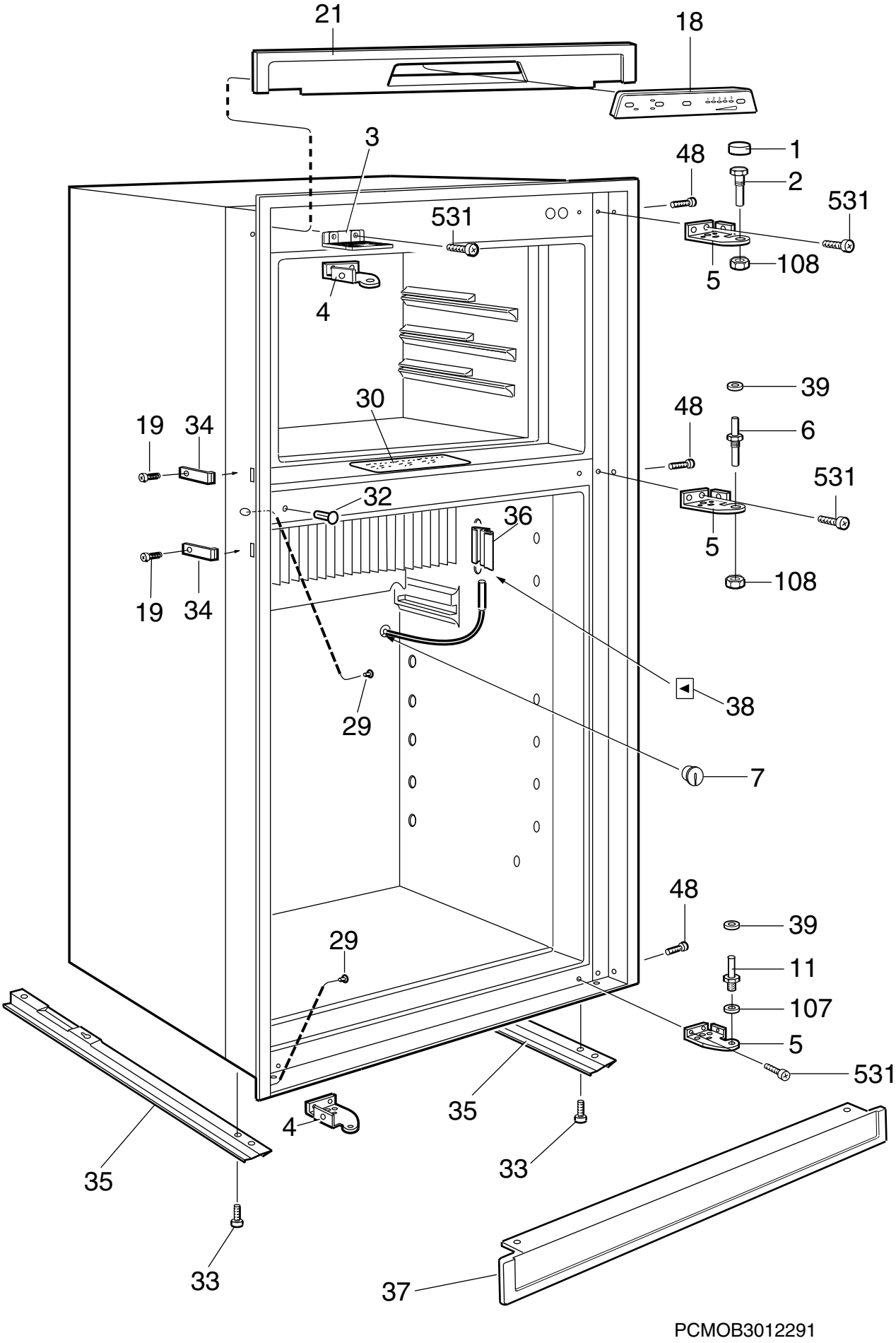
21
18
3
48
1
2
531
531
108
5
4
39
30
48
6
19
34
531
32
36
5
19
34
108
38
29
7
48
39
29
11
107
5
531
35
4
33
35
33
37
PCMOB3012291

© Dometic, LLC

Exploded view no.: PCMOB3012291
P00003013090

| Matrix | PNC | ELC | ProdDate | Model |
|---|---|---|---|---|
| A | 921144317 | 00 | 20090622 | DM2662 |
| B | 921144318 | 00 | 20090618 | DM2662 |

| Pos | Part No. | Matrix | Description |
|---|---|---|---|
| 1 | 2932736081 | A B | Cover,black |
| 2 | 2932647015 | A B | Hinge pin,upper |
| 3 | 3851466015 | A B | Bracket,black |
| 4 | 2932643048 | A - | Hinge,black |
| 5 | 2932643030 | A B | Hinge,black |
| 6 | 2932648021 | A B | Hinge pin,black |
| 7 | 2002301006 | A B | Cover |
| 11 | 2932649011 | A B | Hinge pin,lower |
| 18 | 2932884055 | A B | Panel,display board,black |
| 19 | 3858002052 | A B | Screw,zinc-plated,RXS B6X6,5 |
| 21 | 2932641075 | A B | Front,black |
| 29 | 2930740077 | A B | Cover,black |
| 30 | 2932435007 | A B | Instruction plate |
| 32 | 3850585039 | A B | Plug,black |
| 33 | 3858039096 | A B | Screw,zinc-plated,MRX M5X14 |
| 34 | 2932855014 | A B | Fastening bow |
| 35 | 2932660018 | A B | Rail |
| 36 | 3851088017 | A B | Bracket,thermistor |
| 37 | 2932690049 | A B | Base cover,black |
| 38 | 2933180016 | A B | Label |
| 39 | 3858010022 | A B | Washer,black,5,5X12X1 |
| 48 | 3858004058 | A B | Screw,zinc-plated,MRX M4X4 |
| 107 | 3858010113 | A B | Washer,zinc-plated,BRB 6,4X12,5 |
| 108 | 3858009057 | A B | Nut,black,ML6 M6 |
| 531 | 3858039047 | A B | Screw,zinc-plated,MRX M4X10 |
| 999 | 2932750124 | A - | Door reversing kit,left-right,black<br>not shown |
| 999 | 2932750116 | - B | Door reversing kit,right-left,black<br>not shown |

© Dometic, LLC

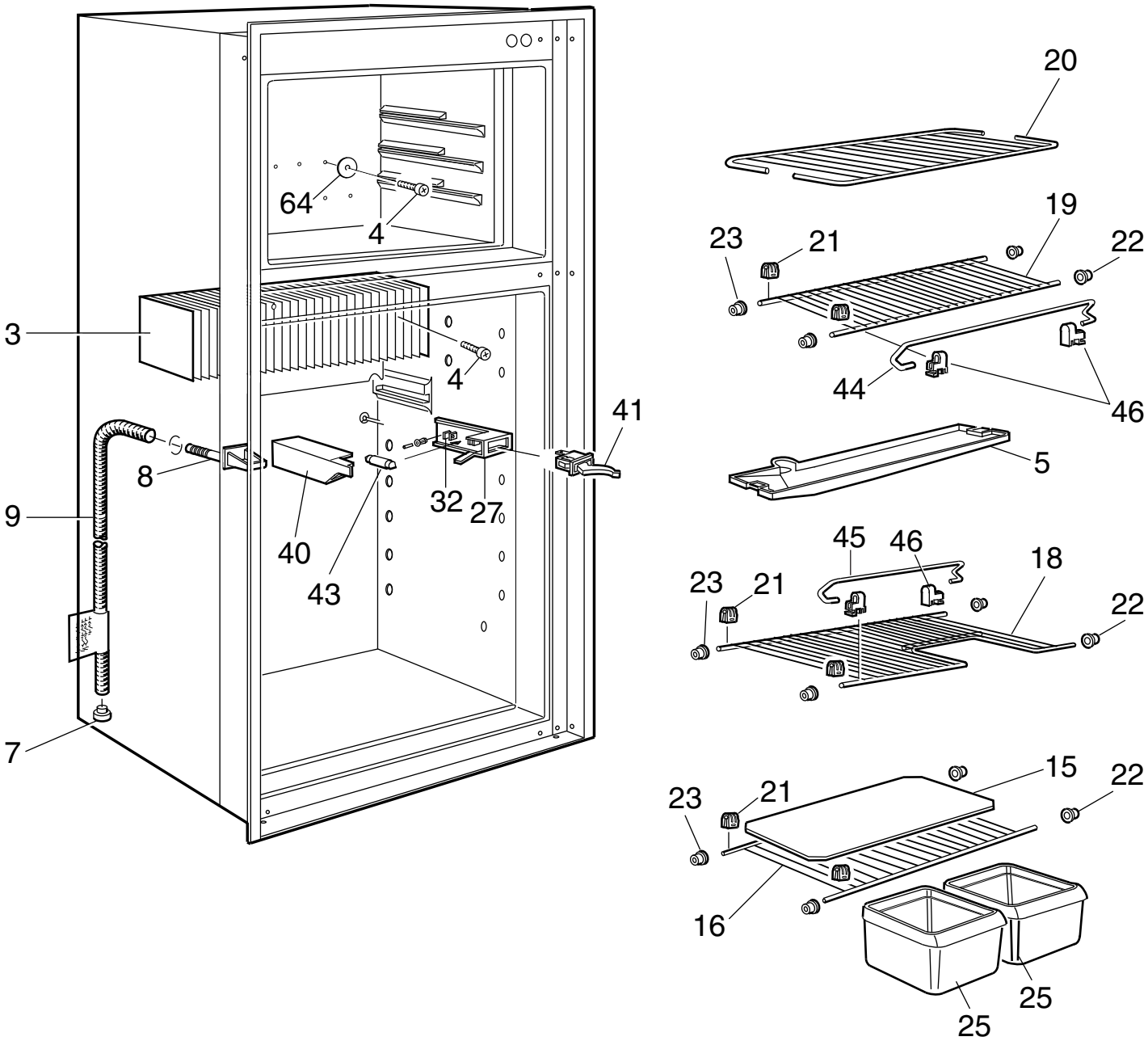


PCMOD3012292

Exploded view no.: PCMOD3012292
P00003013091

| Matrix | PNC | ELC | ProdDate | Model |
|---|---|---|---|---|
| A | 921144317 | 00 | 20090622 | DM2662 |
| B | 921144318 | 00 | 20090618 | DM2662 |

| Pos | Part No. | Matrix | Description |
|---|---|---|---|
| 3 | 2932630011 | A B | Cooling flange |
| 4 | 3858036019 | A B | Screw,zinc-plated,KFXS B10X38 |
| 5 | 2932624014 | A B | Evaporation tray |
| 7 | 2932115013 | A B | Discharge pipe,plug |
| 8 | 2932635010 | A B | Drain |
| 9 | 2932749019 | A B | Drain hose,L=1375mm |
| 15 | 2931117176 | A B | Shelf,plastic,transparent |
| 16 | 3850324025 | A B | Grating shelf |
| 18 | 3850325014 | A B | Grating shelf |
| 19 | 3850324033 | A B | Grating shelf |
| 20 | 2932627025 | A B | Grating shelf,white |
| 21 | 2932102011 | A B | Shelf support |
| 22 | 2932101013 | A B | Plug |
| 23 | 2932103019 | A B | Plug |
| 25 | 2932621077 | A B | Crisper,transparent |
| 27 | 2932523018 | A B | Lampholder |
| 32 | 2932108018 | A B | Contact pin |
| 40 | 2932106012 | A B | Lamp cover |
| 41 | 2932665017 | A B | Switch |
| 43 | 2007290006 | A B | Lamp,10W,12V |
| 44 | 2007337211 | A B | Rack |
| 45 | 2007337120 | A B | Rack |
| 46 | 2930693045 | A B | Holder |
| 64 | 3858010147 | A B | Washer,aluminium,5.2x22x1.5 |

© Dometic, LLC

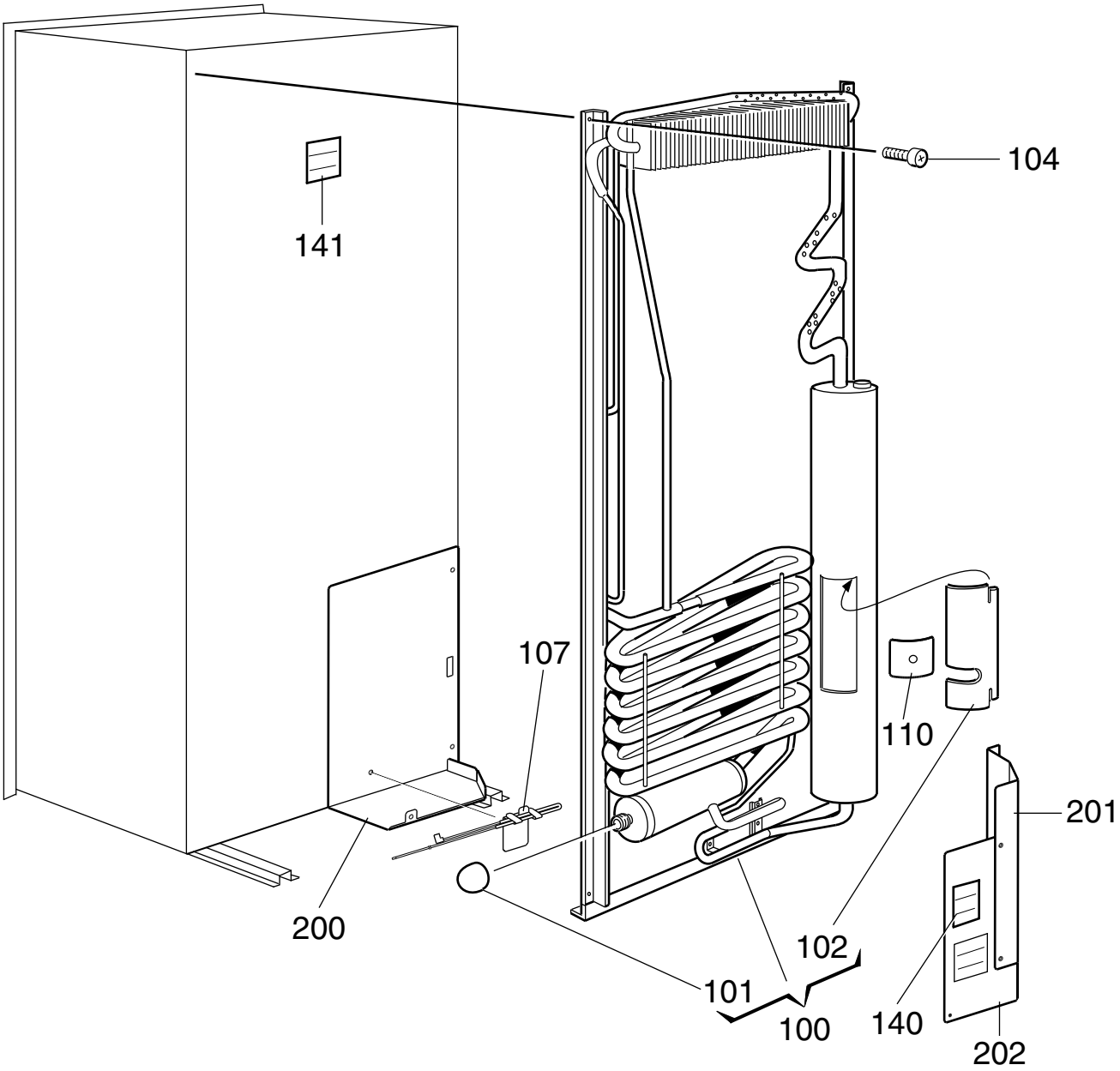


NCMOE2099520

Exploded view no.: NCMOE2099520
P00003013092

| Matrix | PNC | ELC | ProdDate | Model |
|---|---|---|---|---|
| A | 921144317 | 00 | 20090622 | DM2662 |
| B | 921144318 | 00 | 20090618 | DM2662 |

| Pos | Part No. | Matrix | Description |
|---|---|---|---|
| 100 | 2934606100 | A B | Cooling unit,with,thermal fuse,606 |
| 101 | 173228008 | A B | Cap |
| 102 | 2933557007 | A B | Cover sheet |
| 104 | 3858068012 | A B | Screw,DK 4.8X19 |
| 107 | 3851409015 | A B | Thermal fuse,cpl. |
| 110 | 3851397012 | A B | Cover,for,heater |
| 140 | 3850582002 | A B | Label |
| 141 | 3850583000 | A B | Label |
| 200 | 3851300016 | A B | Cover plate |
| 201 | 3851301014 | A B | Cover plate,side |
| 202 | 3851302012 | A B | Cover plate,back |
| 999 | 8251293034 | A B | User manual |
| | | | not shown |

© Dometic, LLC

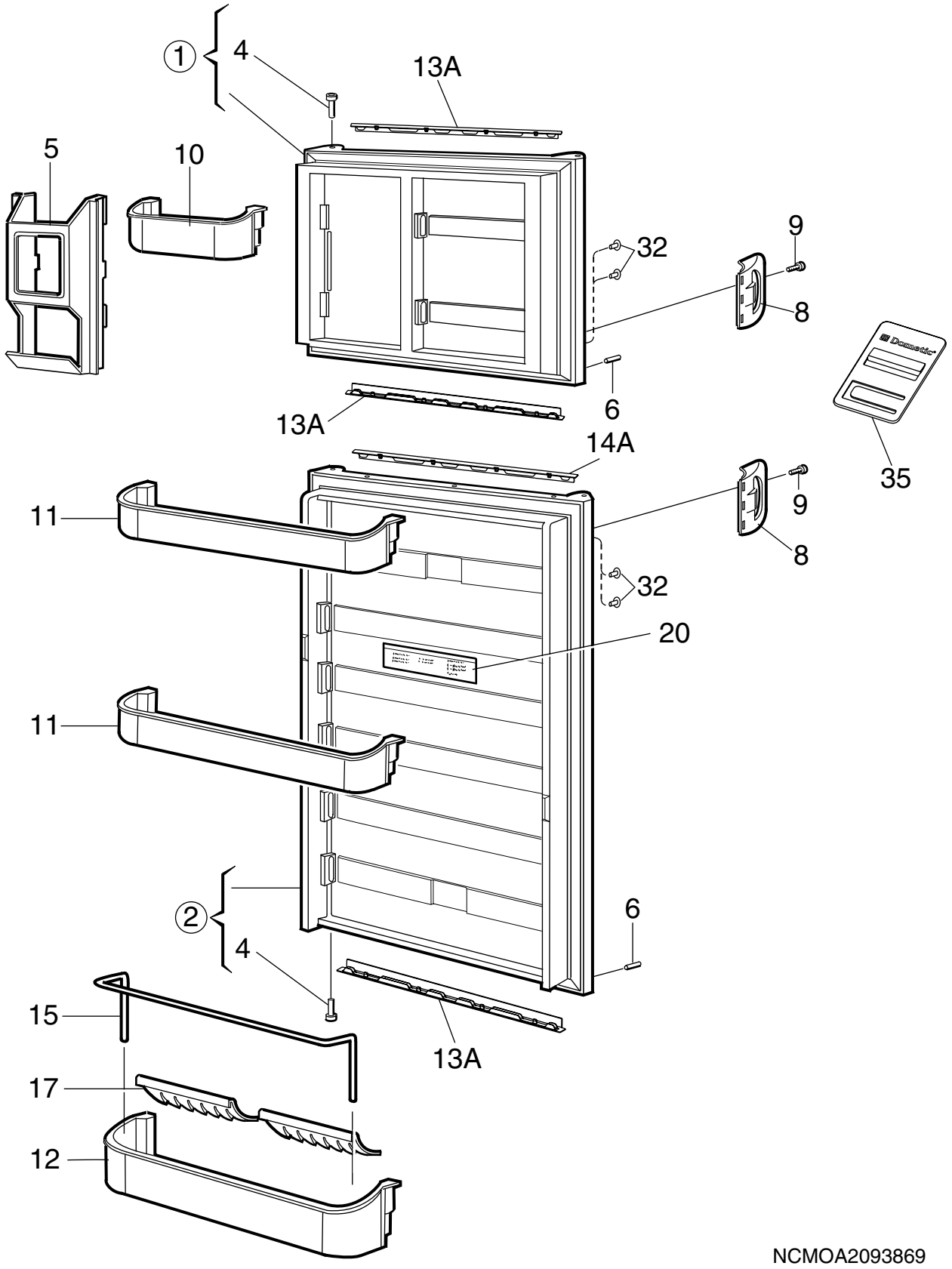
1
4
13A
5
10
9
32
8
6
13A
14A
35
11
9
8
32
20
11
2
6
4
15
13A
17
12
NCMOA2093869

Exploded view no.: NCMOA2093869
P00003013093

| Matrix | PNC | ELC | ProdDate | Model |
|---|---|---|---|---|
| A | 921144317 | 00 | 20090622 | DM2662 |
| B | 921144318 | 00 | 20090618 | DM2662 |

| Pos | Part No. | Matrix | Description |
|---|---|---|---|
| 1 | 2932561208 | A - | Freezer door,left,black |
| 1 | 2932561190 | - B | Freezer door,right,black |
| 2 | 2932563063 | A - | Refrigerator door,left,black |
| 2 | 2932563055 | - B | Refrigerator door,right,black |
| 4 | 2931171066 | A B | Hinge bushing,black |
| 5 | 2932578038 | A B | Juice container,transparent |
| 6 | 2932588011 | A B | Stopper |
| 8 | 3851174023 | A B | Handle,black |
| 9 | 3858000049 | A B | Screw,black,PT 50X26 |
| 10 | 2932577048 | A B | Door shelf,transparent |
| 11 | 2932576065 | A B | Door shelf,transparent |
| 12 | 2932575059 | A B | Door shelf,transparent |
| 13A | 3850919022 | A B | Decoration strip,black |
| 14A | 3850919063 | A B | Decoration strip,black |
| 15 | 2932585033 | A B | Rack |
| 17 | 2932658012 | A B | Bottle holder,white |
| 20 | 3851235006 | A B | Label |
| 32 | 3850625025 | A B | Cover,black |
| 35 | 3850781018 | A B | Spacer,door |

© Dometic, LLC

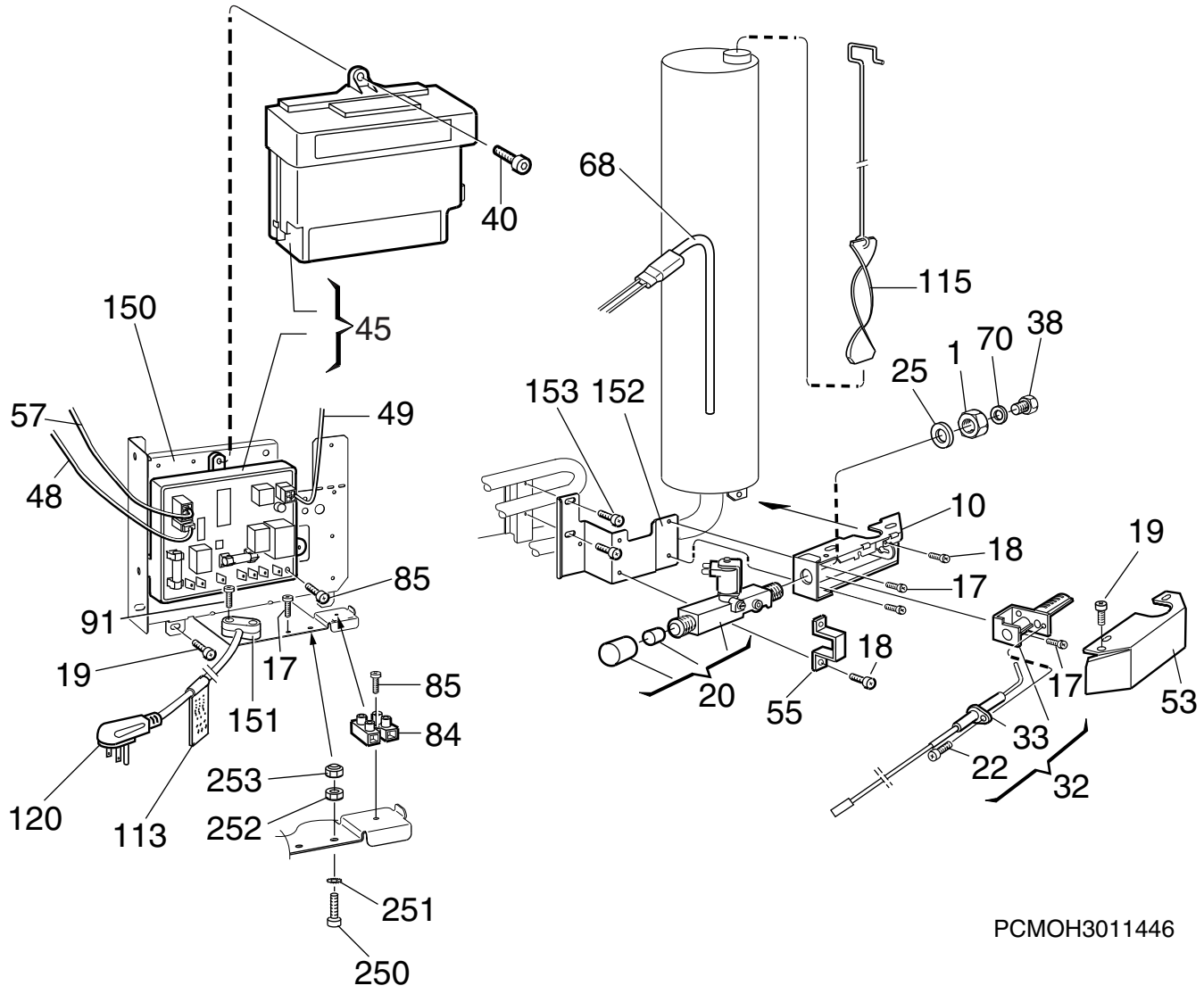
40
68
115
150
45
38
70
1
25
153
152
57
49
48
10
18
19
85
17
91
18
19
17
85
20
55
17
53
151
84
33
253
22
32
120
113
252
251
250
PCMOH3011446

Exploded view no.: PCMOH3011446
P00003013094

| Matrix | PNC | ELC | ProdDate | Model |
|---|---|---|---|---|
| A | 921144317 | 00 | 20090622 | DM2662 |
| B | 921144318 | 00 | 20090618 | DM2662 |

| Pos | Part No. | Matrix | Description |
|---|---|---|---|
| 1 | 140207044 | A B | Nut |
| 10 | 2932603018 | A B | Burner housing |
| 17 | 3858039039 | A B | Screw,zinc-plated,MRX M4X8 |
| 18 | 3858039047 | A B | Screw,zinc-plated,MRX M4X10 |
| 19 | 3858002144 | A B | Screw,zinc-plated,RXS B6X9,5 |
| 20 | 2932615012 | A B | Solenoid valve |
| 22 | 3858005014 | A B | Screw,zinc-plated,RXK B6X9,5 |
| 25 | 3858010071 | A B | Washer,12,5X18,5X1 |
| 32 | 2930697079 | A B | Burner,with,conductor |
| 33 | 2932781012 | A B | Electrode,with,conductor |
| 38 | 2007419217 | A B | Jet,complete,no. 58 |
| 40 | 3858002037 | A B | Screw,zinc-plated,RXS B8, 4,2x13 |
| 45 | 3850712013 | A B | Power,module,integrated |
| 48 | 3851059034 | A B | Conductor,thermistor |
| 49 | 2954539041 | A B | Conductor,solenoid valve |
| 53 | 2932661016 | A B | Cover |
| 55 | 2932662014 | A B | Bracket |
| 57 | 2954542037 | A B | Conductor,PCB |
| 68 | 3850644422 | A B | Heater,325W, 120V |
| 70 | 2007457001 | A B | Washer,0,5mm |
| 84 | 3858022019 | A B | Terminal block |
| 85 | 3858002185 | A B | Screw,zinc-plated,RXS B6X25 |
| 91 | 3858002177 | A B | Screw,zinc-plated,RXS B6X19 |
| 113 | 2932733005 | A B | Label |
| 115 | 2932667039 | A B | Flame spreader |
| 120 | 2002699094 | A B | Cord set |
| 150 | 3851474019 | A B | Bracket |
| 151 | 561014010 | A B | Cable clamp |
| 152 | 3850377015 | A B | Retainer,solenoid valve |
| 153 | 3858018017 | A B | Screw,zinc-plated,M5X25 |
| 250 | 3858004033 | A B | Screw,zinc-plated,MRX M4X16 |
| 251 | 3858011012 | A B | Lock washer,zinc-plated,4,3X8 |
| 252 | 3858009016 | A B | Hexagon nut,zinc-plated,M4X3,2 |
| 253 | 3858028024 | A B | Lock nut,zinc-plated,M4 |

© Dometic, LLC

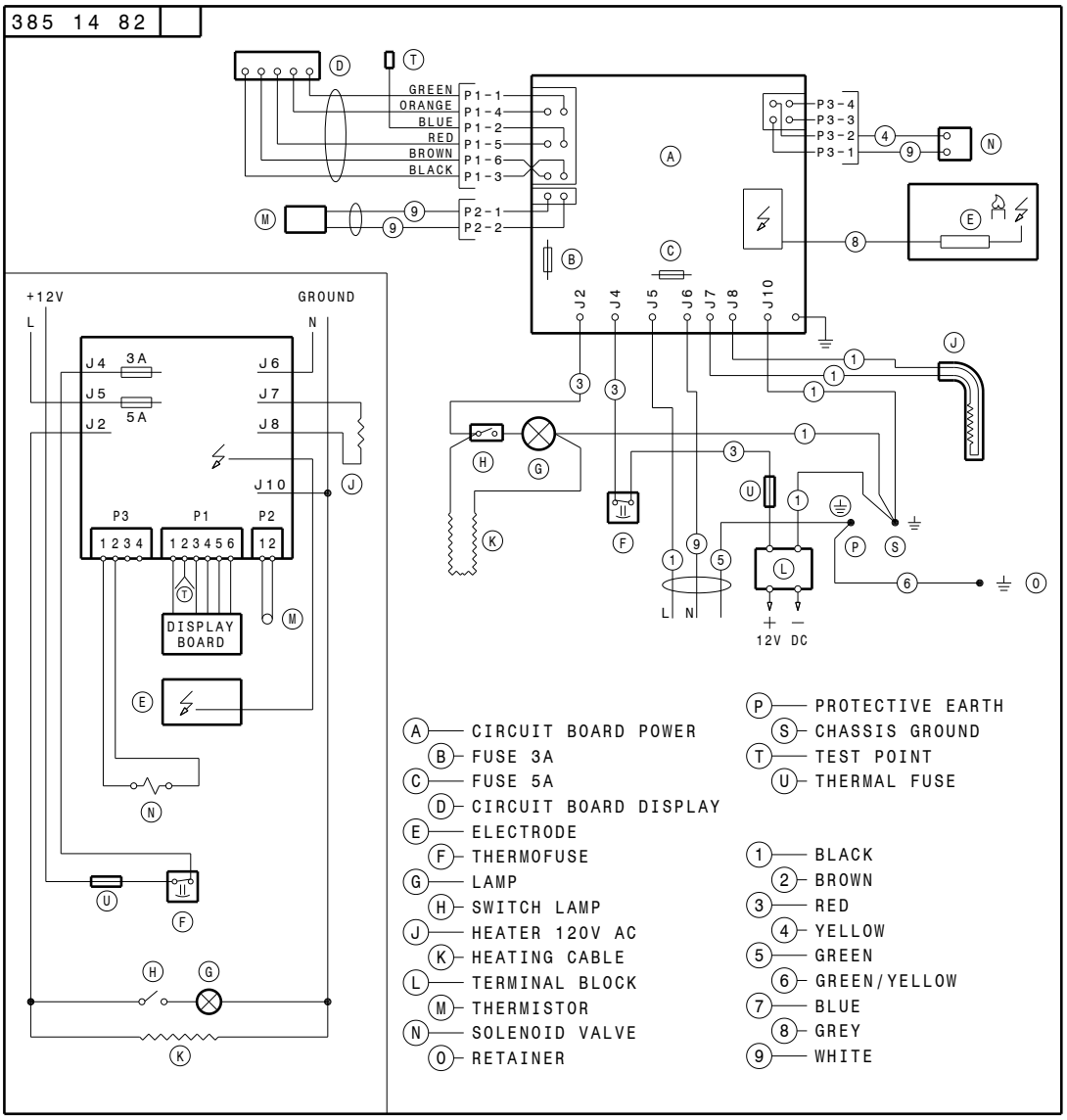
385 14 82
GREEN
ORANGE
BLUE
RED
BROWN
BLACK
P1-1
P1-4
P1-2
P1-5
P1-6
P1-3
P2-1
P2-2
P3-4
P3-3
P3-2
P3-1
J2
J4
J5
J6
J7
J8
J10
L N
12V DC
+12V
GROUND
L
N
J4
3A
J5
5A
J2
J6
J7
J8
J10
P3
P1
P2
1 2 3 4
1 2 3 4 5 6
1 2
DISPLAY BOARD
A CIRCUIT BOARD POWER
B FUSE 3A
C FUSE 5A
D CIRCUIT BOARD DISPLAY
E ELECTRODE
F THERMOFUSE
G LAMP
H SWITCH LAMP
J HEATER 120V AC
K HEATING CABLE
L TERMINAL BLOCK
M THERMISTOR
N SOLENOID VALVE
O RETAINER
P PROTECTIVE EARTH
S CHASSIS GROUND
T TEST POINT
U THERMAL FUSE
1 BLACK
2 BROWN
3 RED
4 YELLOW
5 GREEN
6 GREEN/YELLOW
7 BLUE
8 GREY
9 WHITE

P38514820