Dometic

Dometic
Spare parts list

When ordering parts, always state:
MODEL NO. - PRODUCT NO. - QUANTITY -
PART NO. - DESCRIPTION
For electric details also state:
VOLTAGE - WATTAGE
Add a 0 in front of part numbers with less than 10 digits

Recreational Vehicle Refrigerator

PNC	Voltage	Brand	Model	Door	Market
921148356	120V/ 60Hz AC	Dometic	RM1350		CA - US

SERVICE OFFICE
USA
Dometic, LLC
2320 Industrial Parkway
Elkhart, IN 46516
574-294-2511

CANADA
Dometic, LLC
46 Zatonski, Unit3
Brantford, ON N3T 5L8
CANADA
519-720-9578

For Service Center Assistance, Call:
800-544-4881

Publication-No.
599719652
2009/06/04

© Dometic, LLC

Product specification 92114835600 RM1350

Technical features

Width	32-3/4 (Recess) in
Height	63-3/16 (Recess) in
Depth	26-1/16 (Recess) in

Heating element

Voltage	120 V/ 60Hz AC
Performance	420 W

© Dometic, LLC

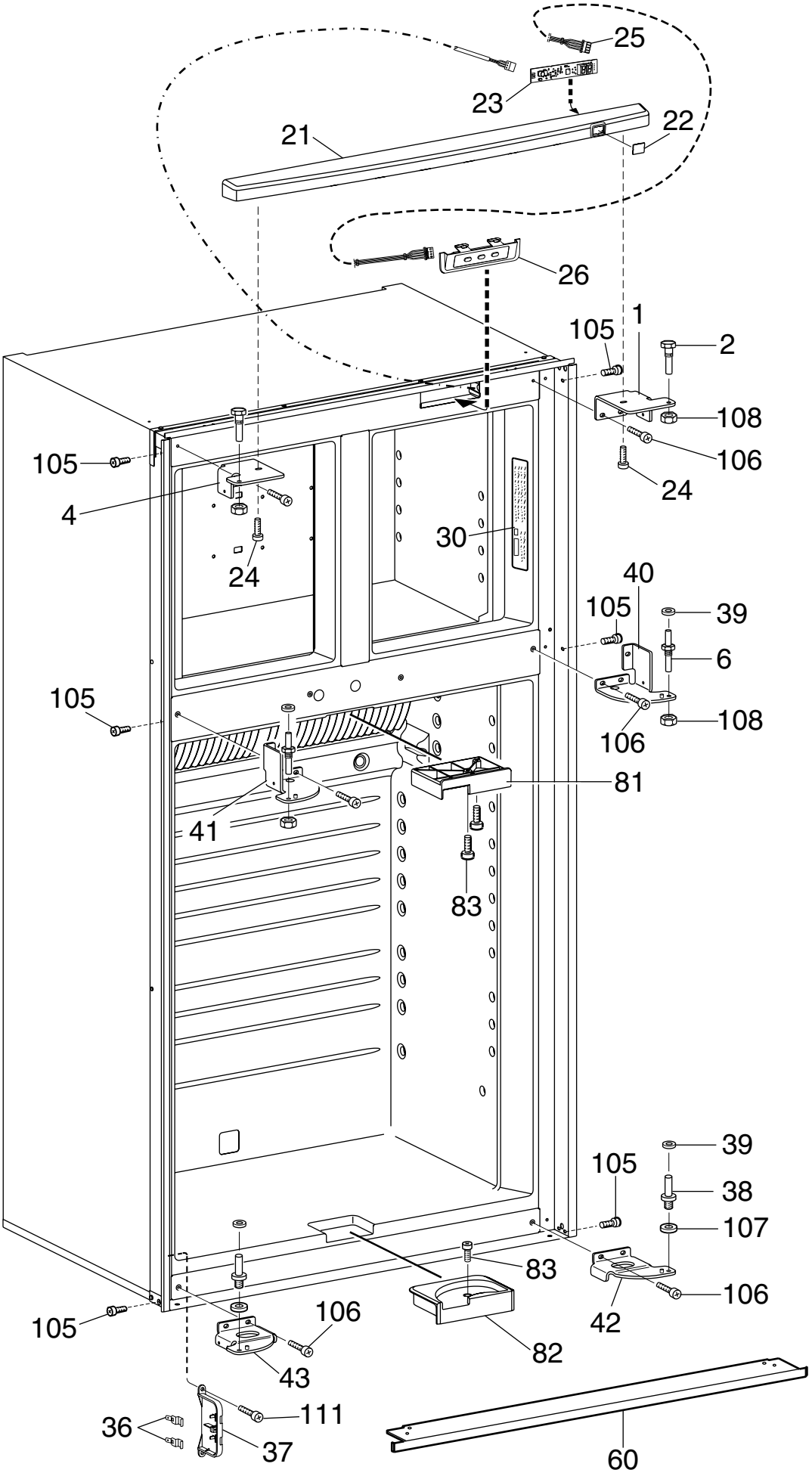

PCMOB3012649

© Dometic, LLC

Exploded view no.: PCMOB3012649
P00003012819

Matrix	PNC	ELC	ProdDate	Model
A	921148356	00	20090617	RM1350

Pos	Part No.	Matrix	Description
1	3850989025	A	Hinge,black
2	2932647015	A	Hinge pin,upper
4	3850989017	A	Hinge,black
6	2932648021	A	Hinge pin,black
21	3851073019	A	Front,black
22	3850970017	A	Lens
23	3851485023	A	Pcb,display
24	3858006012	A	Screw,PT PH4x10
25	2954568016	A	Harness
26	3850964010	A	Control panel,cpl.
30	3851035000	A	Instruction plate
36	3851212013	A	Contact plate
37	3851211015	A	Holder
38	2932649029	A	Hinge pin
39	3858010022	A	Washer,black,5,5X12X1
40	3851230049	A	Hinge,cpl.
41	3851230031	A	Hinge,cpl.
42	3851230023	A	Hinge,cpl.,lower
43	3851230015	A	Hinge,cpl.,lower
60	2932664093	A	Base cover,black
81	3851102016	A	Guiding device,upper
82	3851103014	A	Guiding device,lower
83	3858002300	A	Screw,RXS 4.2X25
105	3858004041	A	Screw,MRX 4x6 FZ
106	3858103017	A	Screw,black,M4X10
107	3858010113	A	Washer,zinc-plated,BRB 6,4X12,5
108	3858009057	A	Nut,black,ML6 M6
111	3858002201	A	Screw,zinc-plated,RXS B8X9,5

© Dometic, LLC

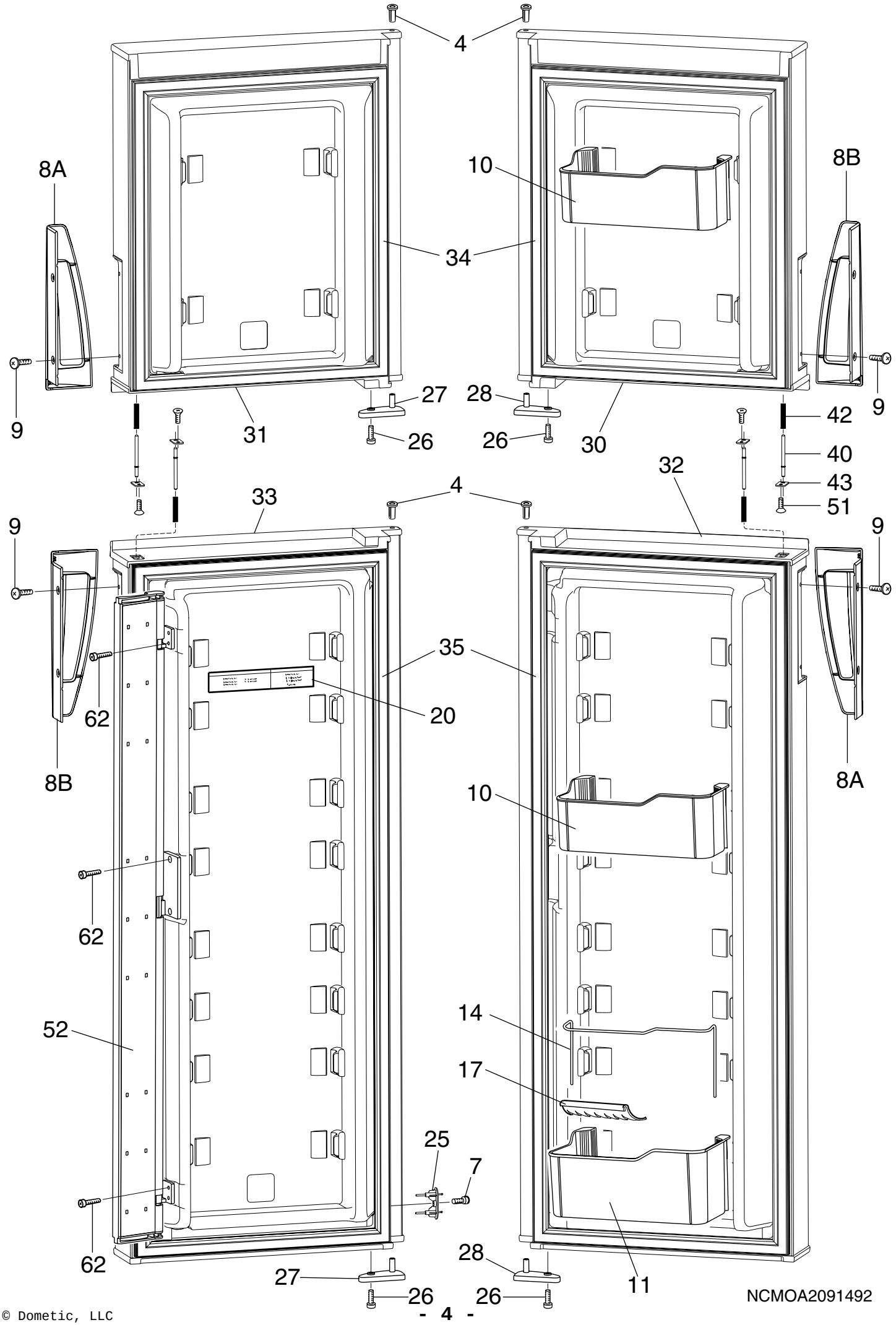
4
4
8A
10
8B
34
9
9
27
28
42
9
31
26
26
30
40
32
43
4
33
51
9
9
35
62
20
8B
8A
10
62
14
52
17
25
7
62
28
27
26
26
11
NCMOA2091492

© Dometic, LLC

Exploded view no.: NCMOA2091492
P00003012820

Matrix	PNC	ELC	ProdDate	Model
A	921148356	00	20090617	RM1350

Pos	Part No.	Matrix	Description
4	2931171066	A	Hinge bushing,black
7	3858002102	A	Screw,zinc-plated,RXS B4X9,5
8A	3851159032	A	Handle
8B	3851159040	A	Handle
9	3858089018	A	Screw,black,EML 5X10
10	3850973011	A	Door shelf,transparent
11	3851052013	A	Door shelf,transparent
14	3850976022	A	Rack
17	2932658046	A	Bottle holder,white,L=130mm, (5-1/8")
20	3851235006	A	Label
25	3851214019	A	Contact pin,cpl.
26	3858006137	A	Screw,PH ETP 3.5X10
27	3851244016	A	Door stop,left
28	3851244024	A	Door stop,right
30	3851169072	A	Freezer door,with,gasket,right
31	3851169080	A	Freezer door,with,gasket,left
32	3851170104	A	Refrigerator door,with,gasket,right
33	3851170112	A	Refrigerator door,with,gasket,left
34	3851228027	A	Door gasket,Freezer
35	3851228019	A	Door gasket,refrigerator
40	3851092019	A	Lock bar
42	3850497011	A	Spring
43	3850496013	A	Plate
51	3858071024	A	Screw,black,ETP 40X14
52	3851104038	A	Flap,cpl.
62	3858002276	A	Screw,zinc-plated,RXS B8, 4,2x16

© Dometic, LLC

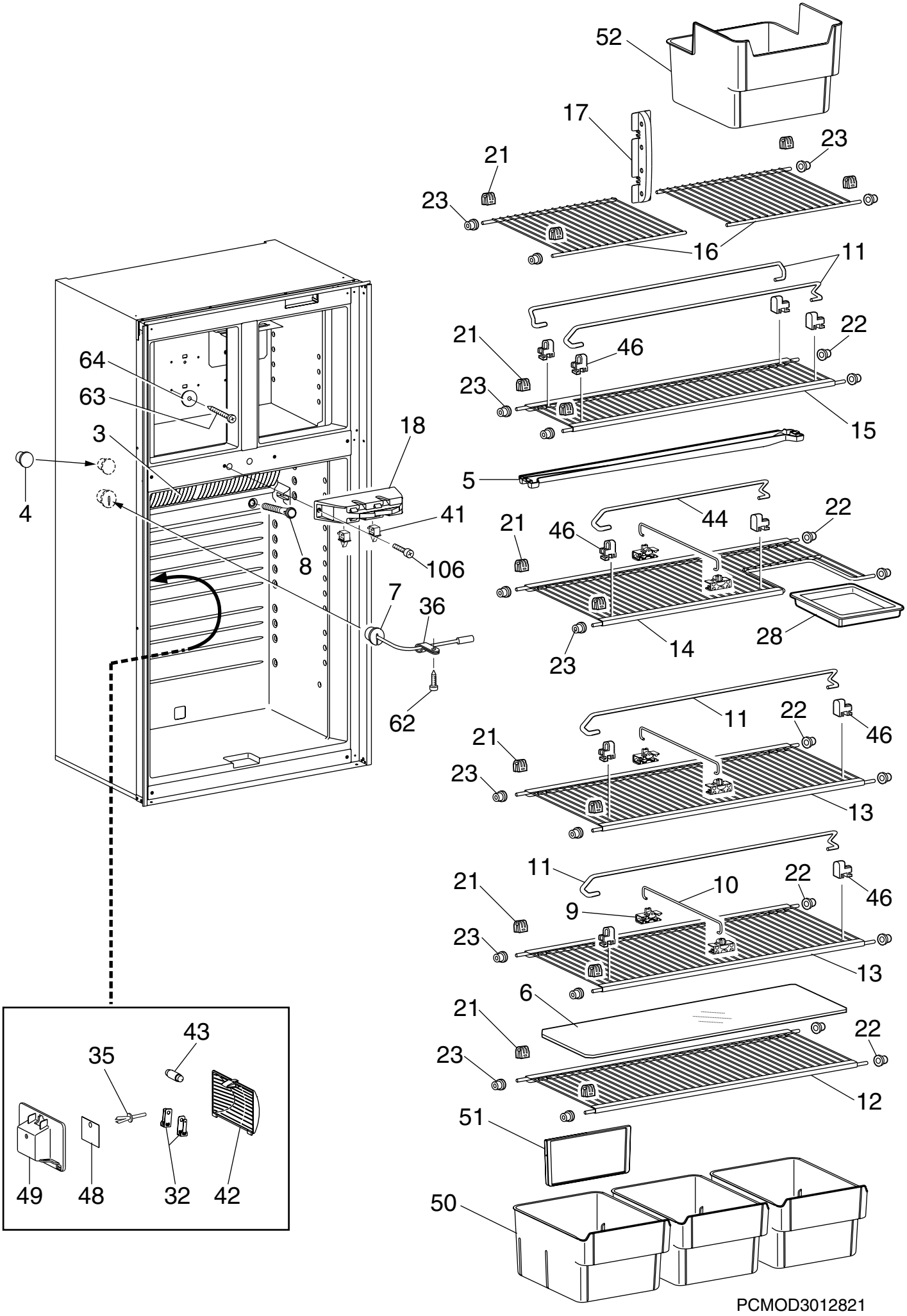
52
17
21
23
23
16
11
21
46
22
23
15
64
63
3
18
5
4
41
44
22
21
46
8
106
7
36
28
14
23
62
11
22
46
21
23
13
11
10
22
46
21
9
23
13
6
21
22
23
12
51
50
49
48
32
42
43
35
PCMOD3012821

© Dometic, LLC

Exploded view no.: PCMOD3012821
P00003012821

Matrix	PNC	ELC	ProdDate	Model
A	921148356	00	20090617	RM1350

Pos	Part No.	Matrix	Description
3	3851166011	A	Cooling flange
4	3851222012	A	Cover
5	3851050017	A	Drop tray,transparent
6	2931117226	A	Shelf,plastic
7	2002301006	A	Cover
8	3851229017	A	Drain,pipe
9	3851208011	A	Holder,sliding type
10	3851209019	A	Rack
11	2007337252	A	Rack
12	3851236012	A	Shelf,wire,cpl.
13	3851236020	A	Shelf,wire,cpl.
14	3851237010	A	Shelf,wire,cpl.
15	3851236038	A	Shelf,wire,cpl.
16	3851023014	A	Shelf,wire
17	3851153019	A	Shelf support,rear
18	3851075014	A	Door,latch,cpl.
21	2932102011	A	Shelf support
22	2932101013	A	Plug
23	2932103019	A	Plug
28	2932636018	A	Box
32	2932108018	A	Contact pin
35	165521030	A	Expansion rivet
36	2932463025	A	Hose clamp,white
41	3851000012	A	Switch
42	3850962014	A	Lamp glass
43	2007290006	A	Lamp,10W,12V
44	2007337179	A	Rack
46	2930693045	A	Holder
48	3850963012	A	Reflector
49	3850961016	A	Lamp housing
50	3851089015	A	Crisper,transparent
51	3851090013	A	Divider
52	3851118012	A	Ice container,transparent
62	3858002268	A	Screw,RXS B8X19
63	3858036027	A	Screw,KFXS 4.8X55
64	3858010147	A	Washer,aluminium,5.2x22x1.5
106	3858103017	A	Screw,black,M4X10

© Dometic, LLC

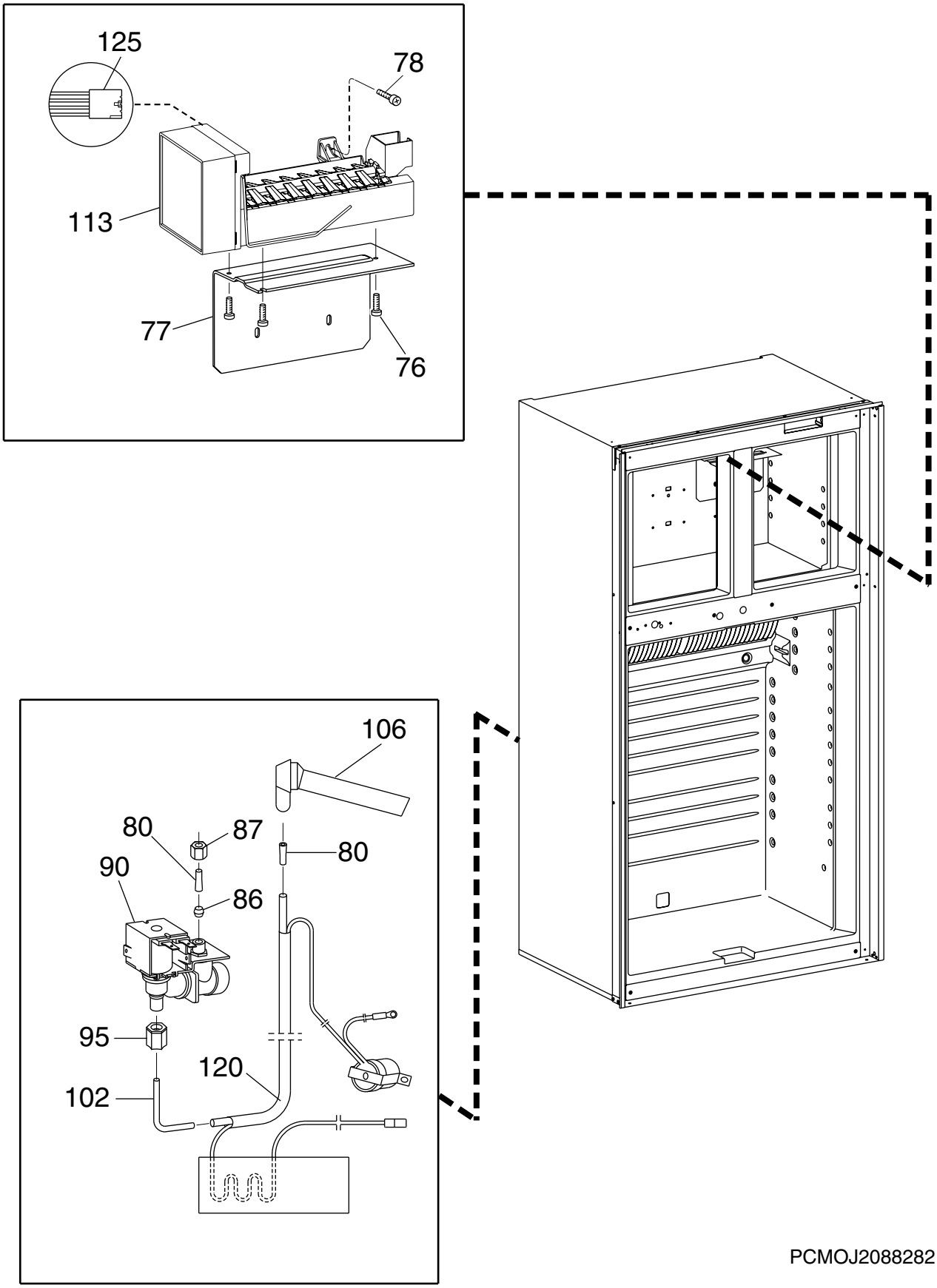

© Dometic, LLC

Exploded view no.: PCMOJ2088282
P00003012822

Matrix	PNC	ELC	ProdDate	Model
A	921148356	00	20090617	RM1350

Pos	Part No.	Matrix	Description
76	3858005048	A	Screw,stainless,RXK 4,2X13 PH2
77	3851142012	A	Shelf,ice-maker
78	3858004181	A	Screw,stainless,MRX M4X16
80	3108708185	A	Insert,Inlet
86	3108706296	A	Ferrule,Inlet
87	3108706288	A	Nut,brass,Inlet
90	3108706270	A	Valve,water
95	2930839010	A	Nut,7/16"
102	3850220017	A	Insert,copper,water inlet valve
106	3851203012	A	Filling tube,ice-maker
113	3108705553	A	Ice-maker
120	3850688031	A	Kit,heater,water inlet valve
125	2954578015	A	Harness,ice-maker

© Dometic, LLC

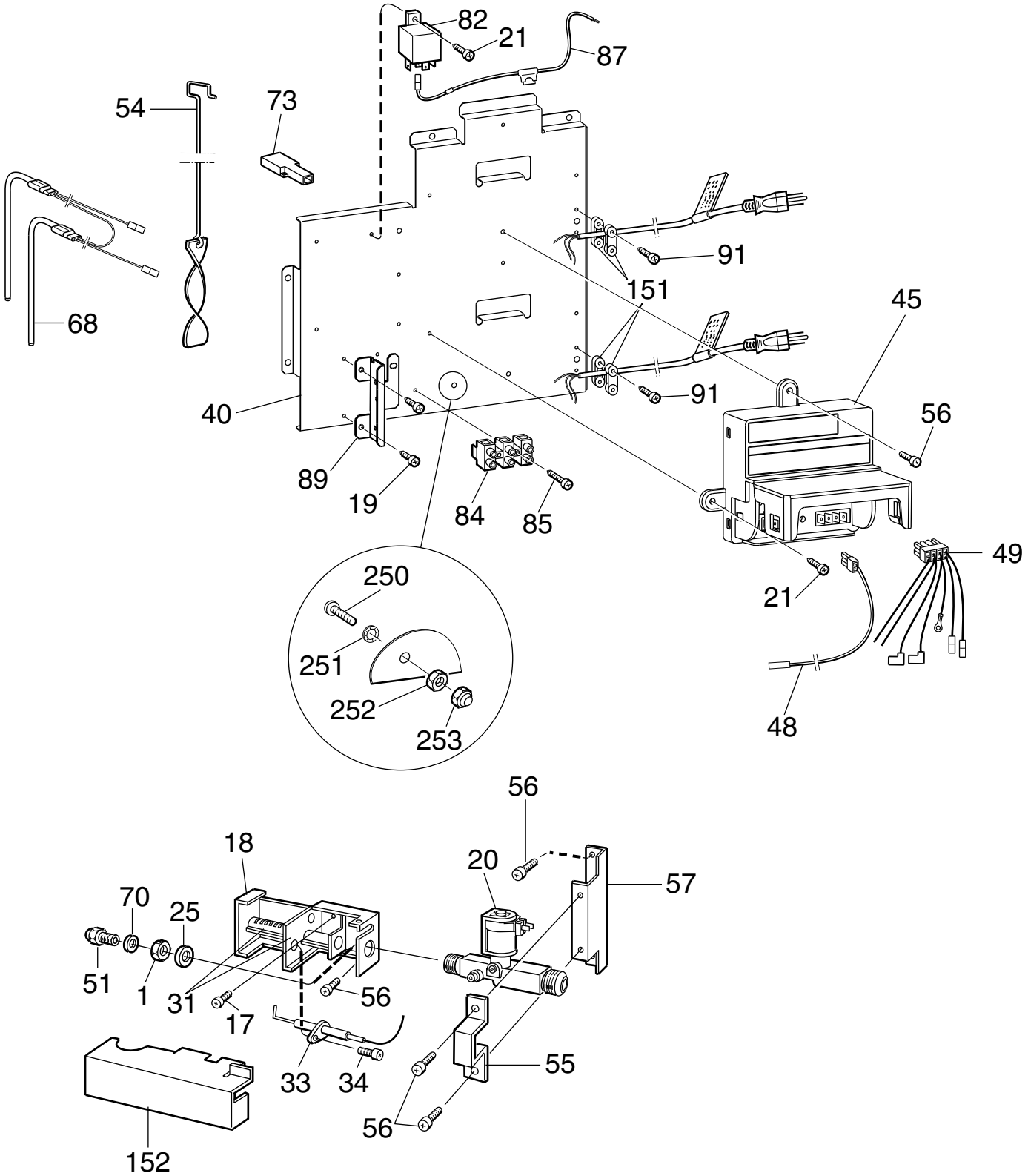

PCMOH3012767

Exploded view no.: PCMOH3012767
P00003012824

Matrix	PNC	ELC	ProdDate	Model
A	921148356	00	20090617	RM1350

Pos	Part No.	Matrix	Description
1	140207044	A	Nut
17	3858039039	A	Screw,zinc-plated,MRX M4X8
18	2932161017	A	Burner housing
19	3858002144	A	Screw,zinc-plated,RXS B6X9,5
20	2932615020	A	Solenoid valve
21	3858002151	A	Screw,zinc-plated,RXS B6X13
25	3858010071	A	Washer,12,5X18,5X1
31	955001672	A	Burner pipe,complete
33	2932781053	A	Electrode
34	3858002052	A	Screw,zinc-plated,RXS B6X6,5
40	3851475016	A	Bracket
45	3851331011	A	Power,module
48	3851059042	A	Conductor,thermistor
49	2954608010	A	Conductor,solenoid valve
51	2007419332	A	Jet,nr 76
54	2932667054	A	Flame spreader
55	2932662014	A	Bracket
56	3858039047	A	Screw,zinc-plated,MRX M4X10
57	2932043017	A	Support plate
68	3850644620	A	Heater,120V, 2x 210W
70	2007457001	A	Washer,0,5mm
73	2931963017	A	Connector,Y
82	3851334007	A	Relay
84	3858022027	A	Terminal block
85	3858002185	A	Screw,zinc-plated,RXS B6X25
87	2954553034	A	Wire,with,fuse
89	3851199012	A	Bracket,water,valve
91	3858002177	A	Screw,zinc-plated,RXS B6X19
151	561014010	A	Cable clamp
152	2931401018	A	Cover
250	3858004033	A	Screw,zinc-plated,MRX M4X16
251	3858011012	A	Lock washer,zinc-plated,4,3X8
252	3858009016	A	Hexagon nut,zinc-plated,M4X3,2
253	3858028024	A	Lock nut,zinc-plated,M4

© Dometic, LLC

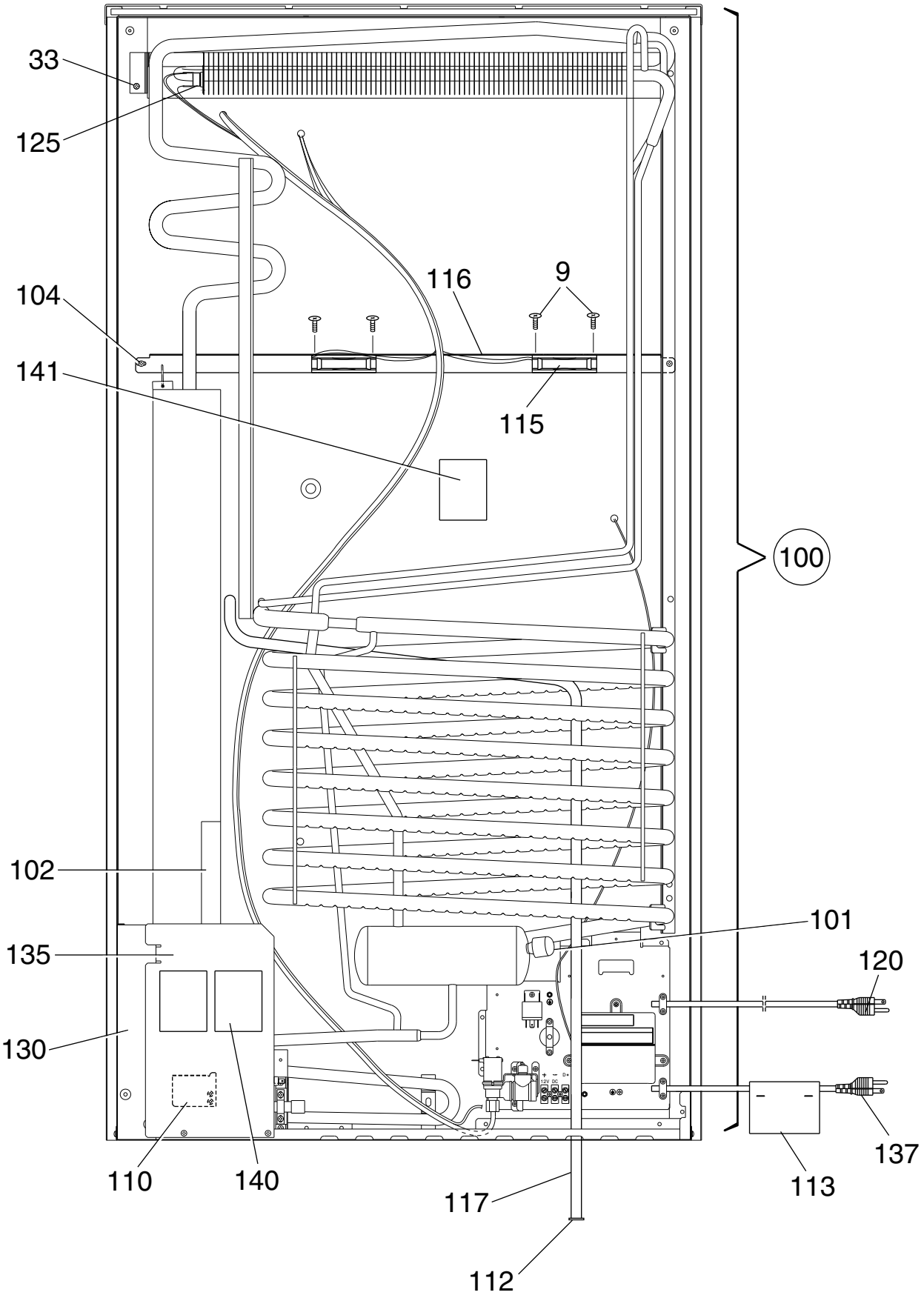

PCMOE3012794

© Dometic, LLC

Exploded view no.: PCMOE3012794
P00003012825

Matrix	PNC	ELC	ProdDate	Model
A	921148356	00	20090617	RM1350

Pos	Part No.	Matrix	Description
9	3858089018	A	Screw,black,EML 5X10
33	3858039096	A	Screw,zinc-plated,MRX M5X14
100	2934949104	A	Cooling unit,with,thermal fuse,949
101	173228008	A	Cap
102	2933557023	A	Flap
104	3858068012	A	Screw,DK 4.8X19
110	3850600010	A	Protection,blow-out
112	2932115013	A	Discharge pipe,plug
113	2932733005	A	Label
115	3851183016	A	Fan
116	3851390025	A	Bracket,fan
117	2932749100	A	Drainage hose,L1850
120	2002699177	A	Cord set
125	3850306063	A	Thermal fuse
130	3851204010	A	Base plate,rear
135	2932155019	A	Support plate
137	2002699219	A	Cord set
140	3850582002	A	Label
141	3850583000	A	Label
999	8251292028	A	User manual
			not shown

© Dometic, LLC

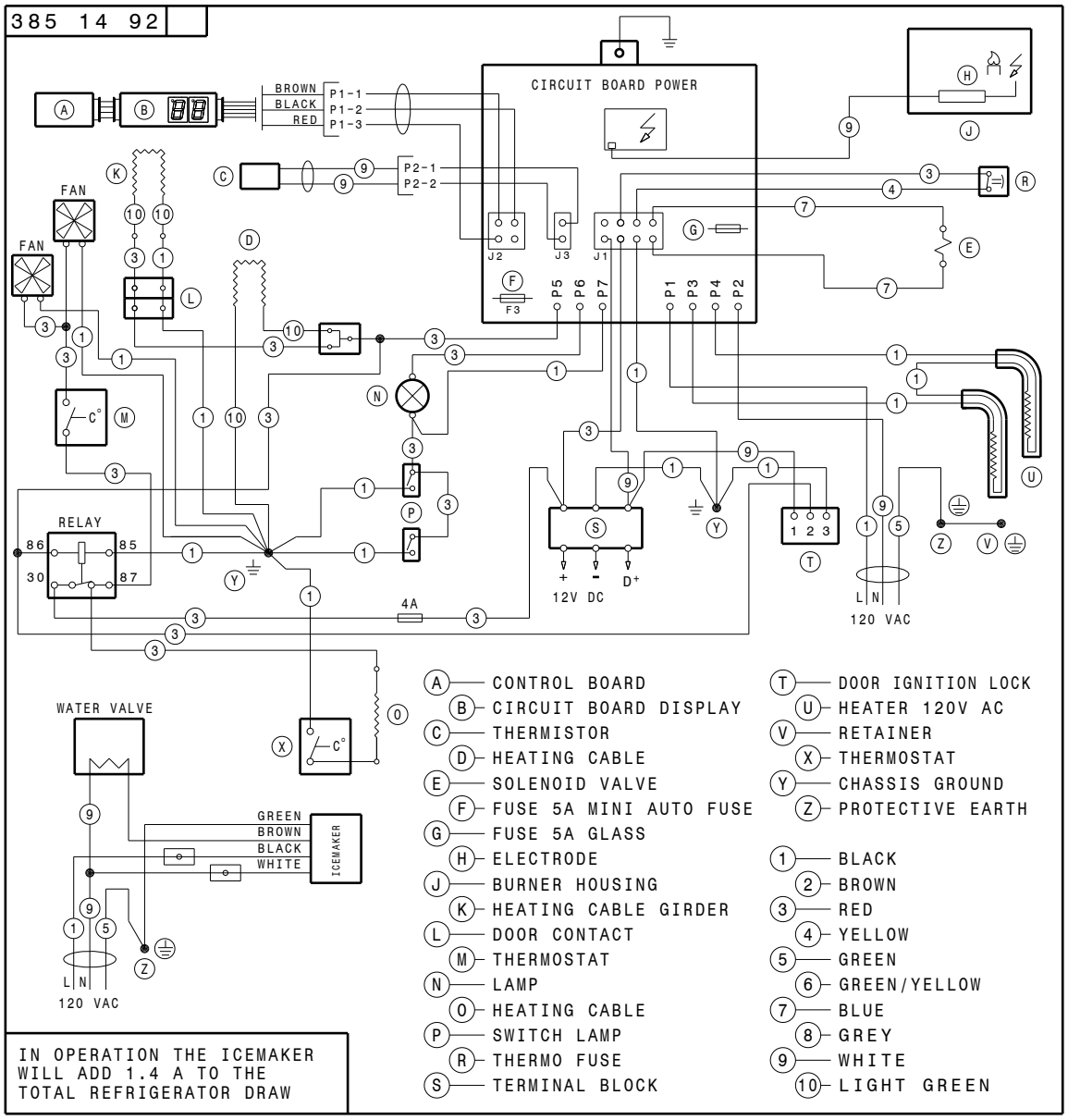
385 14 92
CIRCUIT BOARD POWER
BROWN
BLACK
RED
P1-1
P1-2
P1-3
P2-1
P2-2
J1
J2
J3
F3
P5
P6
P7
P1
P3
P4
P2
FAN
FAN
RELAY
86
85
30
87
4A
12V DC
D+
1 2 3
L N
120 VAC
WATER VALVE
GREEN
BROWN
BLACK
WHITE
ICEMAKER
L N
120 VAC
IN OPERATION THE ICEMAKER
WILL ADD 1.4 A TO THE
TOTAL REFRIGERATOR DRAW
A CONTROL BOARD
B CIRCUIT BOARD DISPLAY
C THERMISTOR
D HEATING CABLE
E SOLENOID VALVE
F FUSE 5A MINI AUTO FUSE
G FUSE 5A GLASS
H ELECTRODE
J BURNER HOUSING
K HEATING CABLE GIRDER
L DOOR CONTACT
M THERMOSTAT
N LAMP
O HEATING CABLE
P SWITCH LAMP
R THERMO FUSE
S TERMINAL BLOCK
T DOOR IGNITION LOCK
U HEATER 120V AC
V RETAINER
X THERMOSTAT
Y CHASSIS GROUND
Z PROTECTIVE EARTH
1 BLACK
2 BROWN
3 RED
4 YELLOW
5 GREEN
6 GREEN/YELLOW
7 BLUE
8 GREY
9 WHITE
10 LIGHT GREEN

P38514920