Dometic

Dometic
Spare parts list

When ordering parts, always state:

MODEL NO-Product NO.-QUANTITY-Part No.-Description

For electric details also state:

VOLTAGE - WATTAGE

Add a 0 in front of part numbers with less than 10 digits

Caravan refrigerators

PNC	Voltage	Brand	Model	Door	Market
921144325	120V/Hz AC	Dometic	DM2662	Left	CA - US
921144326	120V/Hz AC	Dometic	DM2662	Right	CA - US

SERVICE OFFICE
USA
Dometic, LLC
2320 Industrial Parkway
Elkhart, IN 46516
574-294-2511

CANADA
Dometic, LLC
46 Zatonski, Unit3
Brantford, ON N3T 5L8
CANADA
519-720-9578

For Service Center Assistance, Call:
800-544-4881

Publication-No.
599718762
2009/04/24

© Dometic

Product specification 92114432500 DM2662

Technical features

Width	23-11/16 (Recess) in
Height	53-3/4 (Recess) in
Depth	24 (Recess) in

Heating element

Voltage	120 V/Hz AC
Performance	325 W

Door stopper

Left

© Dometic

Product specification 92114432600 DM2662

Technical features

Width	23-11/16 (Recess) in
Height	53-3/4 (Recess) in
Depth	24 (Recess) in

Heating element

Voltage	120 V/Hz AC
Performance	325 W

Door stopper

Right

© Dometic

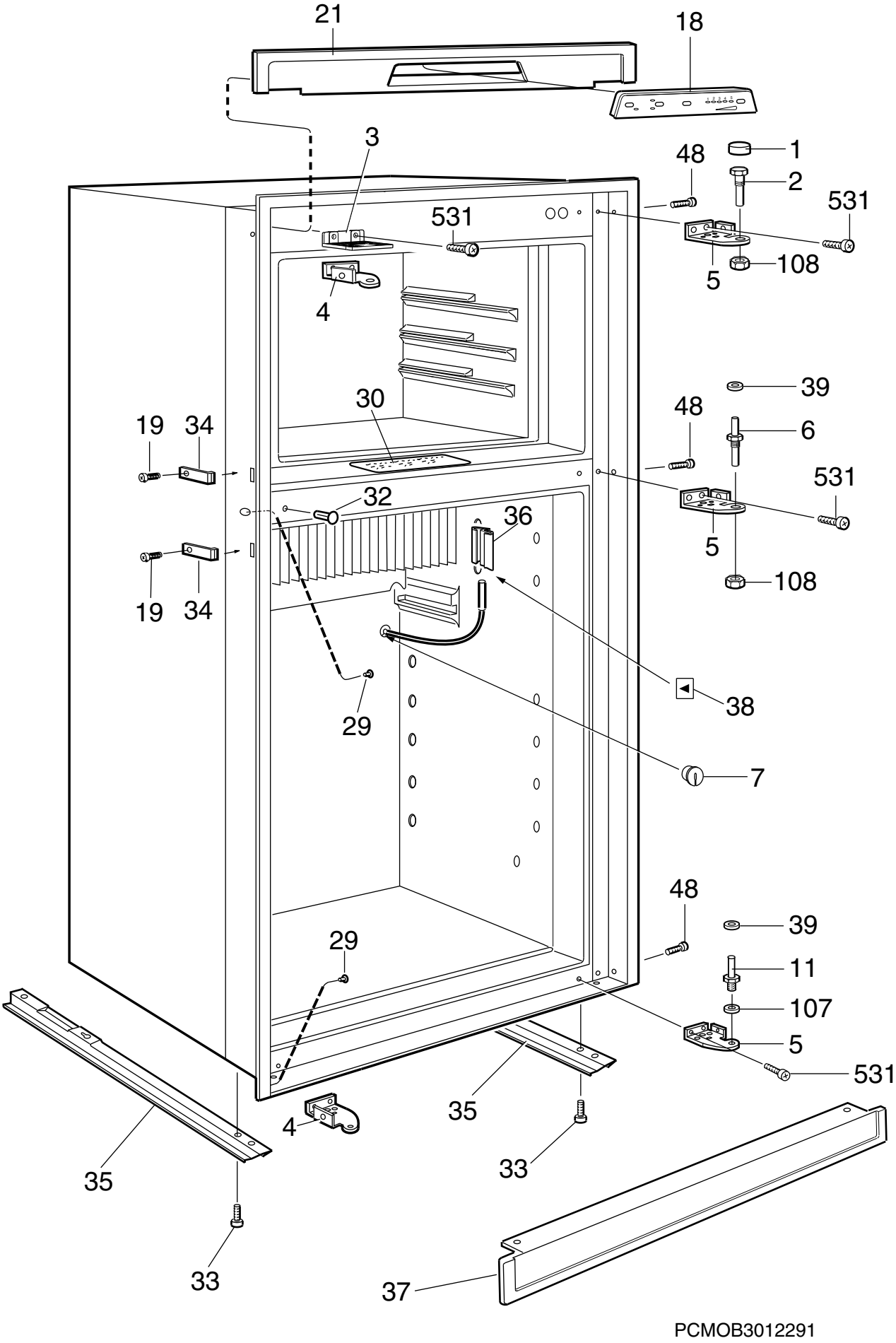
21
18
3
48
1
2
531
531
108
5
4
39
30
48
6
19
34
531
32
36
5
19
34
108
38
29
7
48
39
29
11
107
5
531
35
4
33
35
33
37
PCMOB3012291

Exploded view no.: PCMOB3012291
P00003012291

Matrix	PNC	ELC	ProdDate	Model
A	921144325	00	20090423	DM2662
B	921144326	00	20090422	DM2662

Pos	Part No.	Matrix	Description
1	2932736081	A B	Cover,black
2	2932647015	A B	Hinge pin,upper
3	3851466015	A B	Bracket,black
4	2932643048	A -	Hinge,black
5	2932643030	A B	Hinge,black
6	2932648021	A B	Hinge pin,black
7	2002301006	A B	Cover
11	2932649011	A B	Hinge pin,lower
18	2932884055	A B	Panel,display board,black
19	3858002052	A B	Screw,zinc-plated,RXS B6X6,5
21	2932641075	A B	Front,black
29	2930740077	A B	Cover,black
30	2932435007	A B	Instruction plate
32	3850585039	A B	Plug,black
33	3858039096	A B	Screw,zinc-plated,MRX M5X14
34	2932855014	A B	Fastening bow
35	2932660018	A B	Rail
36	3851088017	A B	Bracket,thermistor
37	2932690049	A B	Base cover,black
38	2933180016	A B	Label
39	3858010022	A B	Washer,black,5,5X12X1
48	3858004058	A B	Screw,zinc-plated,MRX M4X4
107	3858010113	A B	Washer,zinc-plated,BRB 6,4X12,5
108	3858009057	A B	Nut,black,ML6 M6
531	3858039047	A B	Screw,zinc-plated,MRX M4X10
999	2932750124	A -	Door reversing kit,left-right,black not shown
999	2932750116	- B	Door reversing kit,right-left,black not shown

© Dometic

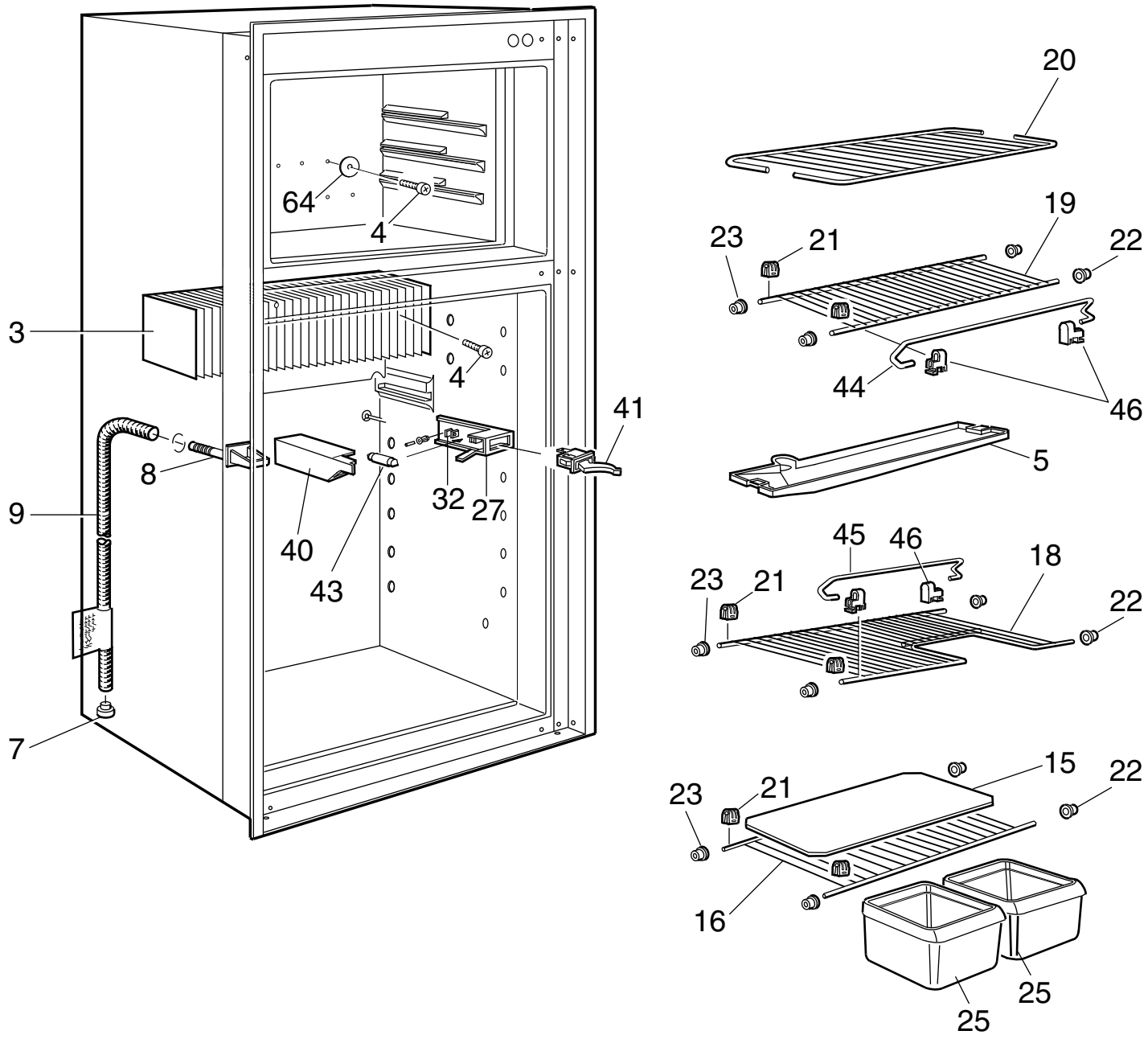

PCMOD3012292

Exploded view no.: PCMOD3012292
P00003012292

Matrix	PNC	ELC	ProdDate	Model
A	921144325	00	20090423	DM2662
B	921144326	00	20090422	DM2662

Pos	Part No.	Matrix	Description
3	2932630011	A B	Cooling flange
4	3858036019	A B	Screw,zinc-plated,KFXS B10X38
5	2932624014	A B	Evaporation tray
7	2932115013	A B	Discharge pipe,plug
8	2932635010	A B	Drain
9	2932749019	A B	Drain hose,L=1375mm
15	2931117176	A B	Shelf,plastic,transparent
16	3850324025	A B	Grating shelf
18	3850325014	A B	Grating shelf
19	3850324033	A B	Grating shelf
20	2932627025	A B	Grating shelf,white
21	2932102011	A B	Shelf support
22	2932101013	A B	Plug
23	2932103019	A B	Plug
25	2932621077	A B	Crisper,transparent
27	2932523018	A B	Lampholder
32	2932108018	A B	Contact pin
40	2932106012	A B	Lamp cover
41	2932665017	A B	Switch
43	2007290006	A B	Lamp,10W,12V
44	2007337211	A B	Rack
45	2007337120	A B	Rack
46	2930693045	A B	Holder
64	3858010147	A B	Washer,aluminium,5.2x22x1.5

© Dometic

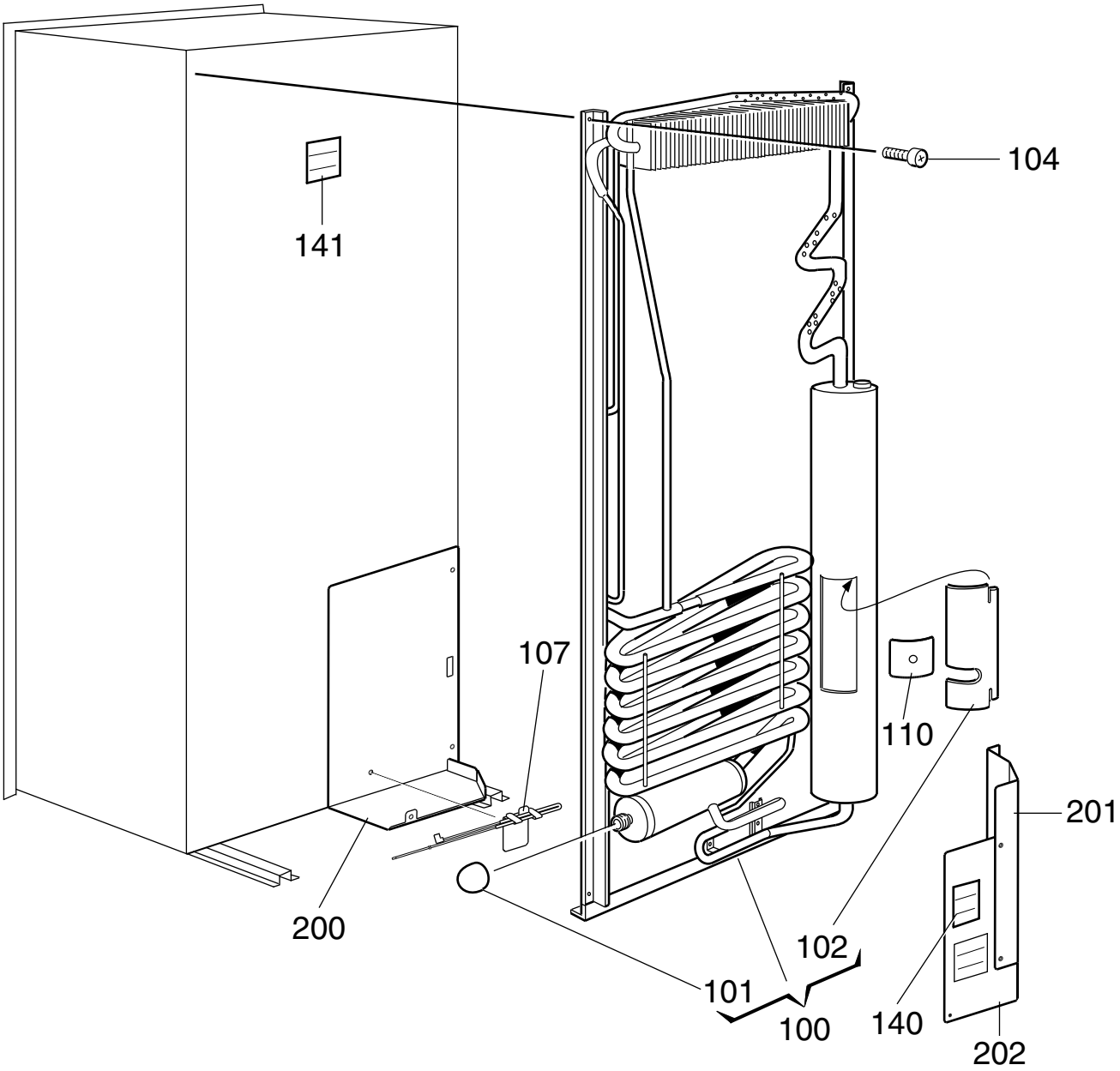

NCMOE2099520

Exploded view no.: NCMOE2099520
P00003012293

Matrix	PNC	ELC	ProdDate	Model
A	921144325	00	20090423	DM2662
B	921144326	00	20090422	DM2662

Pos	Part No.	Matrix	Description
100	2934606100	A B	Cooling unit,with,thermal fuse,606
101	173228008	A B	Cap
102	2933557007	A B	Cover sheet
104	3858068012	A B	Screw,DK 4.8X19
107	3851409015	A B	Thermal fuse,cpl.
110	3851397012	A B	Cover,for,heater
140	3850582002	A B	Label
141	3850583000	A B	Label
200	3851300016	A B	Cover plate
201	3851301014	A B	Cover plate,side
202	3851302012	A B	Cover plate,back
999	8251293034	A B	User manual
			not shown

© Dometic

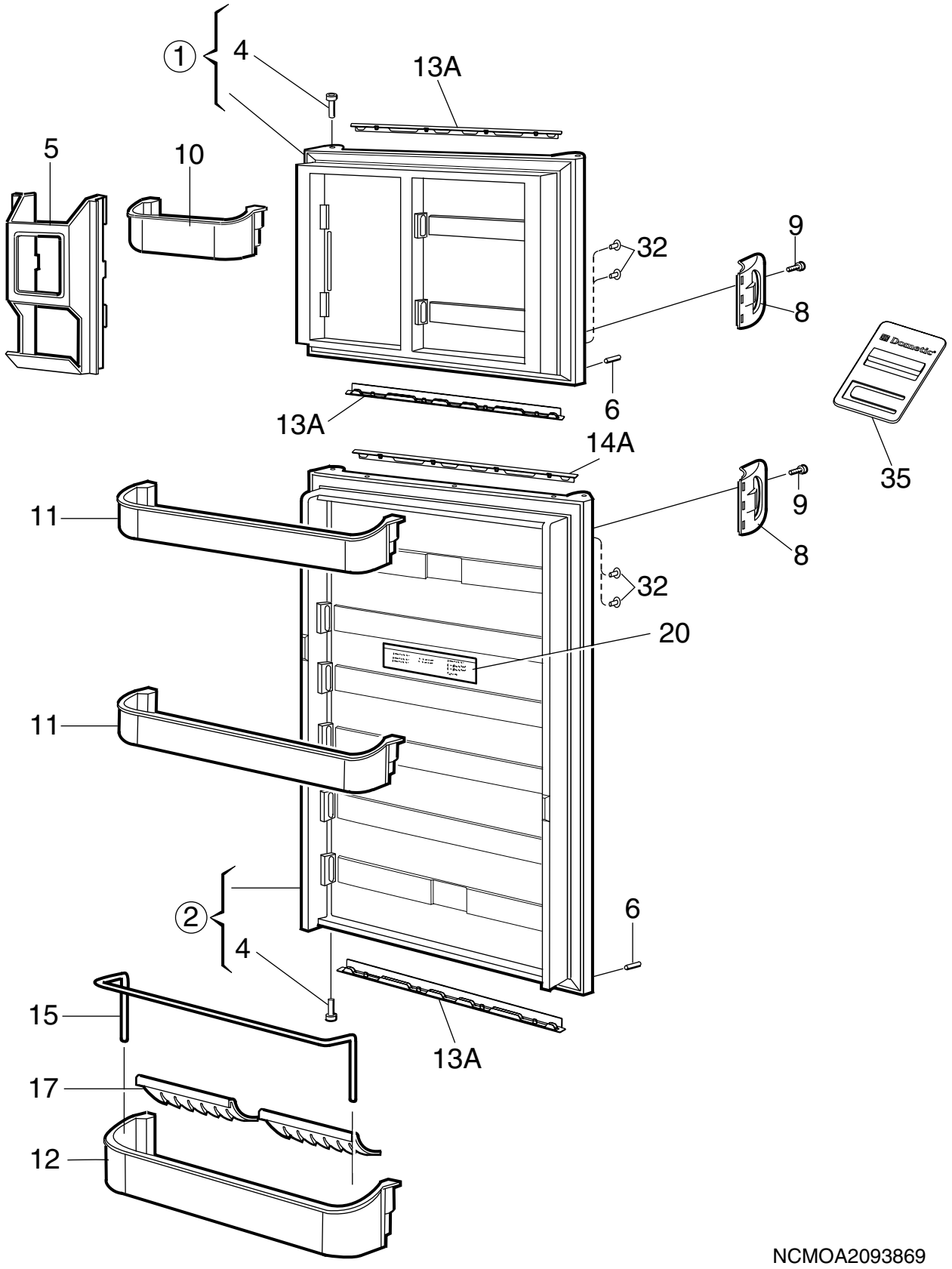
1
4
13A
5
10
9
32
8
6
13A
14A
35
11
9
8
32
20
11
2
6
4
15
13A
17
12
NCMOA2093869

Exploded view no.: NCMOA2093869
P00003012294

Matrix	PNC	ELC	ProdDate	Model
A	921144325	00	20090423	DM2662
B	921144326	00	20090422	DM2662

Pos	Part No.	Matrix	Description
1	2932561208	A -	Freezer door,left,black
1	2932561190	- B	Freezer door,right,black
2	2932563063	A -	Refrigerator door,left,black
2	2932563055	- B	Refrigerator door,right,black
4	2931171066	A B	Hinge bushing,black
5	2932578038	A B	Juice container,transparent
6	2932588011	A B	Stopper
8	3851174023	A B	Handle,black
9	3858000049	A B	Screw,black,PT 50X26
10	2932577048	A B	Door shelf,transparent
11	2932576065	A B	Door shelf,transparent
12	2932575059	A B	Door shelf,transparent
13A	3850919022	A B	Decoration strip,black
14A	3850919063	A B	Decoration strip,black
15	2932585033	A B	Rack
17	2932658012	A B	Bottle holder,white
20	3851235006	A B	Label
32	3850625025	A B	Cover,black
35	3850781018	A B	Spacer,door

© Dometic

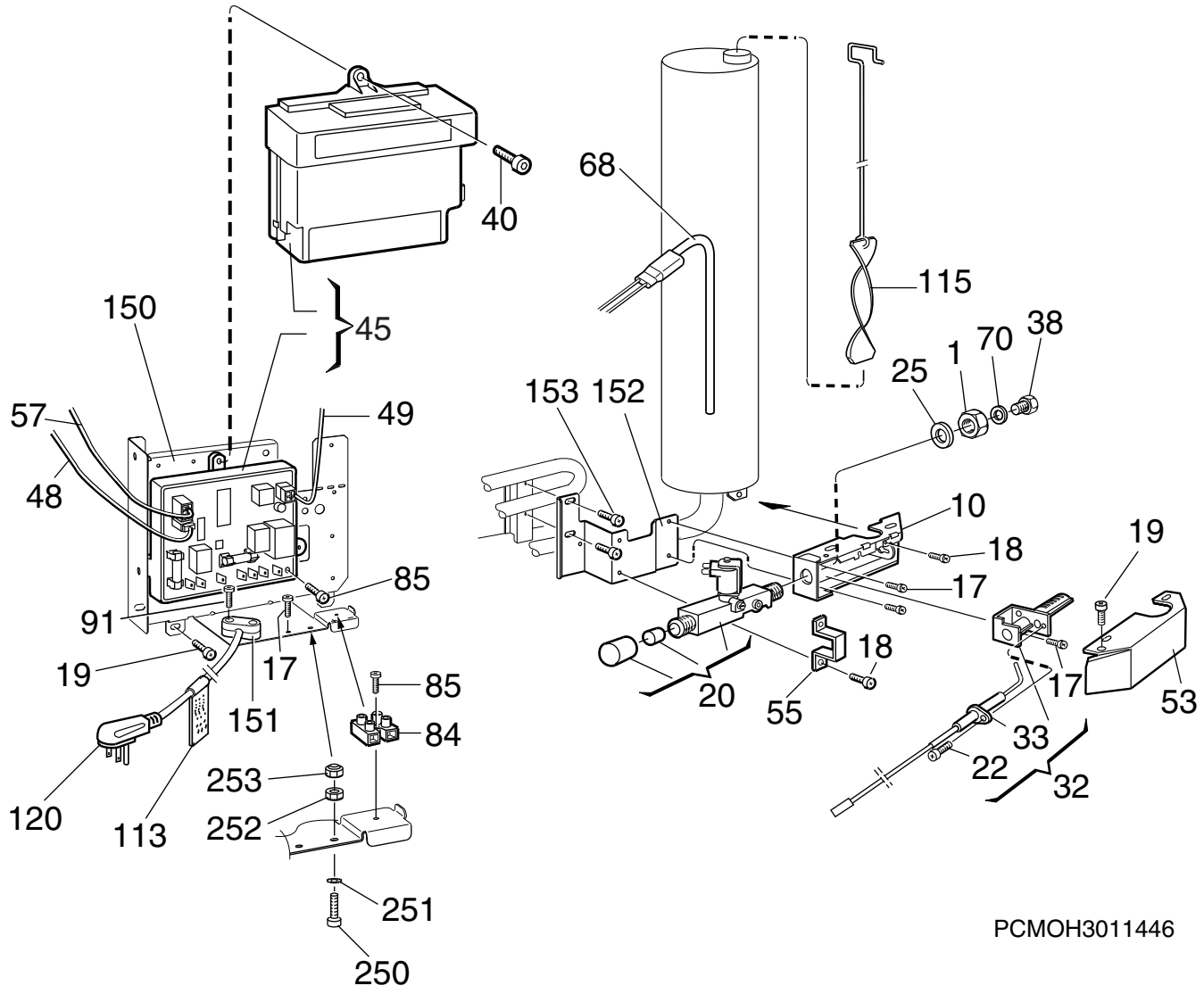

68
40
115
150
45
38
70
1
25
57
49
153
152
48
10
19
18
85
17
91
18
19
17
85
20
17
53
151
55
84
33
253
22
32
120
113
252
251
250
PCMOH3011446

Exploded view no.: PCMOH3011446
P00003012295

Matrix	PNC	ELC	ProdDate	Model
A	921144325	00	20090423	DM2662
B	921144326	00	20090422	DM2662

Pos	Part No.	Matrix	Description
1	140207044	A B	Nut
10	2932603018	A B	Burner housing
17	3858039039	A B	Screw,zinc-plated,MRX M4X8
18	3858039047	A B	Screw,zinc-plated,MRX M4X10
19	3858002144	A B	Screw,zinc-plated,RXS B6X9,5
20	2932615012	A B	Solenoid valve
22	3858005014	A B	Screw,zinc-plated,RXK B6X9,5
25	3858010071	A B	Washer,12,5X18,5X1
32	2930697079	A B	Burner,with,conductor
33	2932781012	A B	Electrode,with,conductor
38	2007419217	A B	Jet,complete,no. 58
40	3858039054	A B	Screw,MRX-TT/SW M4x12
45	3850712013	A B	Power,module,integrated
48	3851059034	A B	Conductor,thermistor
49	2954539041	A B	Conductor,solenoid valve
53	2932661016	A B	Cover
55	2932662014	A B	Bracket
57	2954542037	A B	Conductor,PCB
68	3850644422	A B	Heater,325W, 120V
70	2007457001	A B	Washer,0,5mm
84	3858022019	A B	Terminal block
85	3858002185	A B	Screw,zinc-plated,RXS B6X25
91	3858002177	A B	Screw,zinc-plated,RXS B6X19
113	2932733005	A B	Label
115	2932667039	A B	Flame spreader
120	2002699094	A B	Cord set
150	3851474019	A B	Bracket
151	561014010	A B	Cable clamp
152	3850377015	A B	Retainer,solenoid valve
153	3858018017	A B	Screw,zinc-plated,M5X25
250	3858004033	A B	Screw,zinc-plated,MRX M4X16
251	3858011012	A B	Lock washer,zinc-plated,4,3X8
252	3858009016	A B	Hexagon nut,zinc-plated,M4X3,2
253	3858028024	A B	Lock nut,zinc-plated,M4

© Dometic

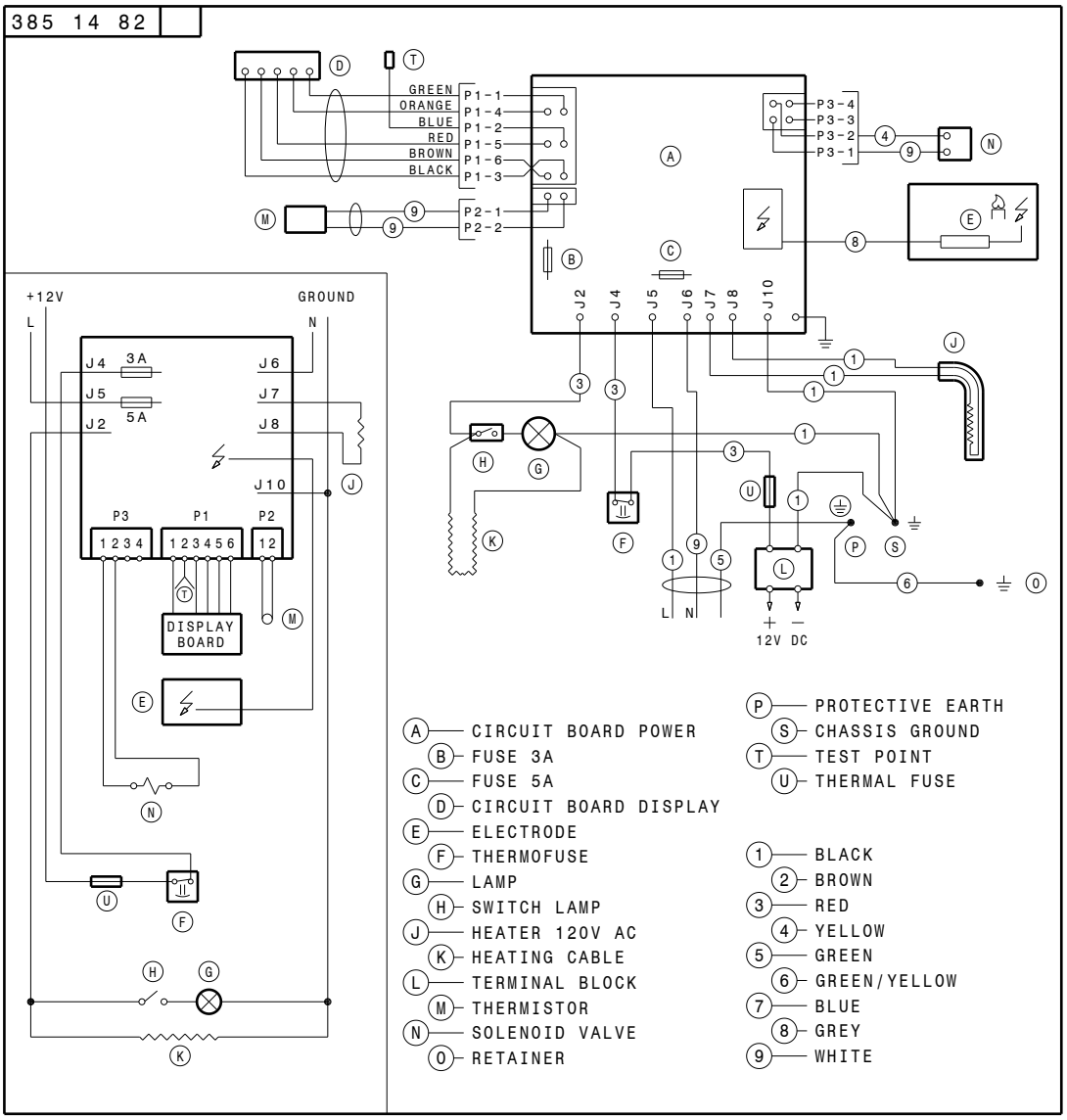
385 14 82
GREEN
ORANGE
BLUE
RED
BROWN
BLACK
P1-1
P1-4
P1-2
P1-5
P1-6
P1-3
P2-1
P2-2
P3-4
P3-3
P3-2
P3-1
J2
J4
J5
J6
J7
J8
J10
L N
12V DC
+12V
GROUND
L
N
3A
5A
P3
P1
P2
1 2 3 4
1 2 3 4 5 6
1 2
DISPLAY BOARD
A CIRCUIT BOARD POWER
B FUSE 3A
C FUSE 5A
D CIRCUIT BOARD DISPLAY
E ELECTRODE
F THERMOFUSE
G LAMP
H SWITCH LAMP
J HEATER 120V AC
K HEATING CABLE
L TERMINAL BLOCK
M THERMISTOR
N SOLENOID VALVE
O RETAINER
P PROTECTIVE EARTH
S CHASSIS GROUND
T TEST POINT
U THERMAL FUSE
1 BLACK
2 BROWN
3 RED
4 YELLOW
5 GREEN
6 GREEN/YELLOW
7 BLUE
8 GREY
9 WHITE

P38514820