Dometic

**Dometic**
**Spare parts list**

When ordering parts, always state:
MODEL NO. - PRODUCT NO. - QUANTITY -
PART NO. – DESCRIPTION
For electric details also state:
VOLTAGE – WATTAGE
Add a 0 in front of part numbers with less than 10 digits

# Recreational Vehicle Refrigerator

| PNC | Voltage | Brand | Model | Door | Market |
|---|---|---|---|---|---|
| 921146239 | 120V/ 60Hz AC | Dometic | RM3962 | Left | CA - US |
| 921146240 | 120V/ 60Hz AC | Dometic | RM3962 | Right | CA - US |



**SERVICE OFFICE**
**USA**
Dometic, LLC
2320 Industrial Parkway
Elkhart, IN 46516
574-294-2511

**CANADA**
Dometic, LLC
46 Zatonski, Unit3
Brantford, ON N3T 5L8
CANADA
519-720-9578

**For Service Center Assistance, Call:**
800-544-4881

Publication-No.
599714023
2009/03/17

© Dometic, LLC

# Product specification 92114623900 RM3962

**Technical features**

| | |
|---|---|
| Width | 23-11/16 (Recess) in |
| Height | 62-61/64 (Recess) in |
| Depth | 24 (Recess) in |

**Heating element**

| | |
|---|---|
| Voltage | 120 V/ 60Hz AC |
| Performance | 325 W |

**Door stopper**

Left

© Dometic, LLC

## Product specification 92114624000 RM3962

**Technical features**

| | |
|---|---|
| Width | 23-11/16 (Recess) in |
| Height | 62-61/64 (Recess) in |
| Depth | 24 (Recess) in |

**Heating element**

| | |
|---|---|
| Voltage | 120 V/ 60Hz AC |
| Performance | 325 W |

**Door stopper**

Right

© Dometic, LLC

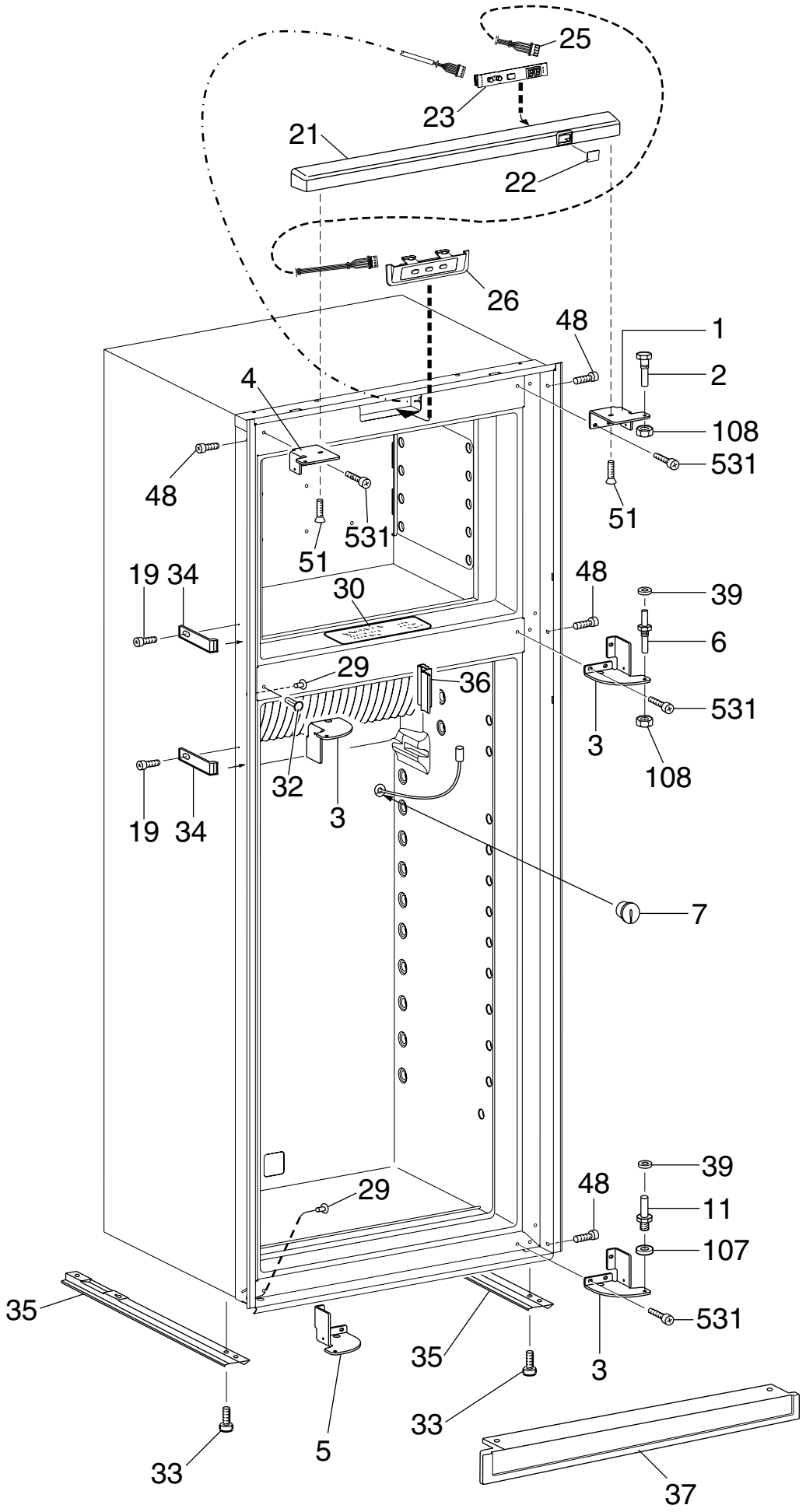


NCMOB2000194

Exploded view no.: NCMOB2000194
P00003010080

| Matrix | PNC | ELC | ProdDate | Model |
|---|---|---|---|---|
| A | 921146239 | 00 | 20081119 | RM3962 |
| B | 921146240 | 00 | 20081119 | RM3962 |

| Pos | Part No. | Matrix | Description |
|---|---|---|---|
| 1 | 3850989025 | A B | Hinge,black |
| 2 | 2932647015 | A B | Hinge pin,upper |
| 3 | 3851187025 | A B | Hinge,black |
| 4 | 3850989017 | A B | Hinge,black |
| 5 | 3851187017 | A - | Hinge,black |
| 6 | 2932648021 | A B | Hinge pin,black |
| 7 | 2002301006 | A B | Cover |
| 11 | 2932649011 | A B | Hinge pin,lower |
| 19 | 3858002052 | A B | Screw,zinc-plated,RXS B6X6,5 |
| 21 | 3850967013 | A B | Cover,front,black |
| 22 | 3850970017 | A B | Lens |
| 23 | 3850969019 | A B | Pcb |
| 25 | 2954568016 | A B | Harness |
| 26 | 3850964010 | A B | Control panel,cpl. |
| 29 | 2930740077 | A B | Cover,black |
| 30 | 3851035000 | A B | Instruction plate |
| 32 | 3850585039 | A B | Plug,black |
| 33 | 3858039096 | A B | Screw,zinc-plated,MRX M5X14 |
| 34 | 2932855014 | A B | Fastening bow |
| 35 | 2932660018 | A B | Rail |
| 36 | 3851088017 | A B | Bracket,thermistor |
| 37 | 2932690049 | A B | Base cover,black |
| 39 | 3858010022 | A B | Washer,black,5,5X12X1 |
| 48 | 3858004058 | A B | Screw,zinc-plated,MRX M4X4 |
| 51 | 3858071024 | A B | Screw,black,ETP 40X14 |
| 107 | 3858010113 | A B | Washer,zinc-plated,BRB 6,4X12,5 |
| 108 | 3858009057 | A B | Nut,black,ML6 M6 |
| 531 | 3858039047 | A B | Screw,zinc-plated,MRX M4X10 |
| 999 | 3851044028 | A - | Door reversing kit,left-right,black |
| | | | not shown |
| 999 | 3851044010 | - B | Door reversing kit,right-left,black |

© Dometic, LLC

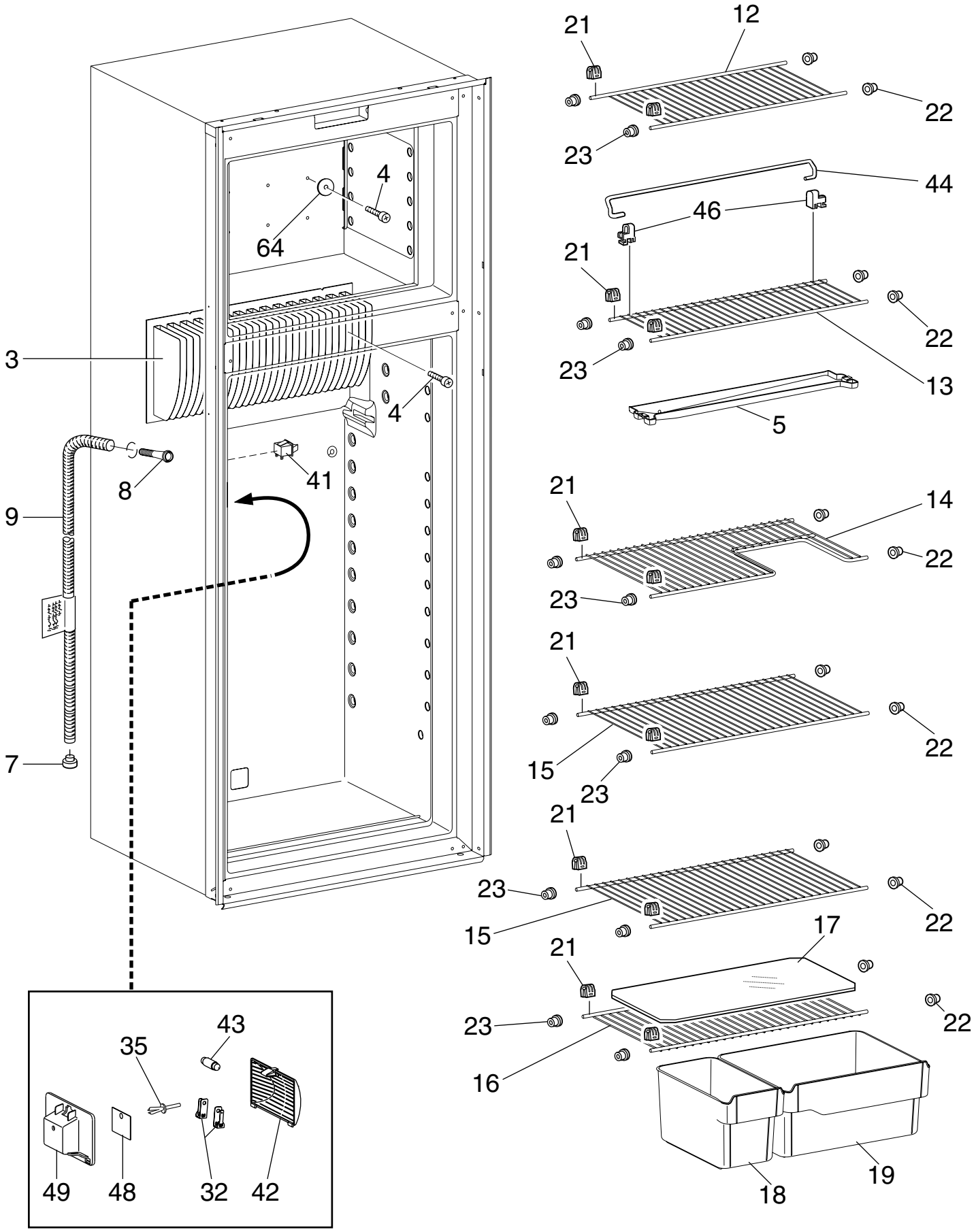


PCMOD3010081

© Dometic, LLC

Exploded view no.: PCMOD3010081
P00003010081

| Matrix | PNC | ELC | ProdDate | Model |
|---|---|---|---|---|
| A | 921146239 | 00 | 20081119 | RM3962 |
| B | 921146240 | 00 | 20081119 | RM3962 |

| Pos | Part No. | Matrix | Description |
|---|---|---|---|
| 3 | 3851121016 | A B | Cooling flange |
| 4 | 3858036019 | A B | Screw,zinc-plated,KFXS B10X38 |
| 5 | 3851040018 | A B | Drop tray,transparent |
| 5 | 3851040026 | A B | Drop tray,white |
| 7 | 2932115013 | A B | Discharge pipe,plug |
| 8 | 3851041016 | A B | Drain,pipe |
| 9 | 2932749019 | A B | Drain hose,L=1375mm |
| 12 | 2932022011 | A B | Shelf,wire,white |
| 13 | 3850994017 | A B | Shelf,wire,white |
| 14 | 3850995014 | A B | Shelf,wire,white |
| 15 | 3850994033 | A B | Shelf,wire,white |
| 16 | 3850994025 | A B | Shelf,wire,white |
| 17 | 2931117218 | A B | Shelf,plate,transparent |
| 18 | 3850992011 | A B | Crisper,small,transparent |
| 18 | 3850992029 | A B | Crisper,small,white |
| 19 | 3850993019 | A B | Crisper,transparent |
| 19 | 3850993027 | A B | Crisper,white |
| 21 | 2932102011 | A B | Shelf support |
| 22 | 2932101013 | A B | Plug |
| 23 | 2932103019 | A B | Plug |
| 32 | 2932108018 | A B | Contact pin |
| 35 | 165521030 | A B | Expansion rivet |
| 41 | 3851000012 | A B | Switch |
| 42 | 3850962014 | A B | Lamp glass |
| 43 | 2007290006 | A B | Lamp,10W,12V |
| 44 | 2007337211 | A B | Rack |
| 46 | 2930693045 | A B | Holder |
| 48 | 3850963012 | A B | Reflector |
| 49 | 3850961016 | A B | Lamp housing |
| 64 | 3858010147 | A B | Washer,aluminium,5.2x22x1.5 |

© Dometic, LLC

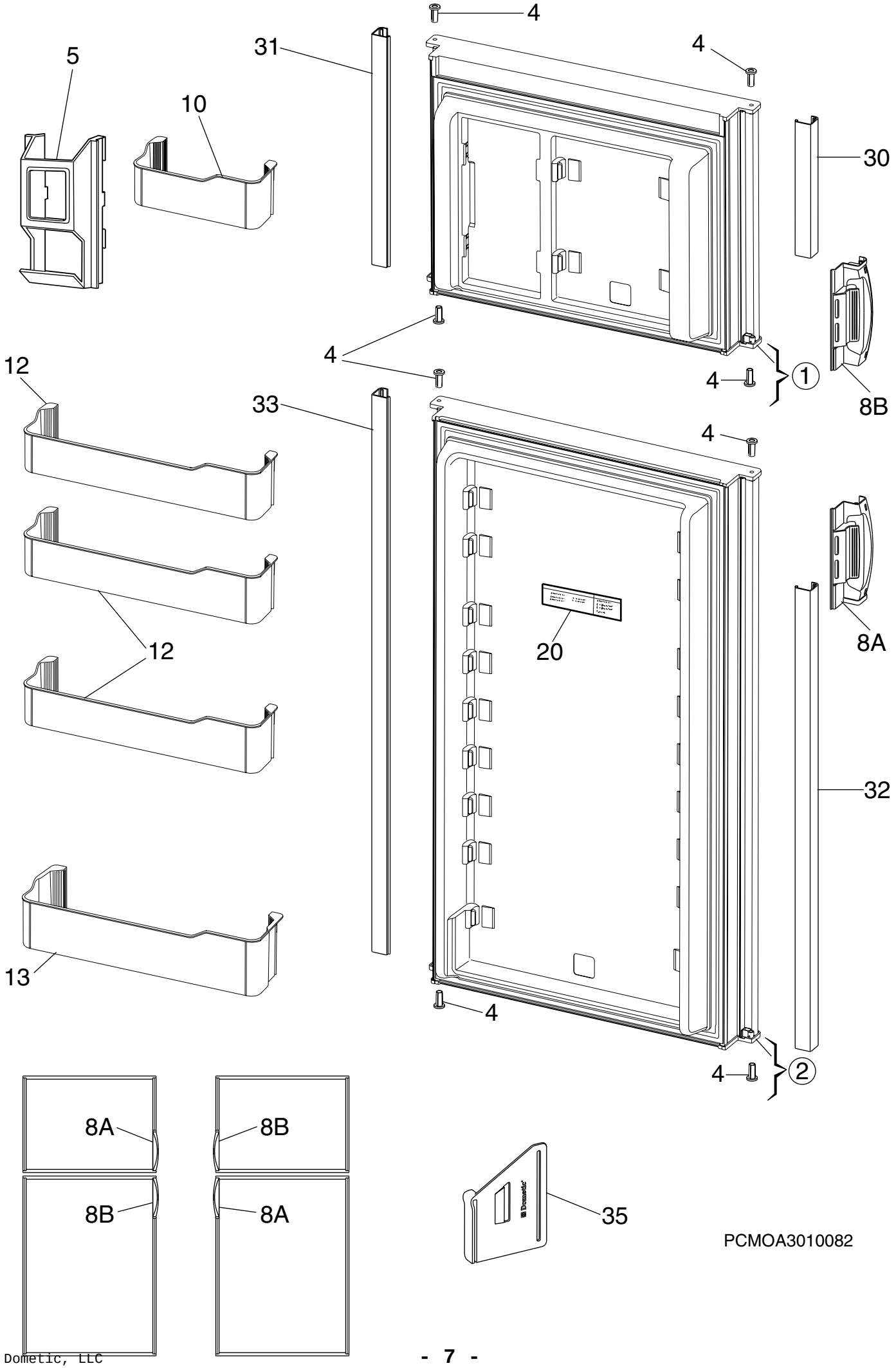
4
4
31
5
10
30
4
4
1
8B
12
33
4
12
20
8A
32
13
4
4
2
8A
8B
8B
8A
35
PCMOA3010082

© Dometic, LLC

Exploded view no.: PCMOA3010082
P00003010082

| Matrix | PNC | ELC | ProdDate | Model |
|---|---|---|---|---|
| A | 921146239 | 00 | 20081119 | RM3962 |
| B | 921146240 | 00 | 20081119 | RM3962 |

| Pos | Part No. | Matrix | Description |
|---|---|---|---|
| 1 | 3850998026 | A B | Freezer door |
| 2 | 3850999024 | A B | Refrigerator door |
| 4 | 2931171066 | A B | Hinge bushing,black |
| 5 | 2932578020 | A B | Juice container,white |
| 5 | 2932578038 | A B | Juice container,transparent |
| 8A | 3851047021 | A B | Handle,black |
| 8B | 3851047013 | A B | Handle,black |
| 10 | 3850973011 | A B | Door shelf,transparent |
| 10 | 3850973029 | A B | Door shelf,white |
| 12 | 3850974019 | A B | Door shelf,transparent |
| 12 | 3850974027 | A B | Door shelf,white |
| 13 | 3850975016 | A B | Door shelf,transparent |
| 13 | 3850975024 | A B | Door shelf,white |
| 20 | 3851235006 | A B | Label |
| 30 | 3850982012 | A B | Profile,side,freezer door,L=251mm |
| 31 | 3850982020 | A B | Profile,side,freezer door,L=435mm |
| 32 | 3850982053 | A B | Profile,side,refrigerator door,L=875mm |
| 33 | 3850982061 | A B | Profile,side,refrigerator door,L=1059mm |
| 35 | 3851206015 | A B | Spacer,door |

© Dometic, LLC

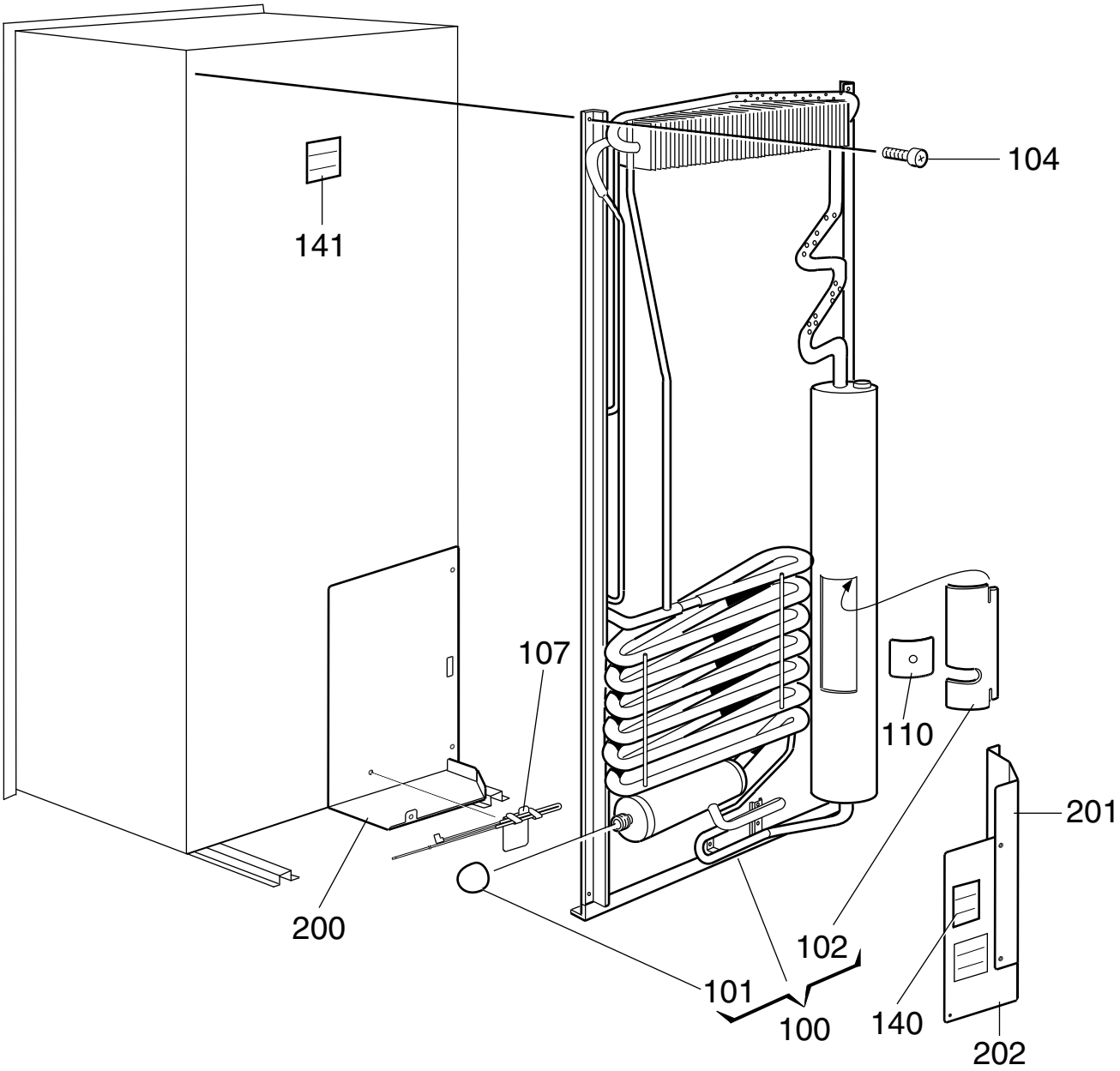


NCMOE2099520

© Dometic, LLC

Exploded view no.: NCMOE2099520
P00003010083

| Matrix | PNC | ELC | ProdDate | Model |
|---|---|---|---|---|
| A | 921146239 | 00 | 20081119 | RM3962 |
| B | 921146240 | 00 | 20081119 | RM3962 |

| Pos | Part No. | Matrix | Description |
|---|---|---|---|
| 100 | 2934926102 | A B | Cooling unit,with,thermal fuse,926 |
| 101 | 173228008 | A B | Cap |
| 102 | 2933557007 | A B | Cover sheet |
| 104 | 3858068012 | A B | Screw,DK 4.8X19 |
| 107 | 3851409015 | A B | Thermal fuse,cpl. |
| 110 | 3851397012 | A B | Cover,for,heater |
| 140 | 3850582002 | A B | Label |
| 141 | 3850583000 | A B | Label |
| 200 | 3851300016 | A B | Cover plate |
| 201 | 3851301014 | A B | Cover plate,side |
| 202 | 3851302012 | A B | Cover plate,back |
| 999 | 8251295005 | A B | User manual |
| | | | not shown |

© Dometic, LLC

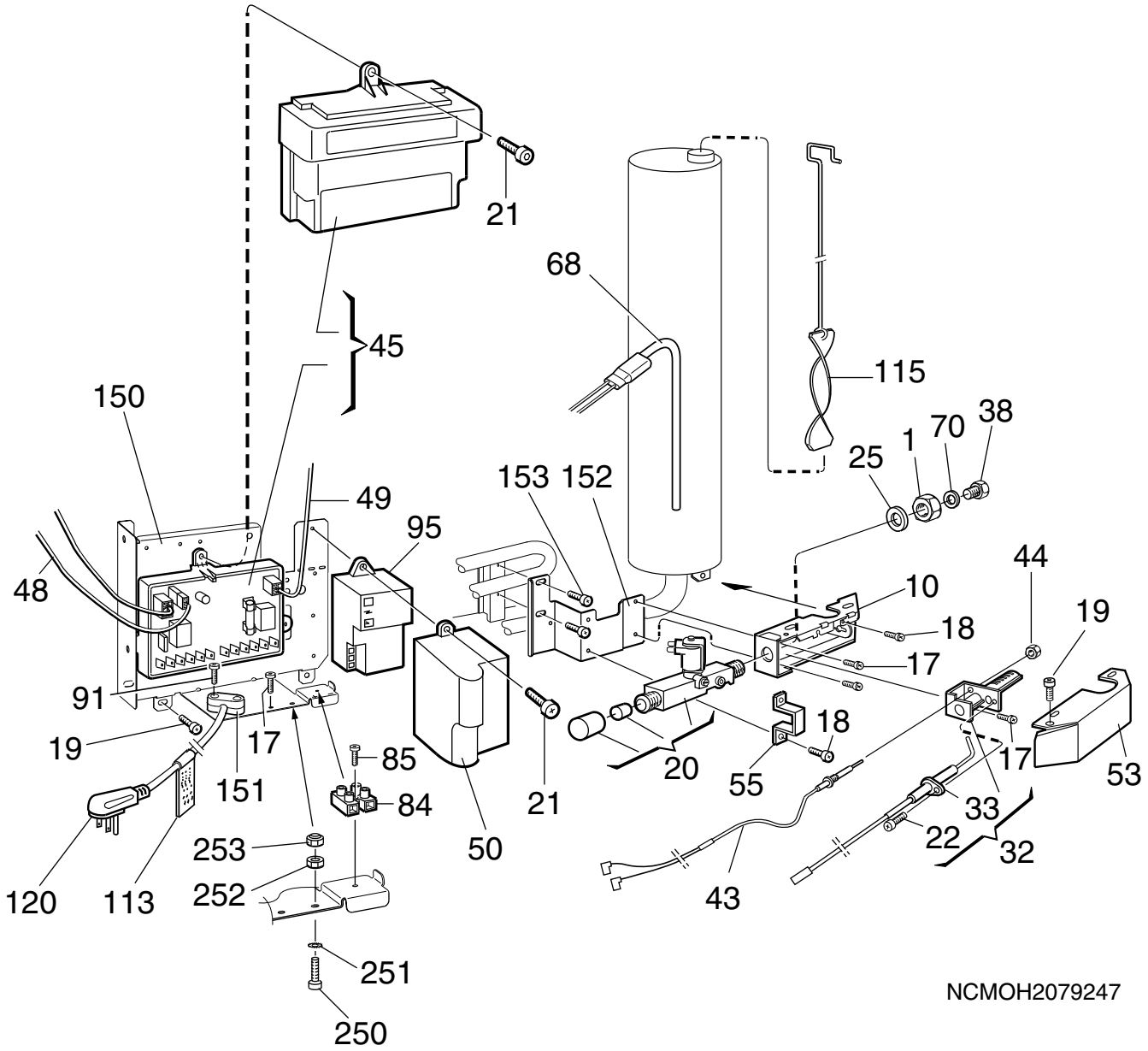
21
68
45
115
150
38
70
1
25
153 152
49
95
44
48
10
19
18
17
91
18
19
17
85
20
17
53
151
55
84
21
33
253
50
22
32
120
113
252
43
251
250
NCMOH2079247

Exploded view no.: NCMOH2079247
P00003010084

| Matrix | PNC | ELC | ProdDate | Model |
|---|---|---|---|---|
| A | 921146239 | 00 | 20081119 | RM3962 |
| B | 921146240 | 00 | 20081119 | RM3962 |

| Pos | Part No. | Matrix | Description |
|---|---|---|---|
| 1 | 140207044 | A B | Nut |
| 10 | 2932603018 | A B | Burner housing |
| 17 | 3858039039 | A B | Screw,zinc-plated,MRX M4X8 |
| 18 | 3858039047 | A B | Screw,zinc-plated,MRX M4X10 |
| 19 | 3858002144 | A B | Screw,zinc-plated,RXS B6X9,5 |
| 20 | 2932615012 | A B | Solenoid valve |
| 21 | 3858002151 | A B | Screw,zinc-plated,RXS B6X13 |
| 22 | 3858005014 | A B | Screw,zinc-plated,RXK B6X9,5 |
| 25 | 3858010071 | A B | Washer,12,5X18,5X1 |
| 32 | 2930697079 | A B | Burner,with,conductor |
| 33 | 2932781012 | A B | Electrode,with,conductor |
| 38 | 2007419217 | A B | Jet,complete,no. 58 |
| 43 | 2932052018 | A B | Thermocouple |
| 44 | 2801043015 | A B | Nut |
| 45 | 3851005011 | A B | Power,module |
| 48 | 3851059042 | A B | Conductor,thermistor |
| 49 | 2954539017 | A B | Conductor,solenoid valve |
| 50 | 2931886010 | A B | Cover |
| 53 | 2932661016 | A B | Cover |
| 55 | 2932662014 | A B | Bracket |
| 68 | 3850644422 | A B | Heater,325W, 120V |
| 70 | 2007457001 | A B | Washer,0,5mm |
| 84 | 3858022019 | A B | Terminal block |
| 85 | 3858002185 | A B | Screw,zinc-plated,RXS B6X25 |
| 91 | 3858002177 | A B | Screw,zinc-plated,RXS B6X19 |
| 95 | 2931132019 | A B | Spark generator |
| 113 | 2932733005 | A B | Label |
| 115 | 2932667047 | A B | Flue baffle |
| 120 | 2002699094 | A B | Cord set |
| 150 | 3850337019 | A B | Bracket |
| 151 | 561014010 | A B | Cable clamp |
| 152 | 3850377015 | A B | Retainer,solenoid valve |
| 153 | 3858018017 | A B | Screw,zinc-plated,M5X25 |
| 250 | 3858004033 | A B | Screw,zinc-plated,MRX M4X16 |
| 251 | 3858011012 | A B | Lock washer,zinc-plated,4,3X8 |
| 252 | 3858009016 | A B | Hexagon nut,zinc-plated,M4X3,2 |
| 253 | 3858028024 | A B | Lock nut,zinc-plated,M4 |

© Dometic, LLC

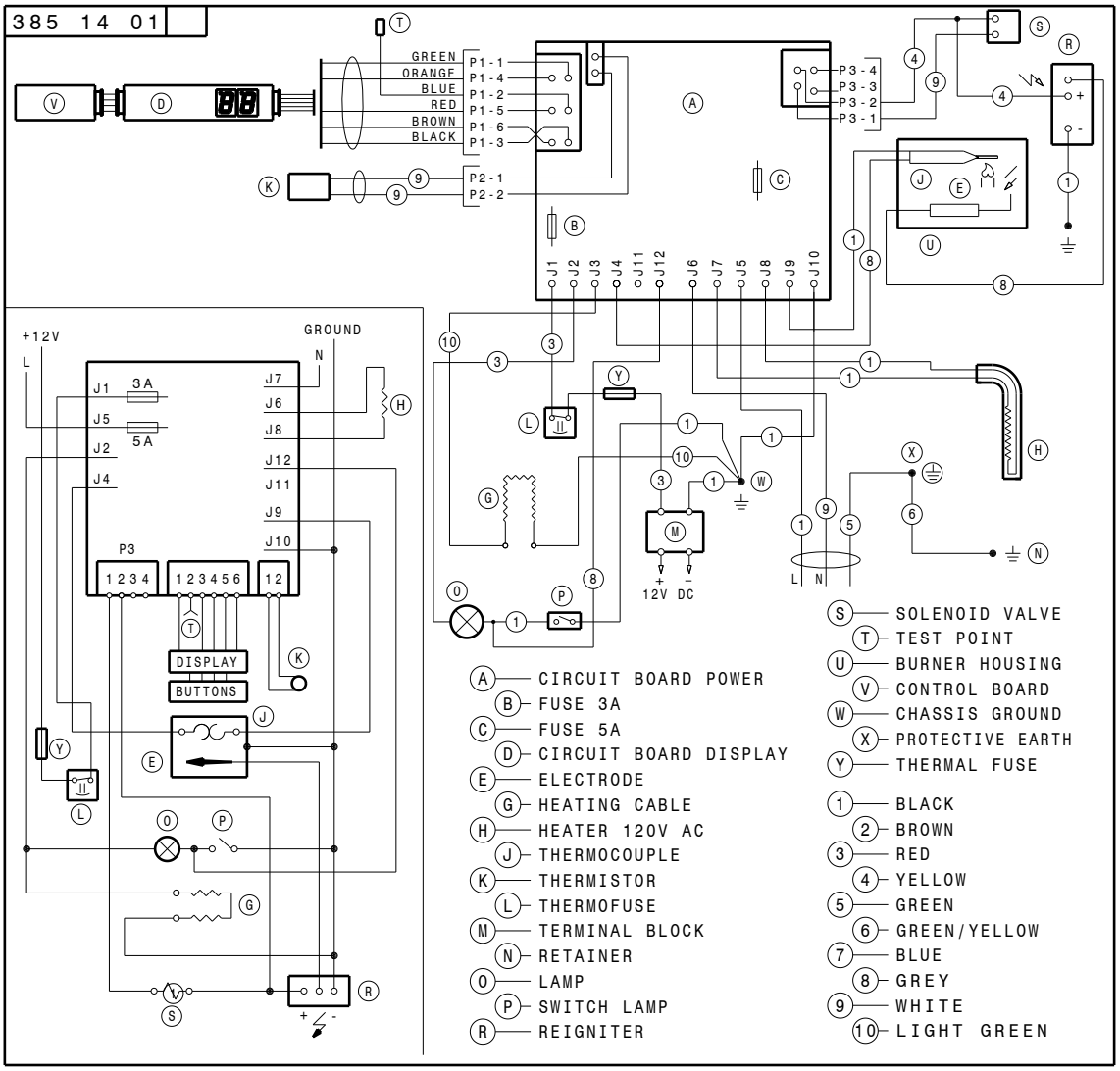
385 14 01
GREEN
ORANGE
BLUE
RED
BROWN
BLACK
P1-1
P1-4
P1-2
P1-5
P1-6
P1-3
P2-1
P2-2
P3-4
P3-3
P3-2
P3-1
J1 J2 J3 J4 J11 J12 J6 J7 J5 J8 J9 J10
+12V
GROUND
L
N
3A
5A
J1
J5
J2
J4
J7
J6
J8
J12
J11
J9
J10
P3
1 2 3 4
1 2 3 4 5 6
1 2
DISPLAY
BUTTONS
12V DC
L N
A CIRCUIT BOARD POWER
B FUSE 3A
C FUSE 5A
D CIRCUIT BOARD DISPLAY
E ELECTRODE
G HEATING CABLE
H HEATER 120V AC
J THERMOCOUPLE
K THERMISTOR
L THERMOFUSE
M TERMINAL BLOCK
N RETAINER
O LAMP
P SWITCH LAMP
R REIGNITER
S SOLENOID VALVE
T TEST POINT
U BURNER HOUSING
V CONTROL BOARD
W CHASSIS GROUND
X PROTECTIVE EARTH
Y THERMAL FUSE
1 BLACK
2 BROWN
3 RED
4 YELLOW
5 GREEN
6 GREEN/YELLOW
7 BLUE
8 GREY
9 WHITE
10 LIGHT GREEN

N38514010