Dometic

Dometic
Spare parts list

When ordering parts, always state:
MODEL NO. - PRODUCT NO. - QUANTITY -
PART NO. - DESCRIPTION
For electric details also state:
VOLTAGE - WATTAGE
Add a 0 in front of part numbers with less than 10 digits

Recreational Vehicle Refrigerator

PNC	Voltage	Brand	Model	Door	Market
921146370		Dometic	RM4805		AU - NZ

SERVICE OFFICE
Dometic Motala

Publication-No.
599707742
2009/05/08

© Dometic

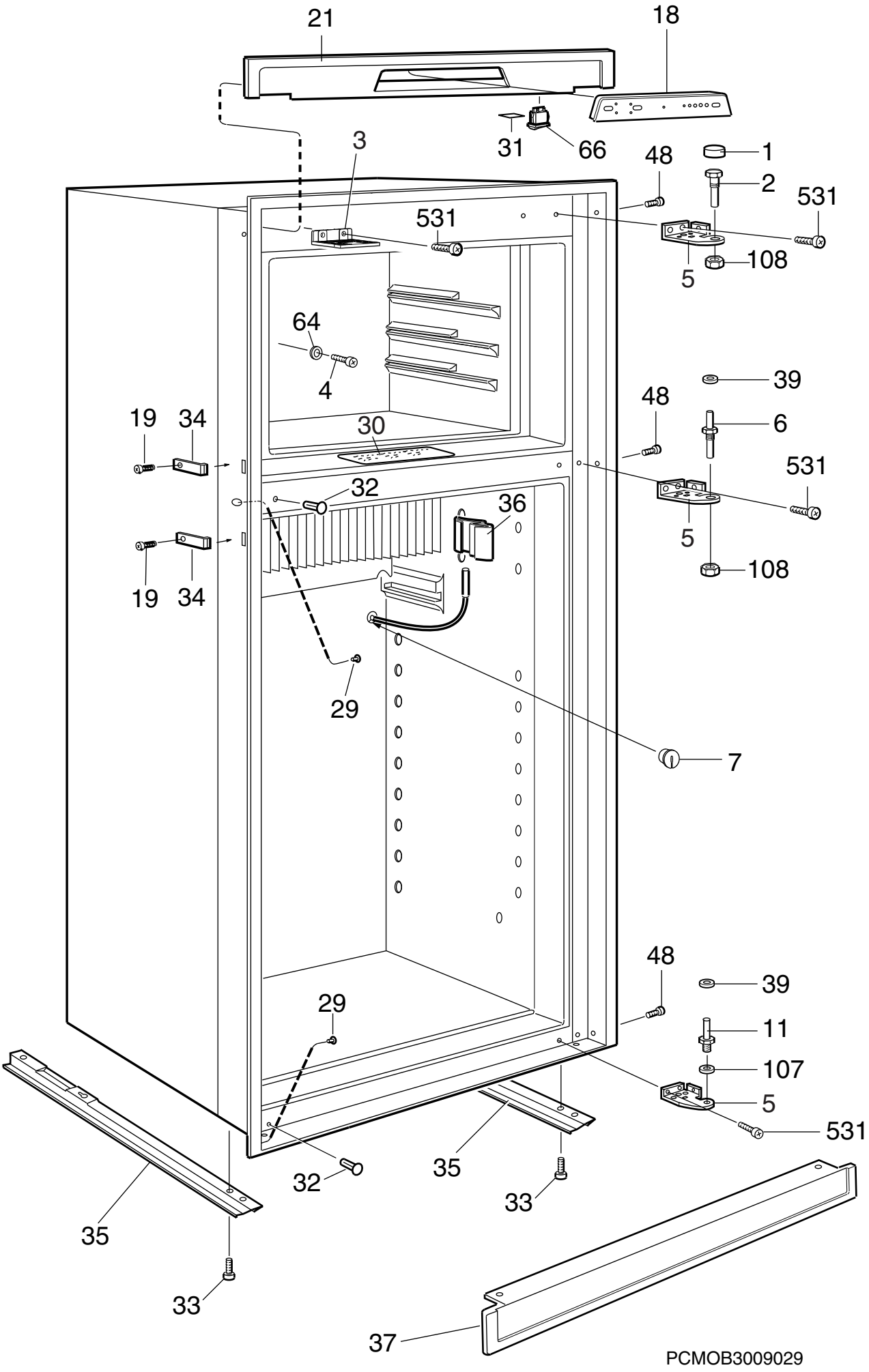
21
18
31
66
3
48
1
2
531
531
108
5
64
4
39
48
6
19
34
30
531
32
36
5
108
19
34
29
7
48
39
29
11
107
5
531
35
32
33
35
33
37
PCMOB3009029

© Dometic

Exploded view no.: PCMOB3009029
P00003006823

Matrix	PNC	ELC	ProdDate	Model
A	921146370	00	20080424	RM4805

Pos	Part No.	Matrix	Description
1	2932736081	A	Cover,black
2	2932647015	A	Hinge pin,upper
3	3851466015	A	Bracket,black
4	3858036019	A	Screw,zinc-plated,KFXS B10X38
5	2932643030	A	Hinge,black
6	2932648021	A	Hinge pin,black
7	2002301006	A	Cover
11	2932649011	A	Hinge pin,lower
18	3850741020	A	Display,assembly,black,AESIII
19	3858002052	A	Screw,zinc-plated,RXS B6X6,5
21	2932641034	A	Front,black
29	2930740077	A	Cover,black
30	3850953005	A	Instruction plate
31	2932779008	A	Label
32	3850585039	A	Plug,black
33	3858039096	A	Screw,zinc-plated,MRX M5X14
34	2932855014	A	Fastening bow
35	2932660018	A	Rail
36	3851088017	A	Bracket,thermistor
37	2932690049	A	Base cover,black
39	3858010022	A	Washer,black,5,5X12X1
48	3858004058	A	Screw,zinc-plated,MRX M4X4
64	3858010147	A	Washer,aluminium,5.2x22x1.5
66	2932680024	A	Switch
107	3858010113	A	Washer,zinc-plated,BRB 6,4X12,5
108	3858009057	A	Nut,black,ML6 M6
531	3858039047	A	Screw,zinc-plated,MRX M4X10
999	2932750116	A	Door reversing kit,right-left,black
			not shown

© Dometic

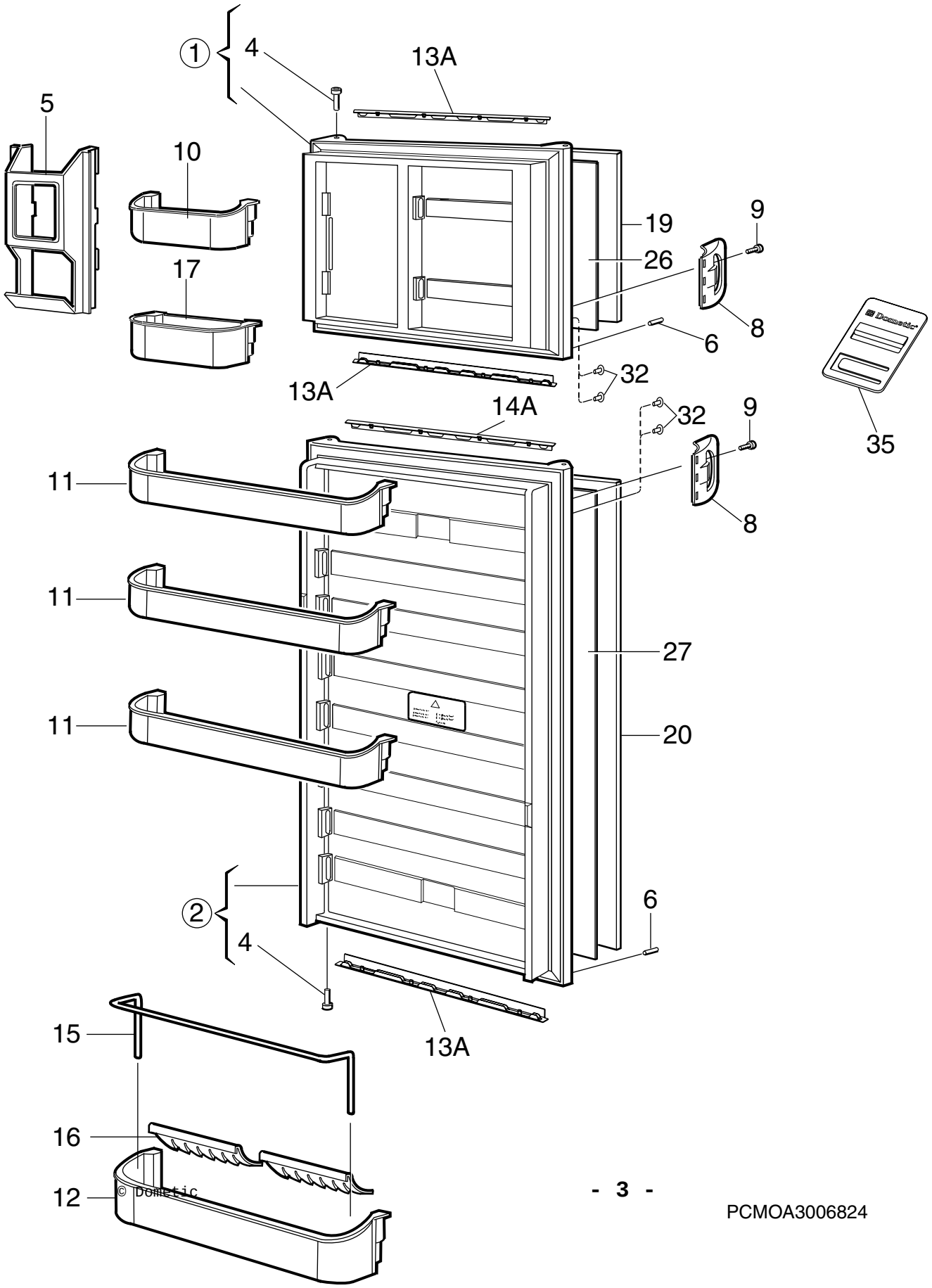

© Dometic

PCMOA3006824

Exploded view no.: PCMOA3006824
P00003006824

Matrix	PNC	ELC	ProdDate	Model
A	921146370	00	20080424	RM4805

Pos	Part No.	Matrix	Description
1	2932561190	A	Freezer door,right,black
2	2932562065	A	Refrigerator door,right,black
4	2931171066	A	Hinge bushing,black
5	2932578020	A	Juice container,white
6	2932588011	A	Stopper
8	3851174023	A	Handle,black
9	3858000049	A	Screw,black,PT 50X26
10	2932577014	A	Door shelf
11	2932576016	A	Door shelf
12	2932575018	A	Bottle shelf
13A	3850919022	A	Decoration strip,black
14A	3850919063	A	Decoration strip,black
15	2932585033	A	Rack
16	2932658012	A	Bottle holder,white
17	2932579010	A	Ice container
19	3851406011	A	Door panel,freezer door,silver
20	3851406037	A	Door panel,refrigerator door,silver
26	2932469071	A	Cushion,door panel
27	2932469063	A	Cushion,door panel
32	3850625025	A	Cover,black
35	3850781018	A	Spacer,door

© Dometic

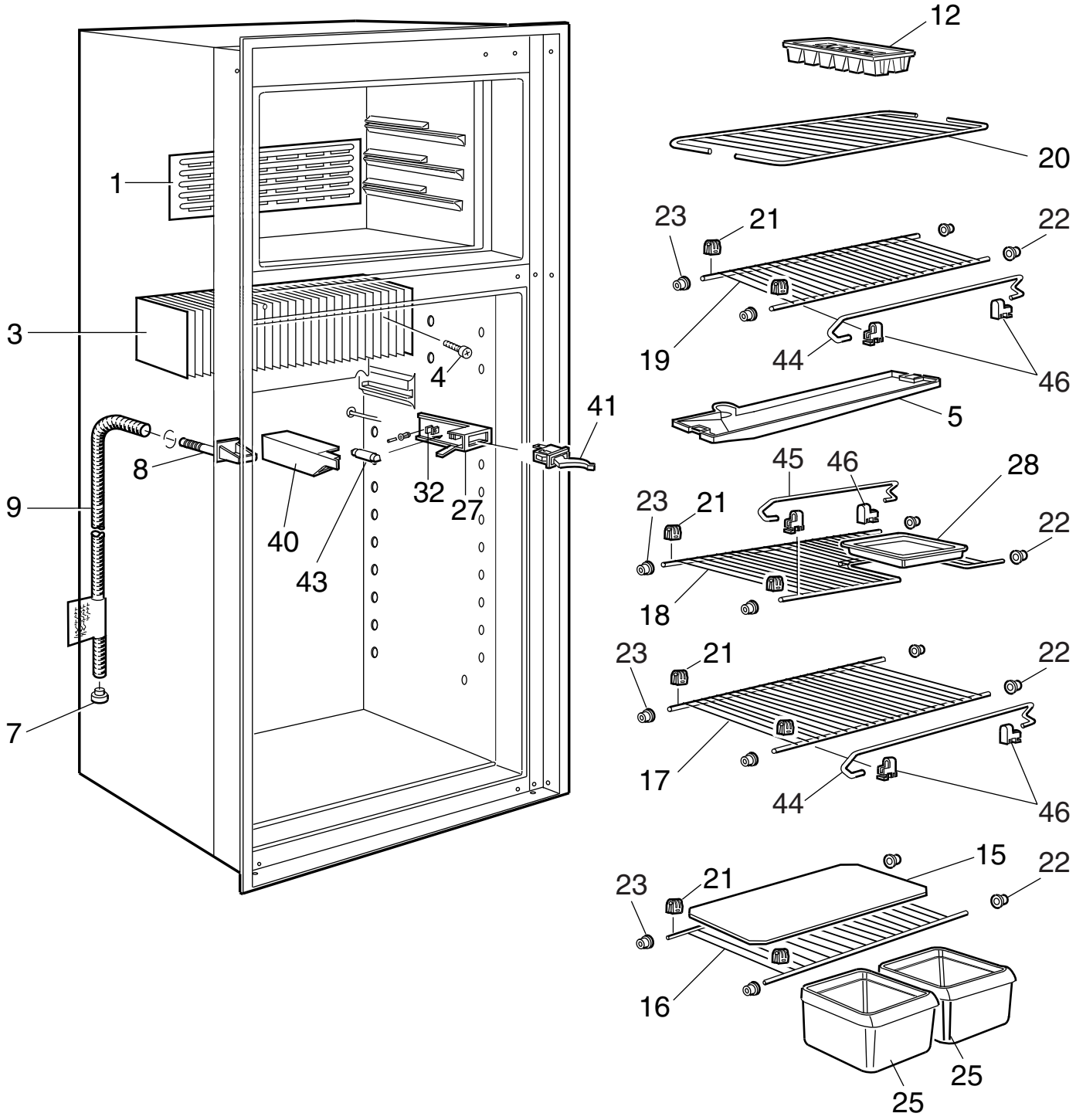

NCMOD2092207

Exploded view no.: NCMOD2092207
P00003006825

Matrix	PNC	ELC	ProdDate	Model
A	921146370	00	20080424	RM4805

Pos	Part No.	Matrix	Description
1	2932728013	A	Coverplate
3	2932630011	A	Cooling flange
4	3858036019	A	Screw,zinc-plated,KFXS B10X38
5	2932624014	A	Evaporation tray
7	2932115013	A	Discharge pipe,plug
8	2932635010	A	Drain
9	2932749019	A	Drain hose,L=1375mm
12	2930400003	A	Ice tray
15	2931117176	A	Shelf,plastic,transparent
16	3850324025	A	Grating shelf
17	3850324017	A	Grating shelf
18	3850325014	A	Grating shelf
19	3850324033	A	Grating shelf
20	2932627025	A	Grating shelf,white
21	2932102011	A	Shelf support
22	2932101013	A	Plug
23	2932103019	A	Plug
25	2932621010	A	Vegetable box,white
27	2932523018	A	Lampholder
28	2932636018	A	Box
32	2932108018	A	Contact pin
40	2932106012	A	Lamp cover
41	2932665017	A	Switch
43	2007290006	A	Lamp,10W,12V
44	2007337211	A	Rack
45	2007337120	A	Rack
46	2930693045	A	Holder

© Dometic

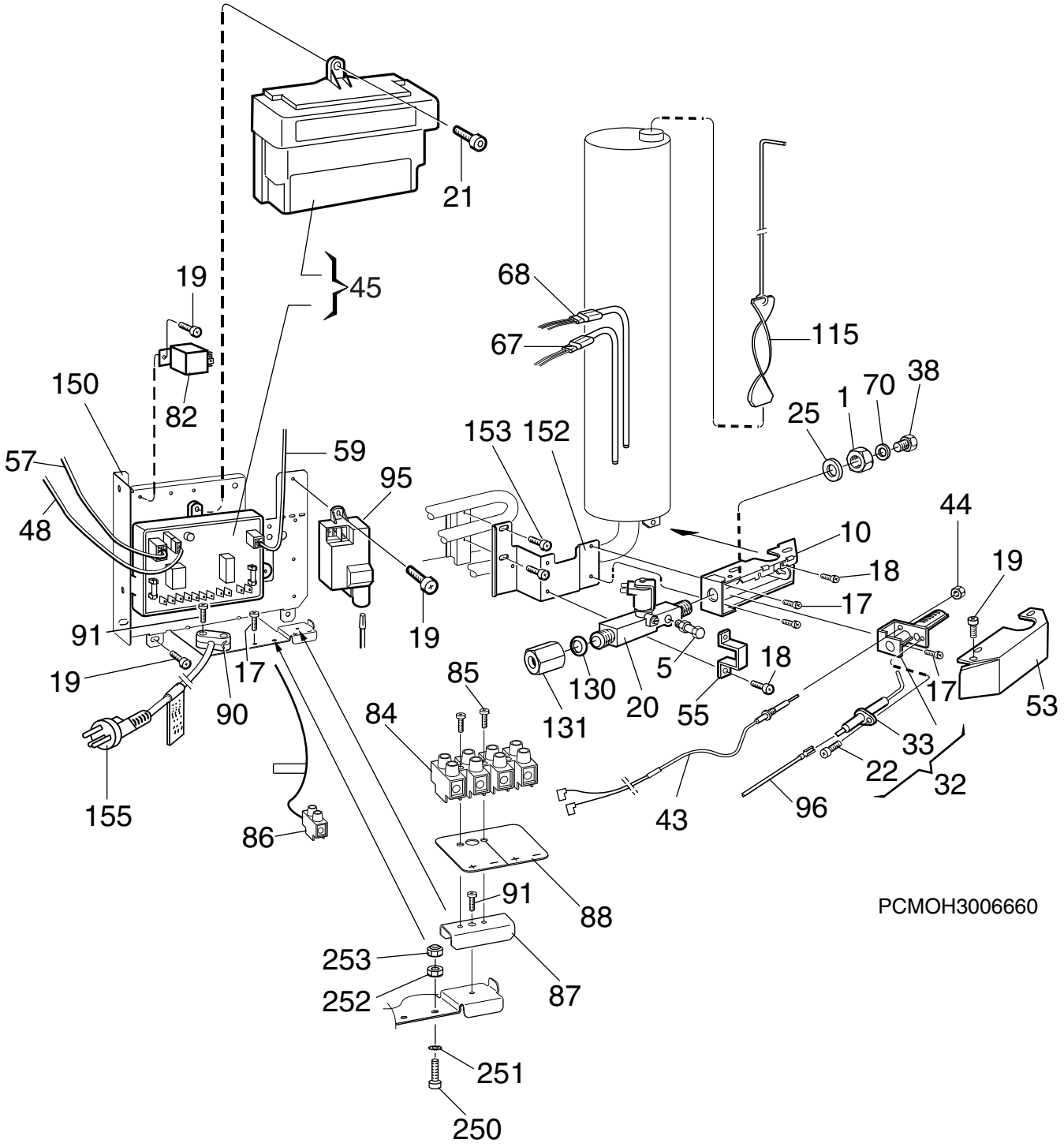
21
45
19
82
150
57
48
59
95
19
91
19
17
90
155
86
68
67
115
38
70
1
25
153
152
44
10
18
19
17
5
18
130
131
20
55
85
84
17
53
33
22
32
43
96
91
88
253
252
87
251
250
PCMOH3006660

Exploded view no.: PCMOH3006660
P00003006826

Matrix	PNC	ELC	ProdDate	Model
A	921146370	00	20080424	RM4805

Pos	Part No.	Matrix	Description
1	140207044	A	Nut
5	2932097013	A	Nipple
10	2932603018	A	Burner housing
17	3858039039	A	Screw,zinc-plated,MRX M4X8
18	3858039047	A	Screw,zinc-plated,MRX M4X10
19	3858002144	A	Screw,zinc-plated,RXS B6X9,5
20	2932615038	A	Solenoid valve
21	3858002151	A	Screw,zinc-plated,RXS B6X13
22	3858005014	A	Screw,zinc-plated,RXK B6X9,5
25	3858010071	A	Washer,12,5X18,5X1
32	2930697061	A	Burner
33	2930379009	A	Electrode
38	2007419217	A	Jet,complete,no. 58
43	2932052018	A	Thermocouple
44	2801043015	A	Nut
45	3850610019	A	Electronics module,assembly,AESIII
48	3851059042	A	Conductor,thermistor
53	2932661016	A	Cover
55	2932662014	A	Bracket
57	2954542037	A	Conductor,PCB
59	2954540031	A	Conductor,complete,solenoid valve
67	3850646039	A	Heater,275W, 12V
			From serial no. 91805001
67	3850646096	A	Heater,275W, 12V
			Up to serial no. 91208010
68	3850644554	A	Heater,325W, 240V
70	2007457001	A	Washer,0,5mm
82	3851334007	A	Relay
84	3858022035	A	Terminal block
85	3858002185	A	Screw,zinc-plated,RXS B6X25
86	3858062015	A	Terminal block
87	3851420012	A	Bracket,terminal block
88	3851421010	A	Plate,12V
90	2932342013	A	Cable clamp
91	3858002177	A	Screw,zinc-plated,RXS B6X19
95	2932347012	A	Spark generator
96	2931360057	A	Ignition cable
115	2007590066	A	Flue,baffle
130	2930500000	A	Seal washer,copper
131	3850743018	A	Connection,nipple
150	3851474019	A	Bracket
152	3850377015	A	Retainer,solenoid valve
153	3858018017	A	Screw,zinc-plated,M5X25
155	3850555040	A	Cord set

© Dometic

Exploded view no.: PCMOH3006660
P00003006826

Matrix	PNC	ELC	ProdDate	Model
A	921146370	00	20080424	RM4805

Pos	Part No.	Matrix	Description
250	3858004033	A	Screw,zinc-plated,MRX M4X16
251	3858011012	A	Lock washer,zinc-plated,4,3X8
252	3858009016	A	Hexagon nut,zinc-plated,M4X3,2
253	3858028024	A	Lock nut,zinc-plated,M4

© Dometic

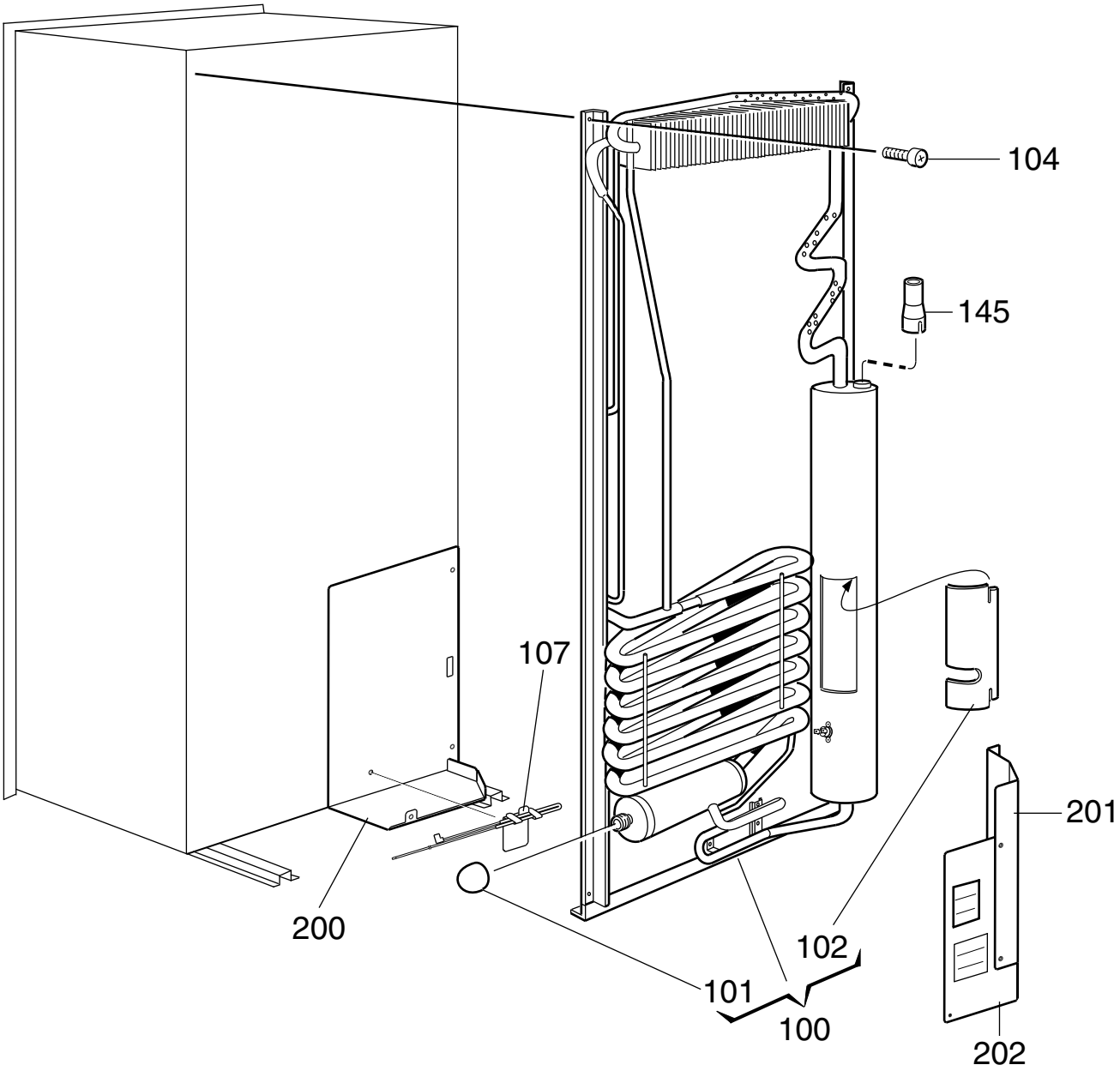

PCMOE3006661

Exploded view no.: PCMOE3006661
P00003006827

Matrix	PNC	ELC	ProdDate	Model
A	921146370	00	20080424	RM4805

Pos	Part No.	Matrix	Description
100	2934806106	A	Cooling unit,with,thermal fuse,806
101	173228008	A	Cap
102	2933557007	A	Cover sheet
104	3858068012	A	Screw,DK 4.8X19
107	3851409015	A	Thermal fuse,cpl.
145	2932195015	A	Adaptor
200	3851300016	A	Cover plate
201	3851301014	A	Cover plate,side
202	3851302012	A	Cover plate,back
999	8251240084	A	User manual Up to serial no. 91208010
999	8251240092	A	User manual From serial no. 91805001

© Dometic