Dometic

Dometic
Spare parts list

When ordering parts, always state:
MODEL NO. - PRODUCT NO. - QUANTITY -
PART NO. - DESCRIPTION
For electric details also state:
VOLTAGE - WATTAGE
Add a 0 in front of part numbers with less than 10 digits

Recreational Vehicle Refrigerator

PNC	Voltage	Brand	Model	Door	Market
921148337		Dometic	RM1350		CA - US

SERVICE OFFICE
USA
Dometic, LLC
2320 Industrial Parkway
Elkhart, IN 46516
574-294-2511

CANADA
Dometic, LLC
46 Zatonski, Unit3
Brantford, ON N3T 5L8
CANADA
519-720-9578

For Service Center Assistance, Call:
800-544-4881

Publication-No.
599531556
2009/05/28

© Dometic, LLC

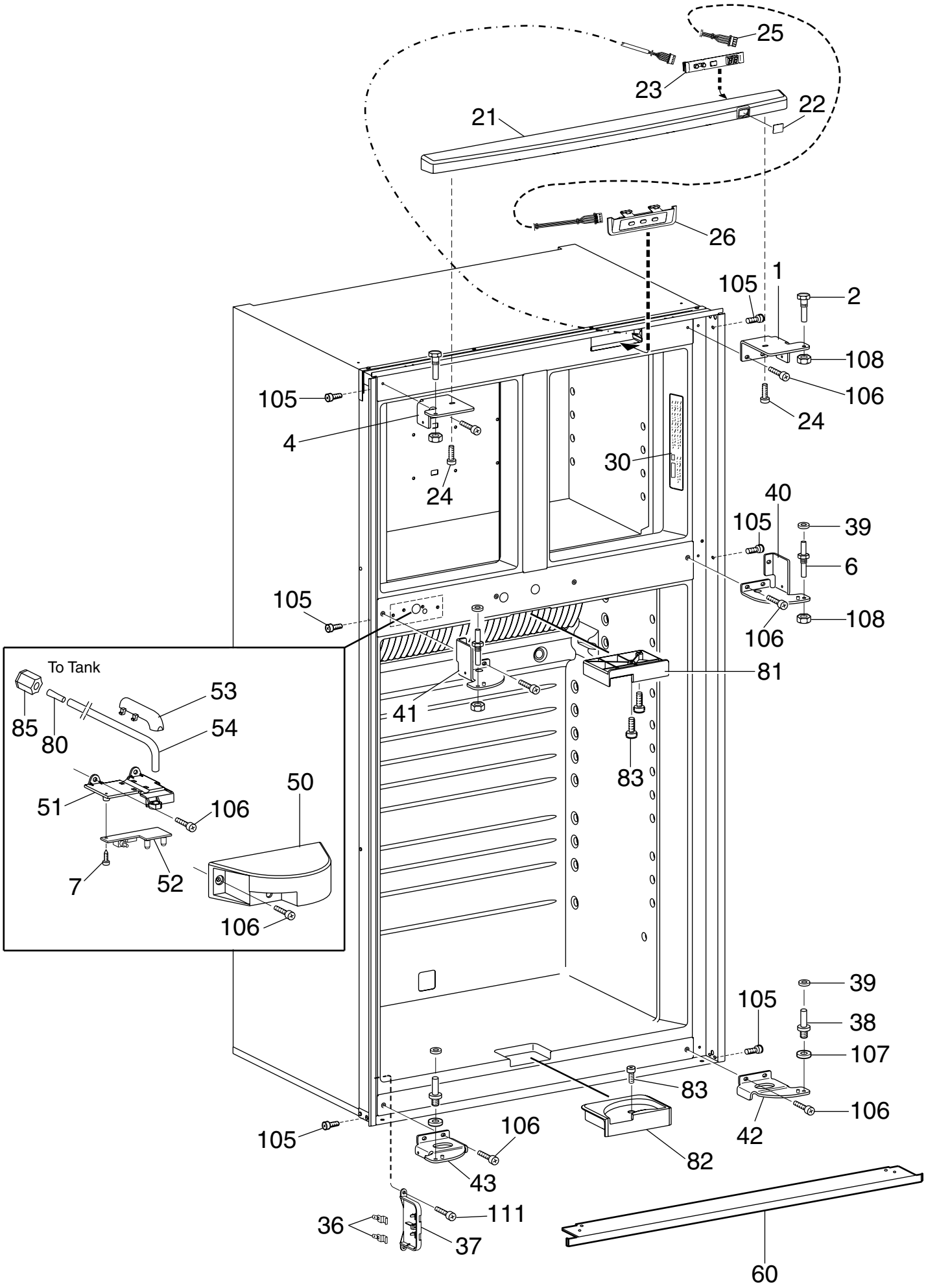
25
23
22
21
26
1
105
2
108
106
24
105
4
24
30
40
105
39
6
105
108
106
81
41
83
To Tank
53
85
80
54
51
106
50
7
52
106
39
105
38
107
83
106
42
105
106
82
43
111
36
37
60
NCMOB2085811

© Dometic, LLC

Exploded view no.: NCMOB2085811
N00002098105

Matrix	PNC	ELC	ProdDate	Model
A	921148337	00	20071107	RM1350

Pos	Part No.	Matrix	Description
1	3850989025	A	Hinge,black
2	2932647015	A	Hinge pin,upper
4	3850989017	A	Hinge,black
6	2932648021	A	Hinge pin,black
7	3858002102	A	Screw,zinc-plated,RXS B4X9,5
21	3851073019	A	Front,black
22	3850970017	A	Lens
23	3850969019	A	Pcb
24	3858006012	A	Screw,PT PH4x10
25	2954568016	A	Harness
26	3850964010	A	Control panel,cpl.
30	3851035000	A	Instruction plate
36	3851212013	A	Contact plate
37	3851211015	A	Holder
38	2932649029	A	Hinge pin
39	3858010022	A	Washer,black,5,5X12X1
40	3851230049	A	Hinge,cpl.
41	3851230031	A	Hinge,cpl.
42	3851230023	A	Hinge,cpl.,lower
43	3851230015	A	Hinge,cpl.,lower
50	3851066013	A	Cover
51	3851067011	A	Holder
52	3851144018	A	Control pcb
53	3851068019	A	Holder,Hose
54	3851127039	A	Hose,water,L=270mm, 10-5/8"
60	2932664093	A	Base cover,black
80	3108708185	A	Insert,Inlet
81	3851102016	A	Guiding device,upper
82	3851103014	A	Guiding device,lower
83	3858002300	A	Screw,RXS 4.2X25
85	3851117014	A	Nut,1/2"
105	3858004041	A	Screw,MRX 4x6 FZ
106	3858103017	A	Screw,black,M4X10
107	3858010113	A	Washer,zinc-plated,BRB 6,4X12,5
108	3858009057	A	Nut,black,ML6 M6
111	3858002201	A	Screw,zinc-plated,RXS B8X9,5

© Dometic, LLC

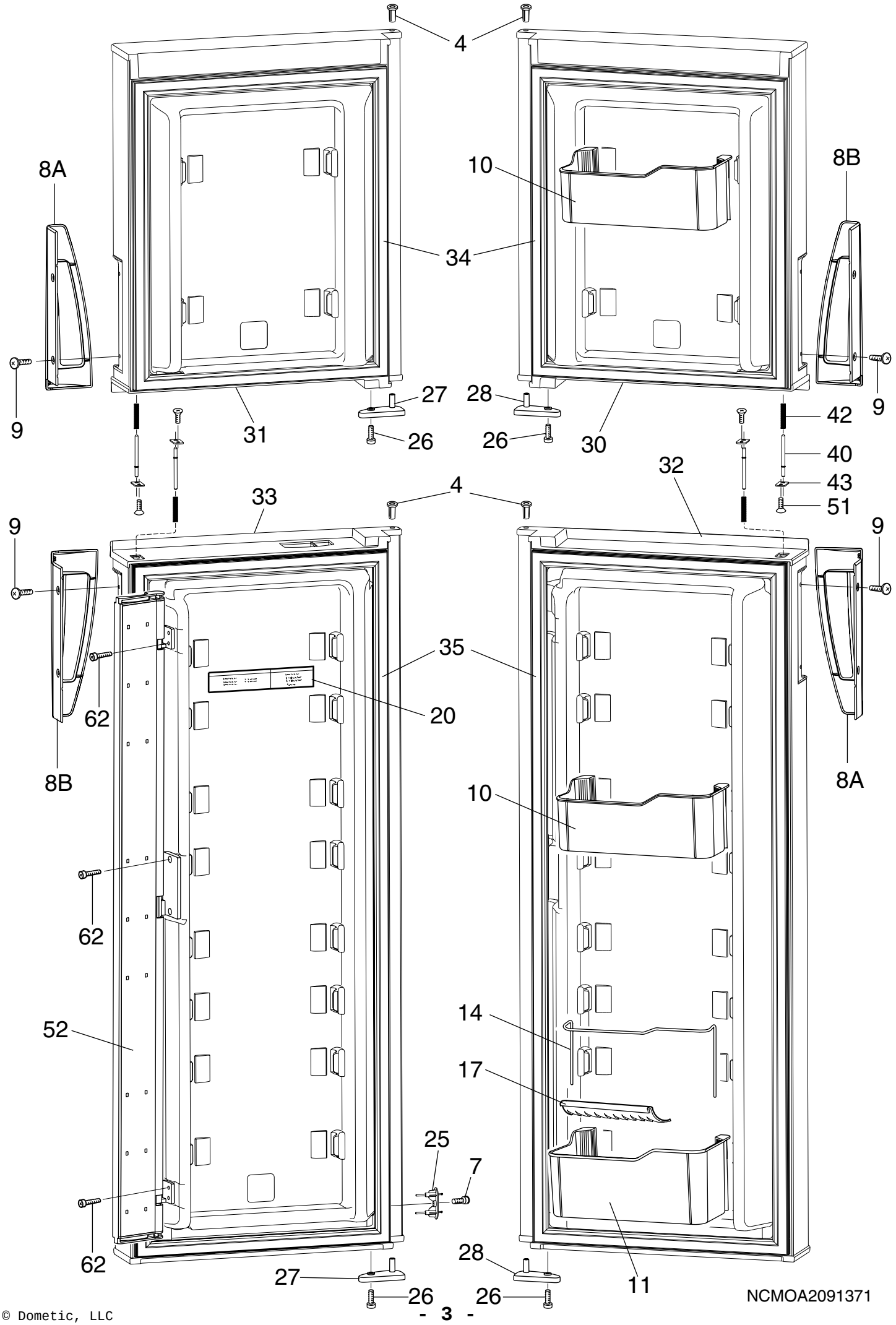
4
4
8A
10
8B
34
9
9
27
28
42
9
31
26
26
30
40
32
43
4
33
51
9
9
35
62
20
8B
8A
10
62
14
52
17
25
7
62
28
27
26
26
11
NCMOA2091371

© Dometic, LLC

Exploded view no.: NCMOA2091371
N00002098106

Matrix	PNC	ELC	ProdDate	Model
A	921148337	00	20071107	RM1350

Pos	Part No.	Matrix	Description
4	2931171066	A	Hinge bushing,black
7	3858002102	A	Screw,zinc-plated,RXS B4X9,5
8A	3851159032	A	Handle
8B	3851159040	A	Handle
9	3858089018	A	Screw,black,EML 5X10
10	3850973011	A	Door shelf,transparent
11	3851052013	A	Door shelf,transparent
14	3850976022	A	Rack
17	2932658046	A	Bottle holder,white,L=130mm, (5-1/8")
20	3851235006	A	Label
25	3851214019	A	Contact pin,cpl.
26	3858006137	A	Screw,PH ETP 3.5X10
27	3851244016	A	Door stop,left
28	3851244024	A	Door stop,right
30	3851169155	A	Freezer door,stainless,right
31	3851169163	A	Freezer door,stainless,left
32	3851170211	A	Refrigerator door,stainless,right
33	3851170237	A	Refrigerator door,stainless,left
34	3851228027	A	Door gasket,Freezer
35	3851228019	A	Door gasket,refrigerator
40	3851092019	A	Lock bar
42	3850497011	A	Spring
43	3850496013	A	Plate
51	3858071024	A	Screw,black,ETP 40X14
52	3851104038	A	Flap,cpl.
62	3858002276	A	Screw,zinc-plated,RXS B8, 4,2x16

© Dometic, LLC

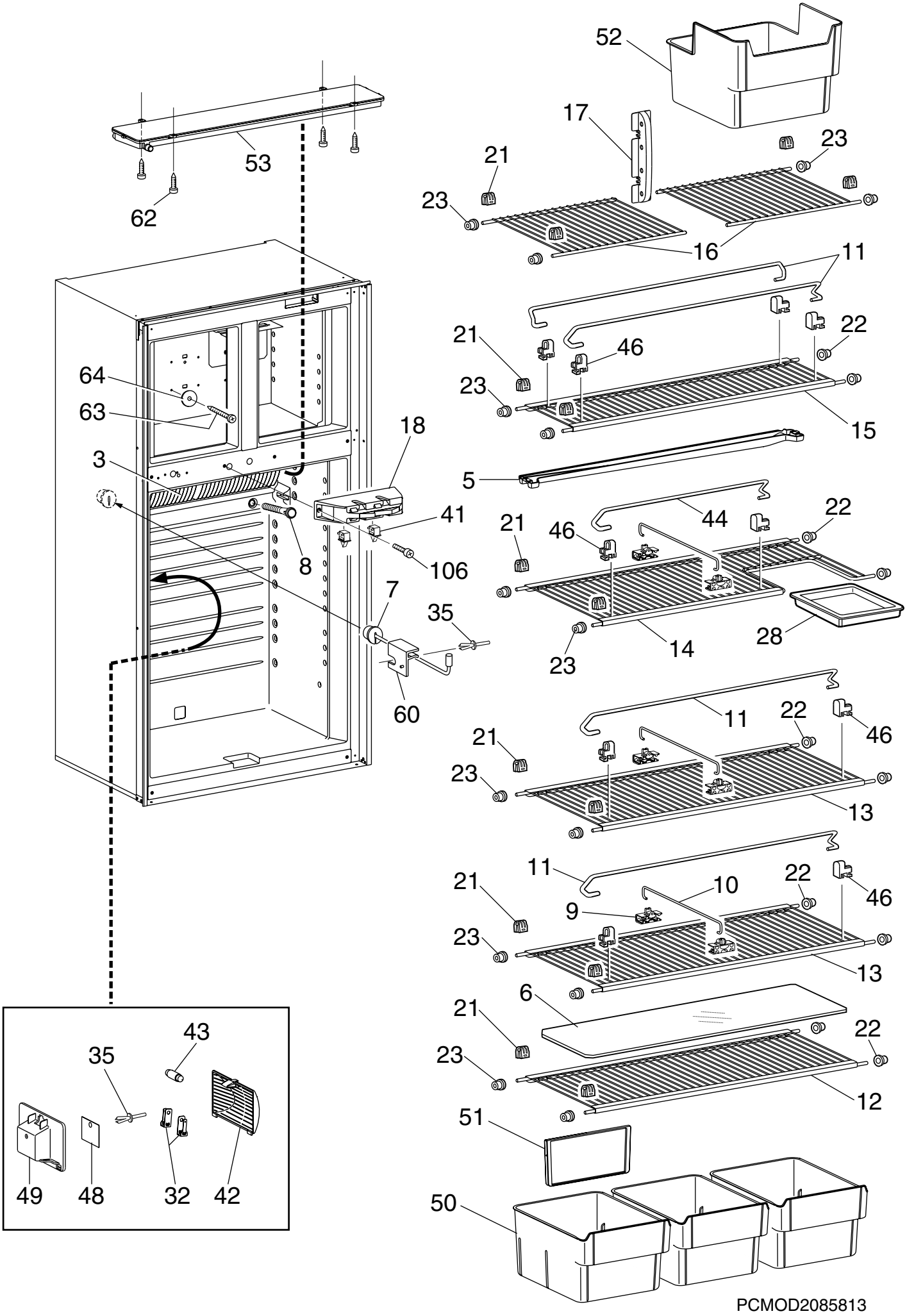
52
17
23
21
23
16
11
21
46
22
23
15
64
63
18
3
5
41
44
22
21
46
8
106
7
35
28
14
23
60
11
22
46
21
23
13
11
10
22
46
21
9
23
13
6
21
22
23
12
51
50
43
35
49
48
32
42
PCMOD2085813

© Dometic, LLC

Exploded view no.: PCMOD2085813
N00002098107

Matrix	PNC	ELC	ProdDate	Model
A	921148337	00	20071107	RM1350

Pos	Part No.	Matrix	Description
3	3851166011	A	Cooling flange
5	3851050017	A	Drop tray,transparent
6	2931117226	A	Shelf,plastic
7	2002301006	A	Cover
8	3851229017	A	Drain,pipe
9	3851208011	A	Holder,sliding type
10	3851209019	A	Rack
11	2007337252	A	Rack
12	3851236012	A	Shelf,wire,cpl.
13	3851236020	A	Shelf,wire,cpl.
14	3851237010	A	Shelf,wire,cpl.
15	3851236038	A	Shelf,wire,cpl.
16	3851023014	A	Shelf,wire
17	3851153019	A	Shelf support,rear
18	3851075014	A	Door,latch,cpl.
21	2932102011	A	Shelf support
22	2932101013	A	Plug
23	2932103019	A	Plug
28	2932636018	A	Box
32	2932108018	A	Contact pin
35	165521030	A	Expansion rivet
41	3851000012	A	Switch
42	3850962014	A	Lamp glass
43	2007290006	A	Lamp,10W,12V
44	2007337179	A	Rack
46	2930693045	A	Holder
48	3850963012	A	Reflector
49	3850961016	A	Lamp housing
50	3851089015	A	Crisper,transparent
51	3851090013	A	Divider
52	3851118012	A	Ice container,transparent
53	3851069017	A	Water tank,cpl.
60	3850679014	A	Bracket,thermistor
62	3858002268	A	Screw,RXS B8X19
63	3858036027	A	Screw,KFXS 4.8X55
64	3858010147	A	Washer,aluminium,5.2x22x1.5
106	3858103017	A	Screw,black,M4X10

© Dometic, LLC

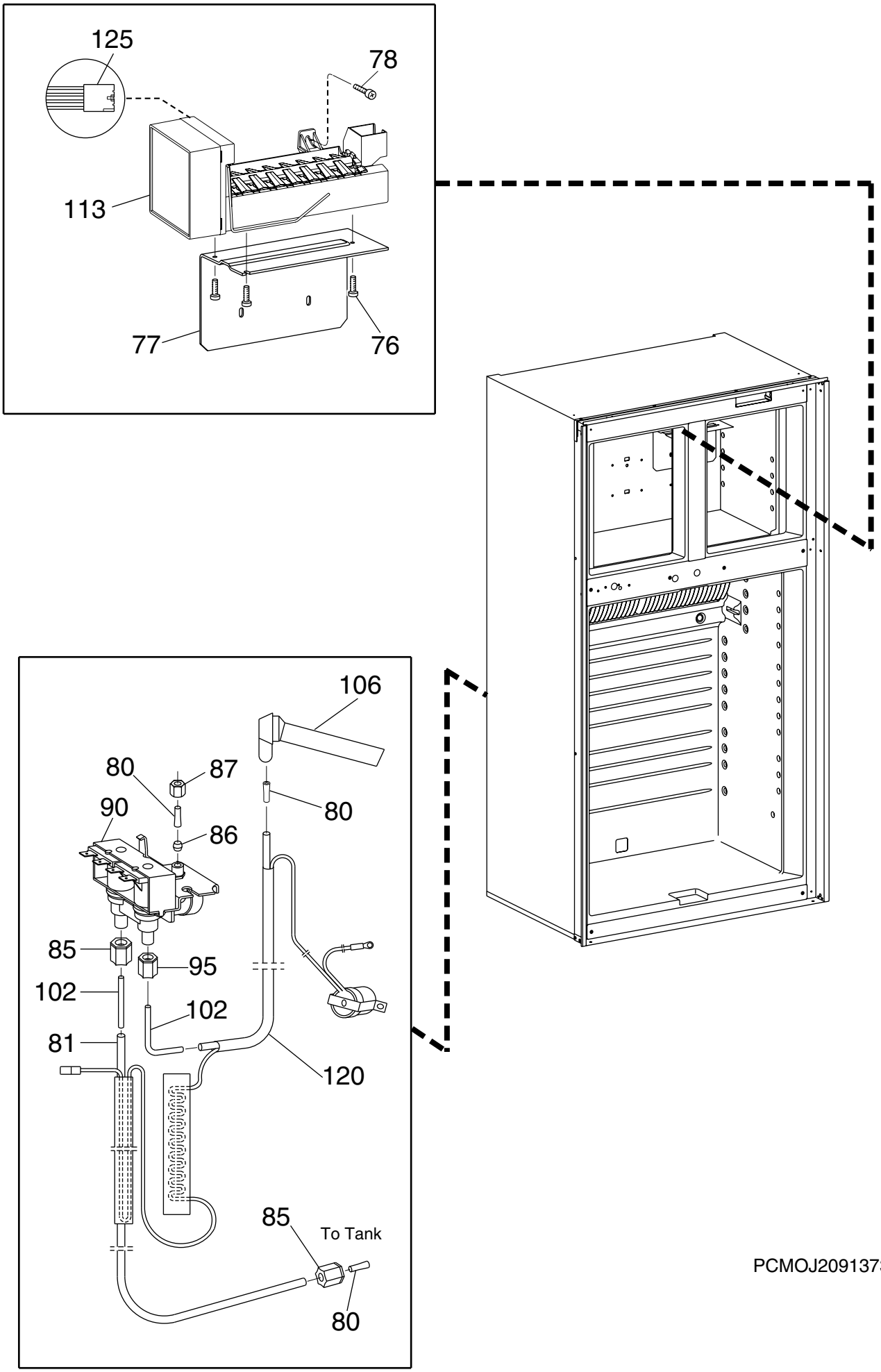
125
78
113
77
76
106
80
87
90
80
86
85
95
102
102
81
120
85
To Tank
80
PCMOJ2091373

© Dometic, LLC

Exploded view no.: PCMOJ2091373
N00002098108

Matrix	PNC	ELC	ProdDate	Model
A	921148337	00	20071107	RM1350

Pos	Part No.	Matrix	Description
76	3858005048	A	Screw,stainless,RXK 4,2X13 PH2
77	3851142012	A	Shelf,ice-maker
78	3858004181	A	Screw,stainless,MRX M4X16
80	3108708185	A	Insert,Inlet
81	3851127021	A	Hose,water,valve,L=1540mm, 63-5/8"
85	3851117014	A	Nut,1/2"
86	3108706296	A	Ferrule,Inlet
87	3108706288	A	Nut,brass,Inlet
90	3851116024	A	Valve,water,2-ways
95	2930839010	A	Nut,7/16"
102	3850220017	A	Insert,copper,water inlet valve
106	3851203012	A	Filling tube,ice-maker
113	3108705553	A	Ice-maker
120	3850688049	A	Kit,heater,water inlet valve
125	2954578015	A	Harness,ice-maker

© Dometic, LLC

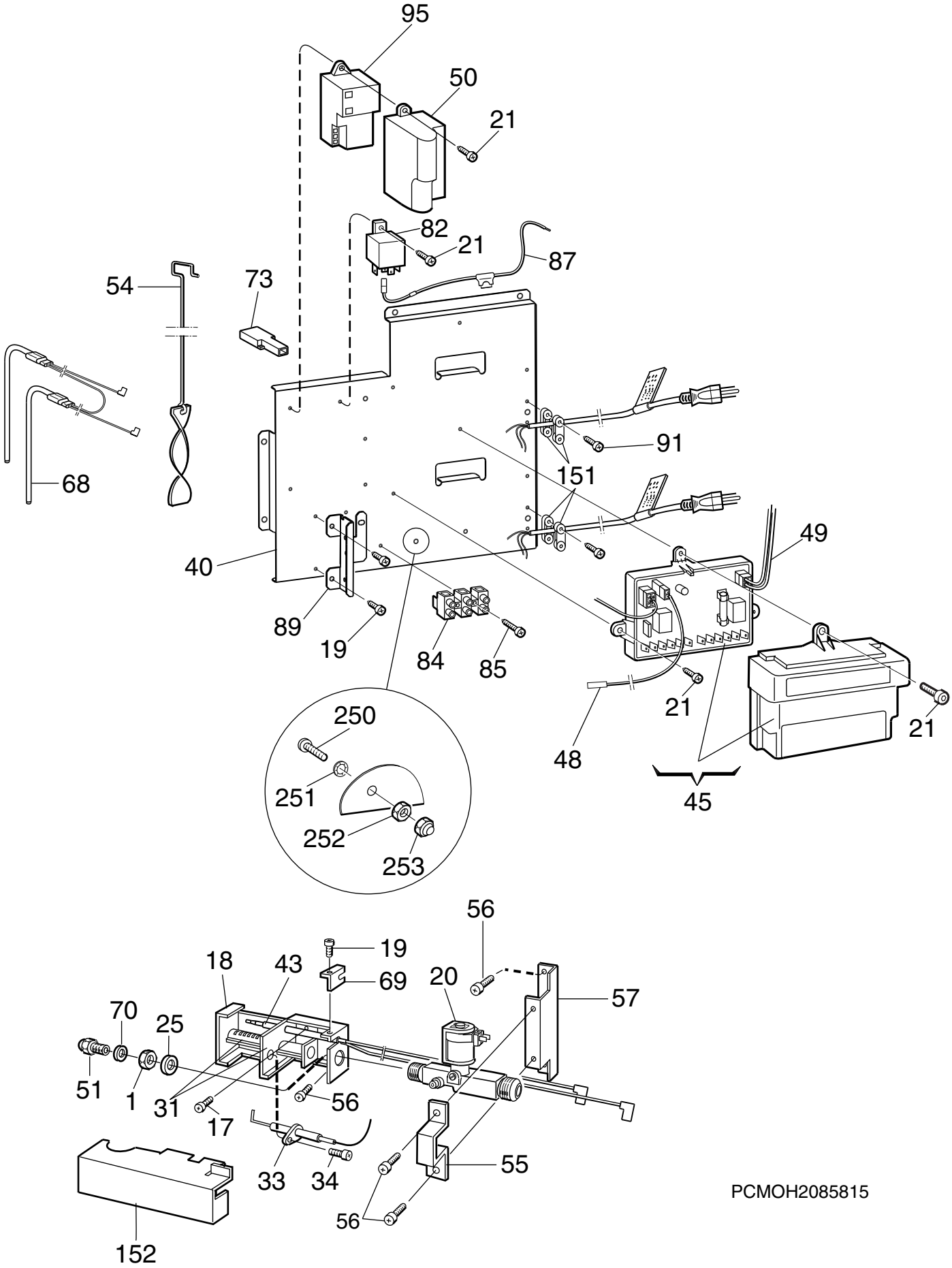
95
50
21
82
21
87
54
73
91
151
68
49
40
89
19
84
85
21
21
250
48
251
45
252
253
56
19
18
43
69
20
57
70
25
51
1
31
17
56
33
34
55
56
152
PCMOH2085815

© Dometic, LLC

Exploded view no.: PCMOH2085815
N00002098110

Matrix	PNC	ELC	ProdDate	Model
A	921148337	00	20071107	RM1350

Pos	Part No.	Matrix	Description
1	140207044	A	Nut
17	3858039039	A	Screw,zinc-plated,MRX M4X8
18	2932161017	A	Burner housing
19	3858002144	A	Screw,zinc-plated,RXS B6X9,5
20	2932615020	A	Solenoid valve
21	3858002151	A	Screw,zinc-plated,RXS B6X13
25	3858010071	A	Washer,12,5X18,5X1
31	955001672	A	Burner pipe,complete
33	2932781053	A	Electrode
34	3858002052	A	Screw,zinc-plated,RXS B6X6,5
40	3851383012	A	Bracket
43	2931826032	A	Thermocouple
45	3851005029	A	Power,module
48	3851059042	A	Conductor,thermistor
49	2954539058	A	Conductor,solenoid valve
50	2931886010	A	Cover
51	2007419332	A	Jet,nr 76
54	2932667054	A	Flame spreader
55	2932662014	A	Bracket
56	3858039047	A	Screw,zinc-plated,MRX M4X10
57	2932043017	A	Support plate
68	3850644539	A	Heater,120V, 2 x 210W
69	3851342018	A	Bracket,thermocouple
70	2007457001	A	Washer,0,5mm
73	2931963017	A	Connector,Y
82	3851334007	A	Relay
84	3858022027	A	Terminal block
85	3858002185	A	Screw,zinc-plated,RXS B6X25
87	2954553034	A	Wire,with,fuse
89	3851199012	A	Bracket,water,valve
91	3858002177	A	Screw,zinc-plated,RXS B6X19
95	2931132019	A	Spark generator
151	561014010	A	Cable clamp
152	2931401018	A	Cover
250	3858004033	A	Screw,zinc-plated,MRX M4X16
251	3858011012	A	Lock washer,zinc-plated,4,3X8
252	3858009016	A	Hexagon nut,zinc-plated,M4X3,2
253	3858028024	A	Lock nut,zinc-plated,M4

© Dometic, LLC

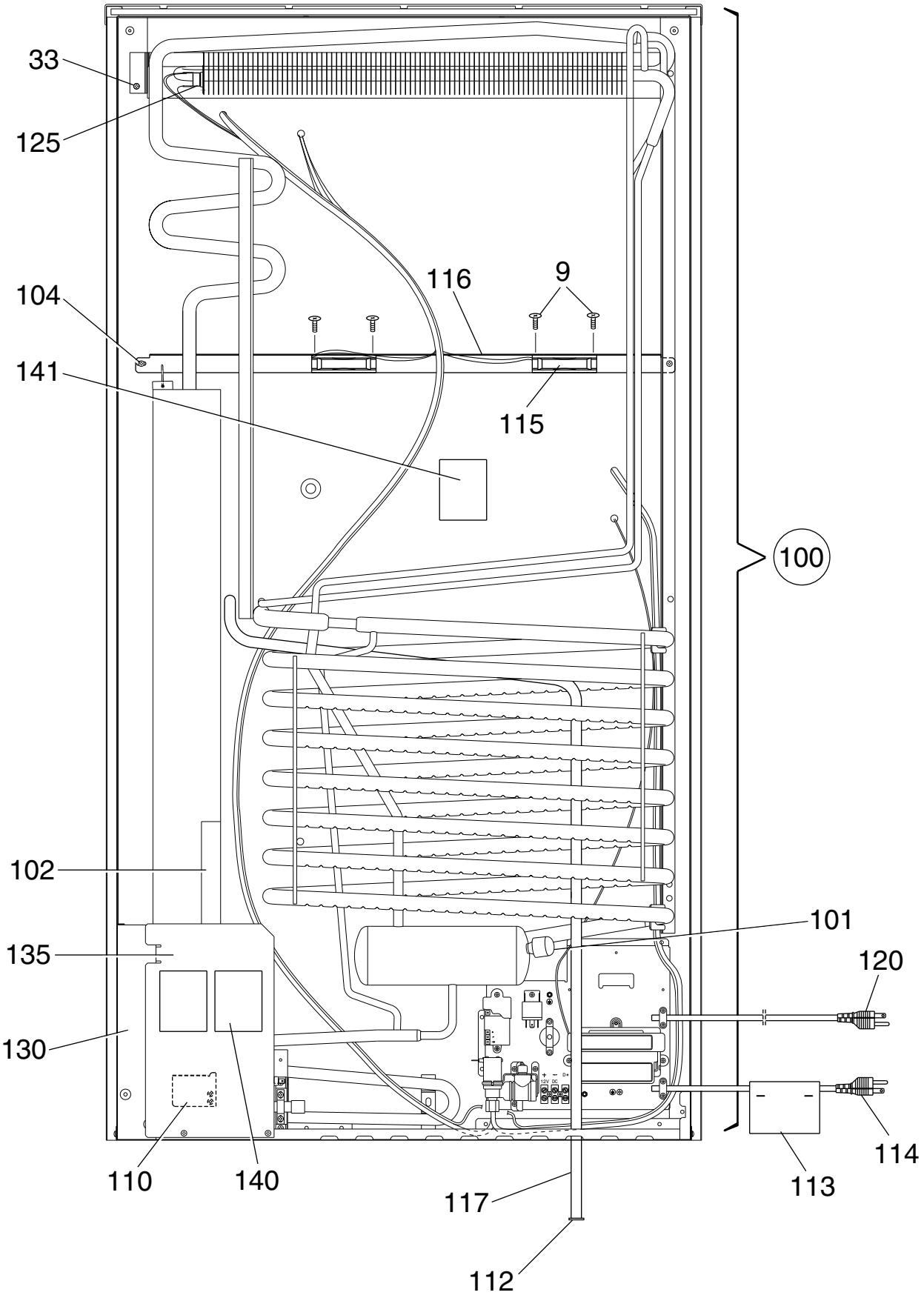

PCMOE2091376

© Dometic, LLC

Exploded view no.: PCMOE2091376
N00002098111

Matrix	PNC	ELC	ProdDate	Model
A	921148337	00	20071107	RM1350

Pos	Part No.	Matrix	Description
9	3858089018	A	Screw,black,EML 5X10
33	3858039096	A	Screw,zinc-plated,MRX M5X14
100	2934949104	A	Cooling unit,with,thermal fuse,949
101	173228008	A	Cap
102	2933557023	A	Flap
104	3858068012	A	Screw,DK 4.8X19
110	3850600010	A	Protection,blow-out
112	2932115013	A	Discharge pipe,plug
113	2932733005	A	Label
114	2002699110	A	Cord set
115	3851183016	A	Fan
116	3851390025	A	Bracket,fan
117	2932749100	A	Drainage hose,L1850
120	2002699177	A	Cord set
125	3850306063	A	Thermal fuse
130	3851204010	A	Base plate,rear
135	2932155019	A	Support plate
140	3850582002	A	Label
141	3850583000	A	Label
999	8251292002	A	User manual
			not shown

© Dometic, LLC

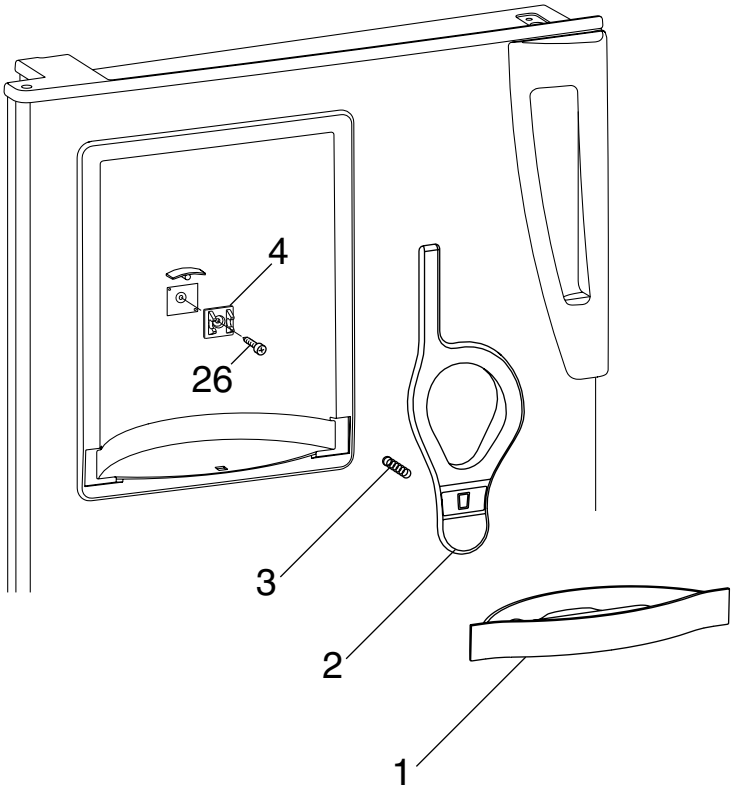

NCMO2091377

Exploded view no.: NCMO2091377
N00002098112

Matrix	PNC	ELC	ProdDate	Model
A	921148337	00	20071107	RM1350

Pos	Part No.	Matrix	Description
1	3851064018	A	Drop tray,black
2	3851063010	A	Actuator,water
3	3851065015	A	Spring
4	3851254015	A	Bracket
26	3858006046	A	Screw,PT 30x12

© Dometic, LLC

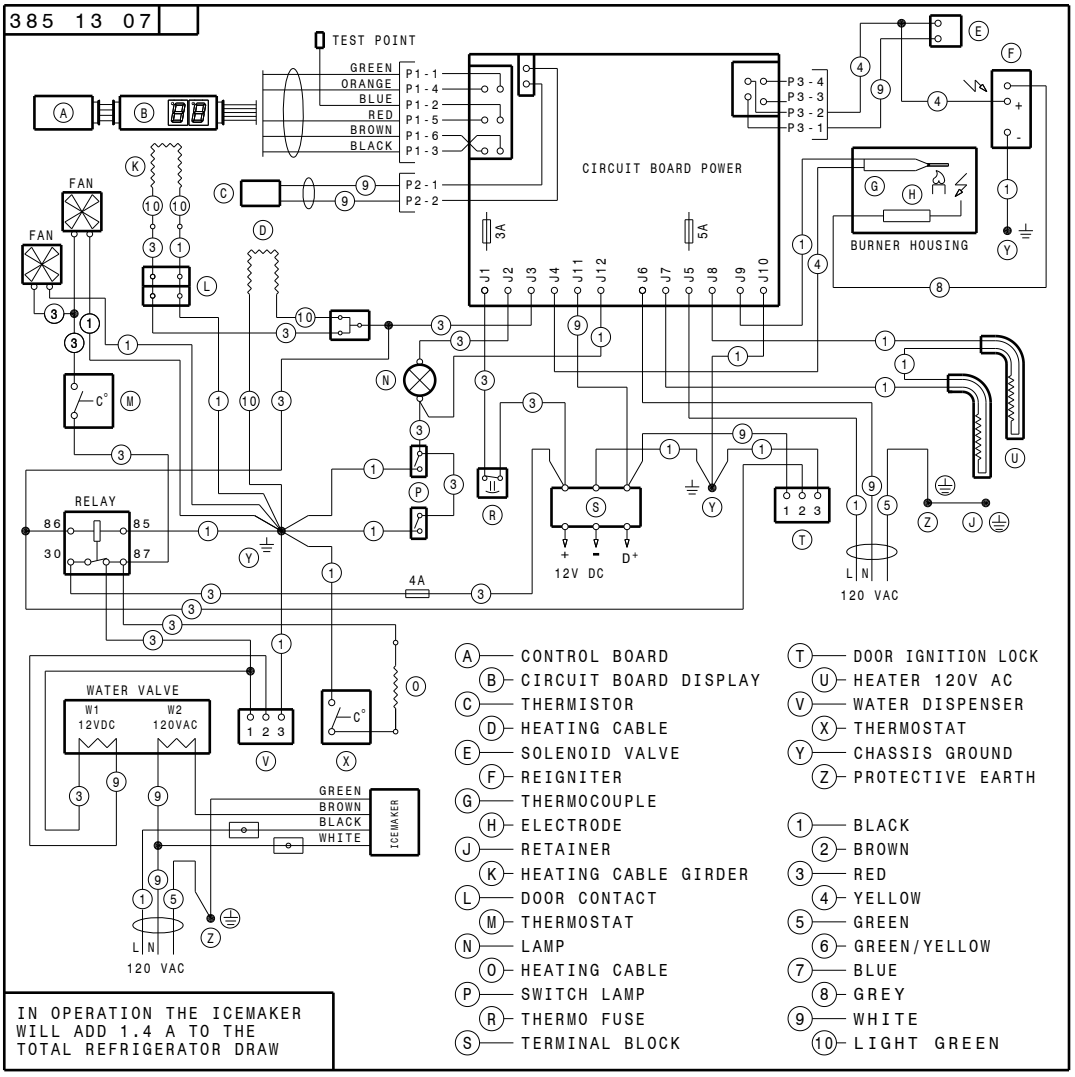
385 13 07
TEST POINT
GREEN
ORANGE
BLUE
RED
BROWN
BLACK
P1-1
P1-4
P1-2
P1-5
P1-6
P1-3
P2-1
P2-2
P3-4
P3-3
P3-2
P3-1
CIRCUIT BOARD POWER
3A
5A
J1 J2 J3 J4 J11 J12 J6 J7 J5 J8 J9 J10
FAN
FAN
BURNER HOUSING
RELAY
86
85
30
87
4A
12V DC
D+
120 VAC
L N
WATER VALVE
W1
12VDC
W2
120VAC
1 2 3
GREEN
BROWN
BLACK
WHITE
ICEMAKER
120 VAC
L N
IN OPERATION THE ICEMAKER
WILL ADD 1.4 A TO THE
TOTAL REFRIGERATOR DRAW
A CONTROL BOARD
B CIRCUIT BOARD DISPLAY
C THERMISTOR
D HEATING CABLE
E SOLENOID VALVE
F REIGNITER
G THERMOCOUPLE
H ELECTRODE
J RETAINER
K HEATING CABLE GIRDER
L DOOR CONTACT
M THERMOSTAT
N LAMP
O HEATING CABLE
P SWITCH LAMP
R THERMO FUSE
S TERMINAL BLOCK
T DOOR IGNITION LOCK
U HEATER 120V AC
V WATER DISPENSER
X THERMOSTAT
Y CHASSIS GROUND
Z PROTECTIVE EARTH
1 BLACK
2 BROWN
3 RED
4 YELLOW
5 GREEN
6 GREEN/YELLOW
7 BLUE
8 GREY
9 WHITE
10 LIGHT GREEN

N38513070