Dometic

Dometic
Spare parts list

When ordering parts, always state:
MODEL NO. - PRODUCT NO. - QUANTITY -
PART NO. – DESCRIPTION
For electric details also state:
VOLTAGE – WATTAGE
Add a 0 in front of part numbers with less than 10 digits

Recreational Vehicle Refrigerator

PNC	Voltage	Brand	Model	Door	Market
921140133	120V/ 60Hz AC	Dometic	RM2451	Left	CA - US
921140134	120V/ 60Hz AC	Dometic	RM2451	Right	CA - US

SERVICE OFFICE
USA
Dometic, LLC
2320 Industrial Parkway
Elkhart, IN 46516
574-294-2511

CANADA
Dometic, LLC
46 Zatonski, Unit3
Brantford, ON N3T 5L8
CANADA
519-720-9578

For Service Center Assistance, Call:
800-544-4881

Publication-No.
599528462
2009/04/16

© Dometic, LLC

Product specification 92114013300 RM2451

Technical features

Width	23-11/16 (Recess) in
Height	36-1/2 (Recess) in
Depth	24 (Recess) in

Heating element

Voltage	120 V/ 60Hz AC
Performance	175 W

Door stopper

Left

© Dometic, LLC

Product specification 92114013400 RM2451

Technical features

Width	23-11/16 (Recess) in
Height	36-1/2 (Recess) in
Depth	24 (Recess) in

Heating element

Voltage	120 V/ 60Hz AC
Performance	175 W

Door stopper

Right

© Dometic, LLC

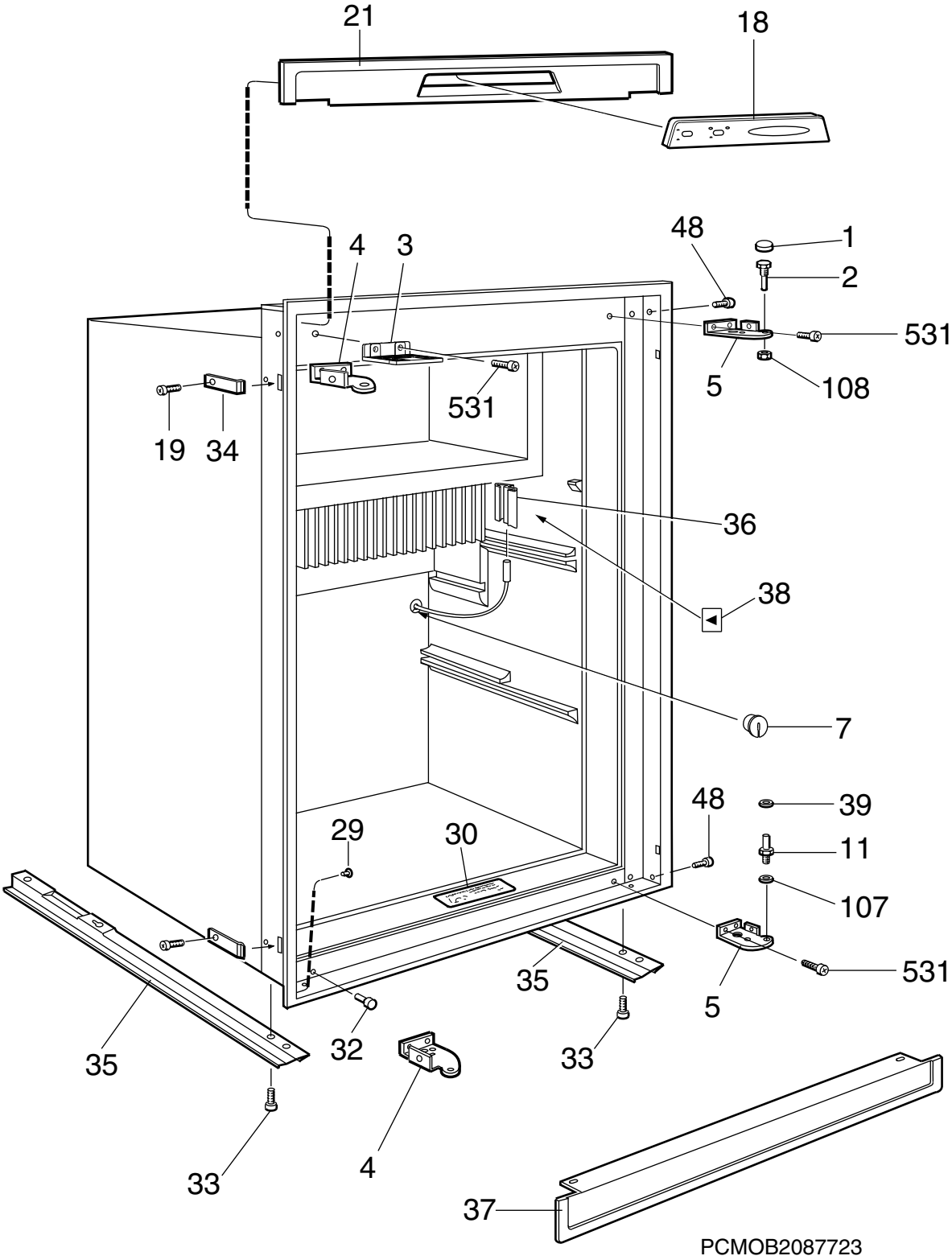
21
18
48
1
4
3
2
531
5
108
531
19
34
36
38
7
48
39
29
30
11
107
531
35
5
32
33
35
33
4
37
PCMOB2087723

© Dometic, LLC

Exploded view no.: PCMOB2087723
N00002089810

Matrix	PNC	ELC	ProdDate	Model
A	921140133	00	20061120	RM2451
B	921140134	00	20061120	RM2451

Pos	Part No.	Matrix	Description
1	2932736081	A B	Cover,black
2	2932647015	A B	Hinge pin,upper
3	3851466015	A B	Bracket,black
4	2932643048	A -	Hinge,black
5	2932643030	- B	Hinge,black
7	2002301006	A B	Cover
11	2932649011	A B	Hinge pin,lower
18	2932771021	A B	Panel,display board,black
19	3858002052	A B	Screw,zinc-plated,RXS B6X6,5
21	2932641075	A B	Front,black
29	2930740077	A B	Cover,black
30	2932776004	A B	Instruction plate
32	3850585039	A B	Plug,black
33	3858039096	A B	Screw,zinc-plated,MRX M5X14
34	2932855014	A B	Fastening bow
35	2932660018	A B	Rail
36	3851088017	A B	Bracket,thermistor
37	2932690049	A B	Base cover,black
38	2933180016	A B	Label
39	3858010022	A B	Washer,black,5,5X12X1
48	3858004058	A B	Screw,zinc-plated,MRX M4X4
107	3858010113	A B	Washer,zinc-plated,BRB 6,4X12,5
108	3858009057	A B	Nut,black,ML6 M6
531	3858039047	A B	Screw,zinc-plated,MRX M4X10
999	2932750140	A -	Door reversing kit,left-right,black not shown
999	2932750132	- B	Door reversing kit,right-left,black not shown

© Dometic, LLC

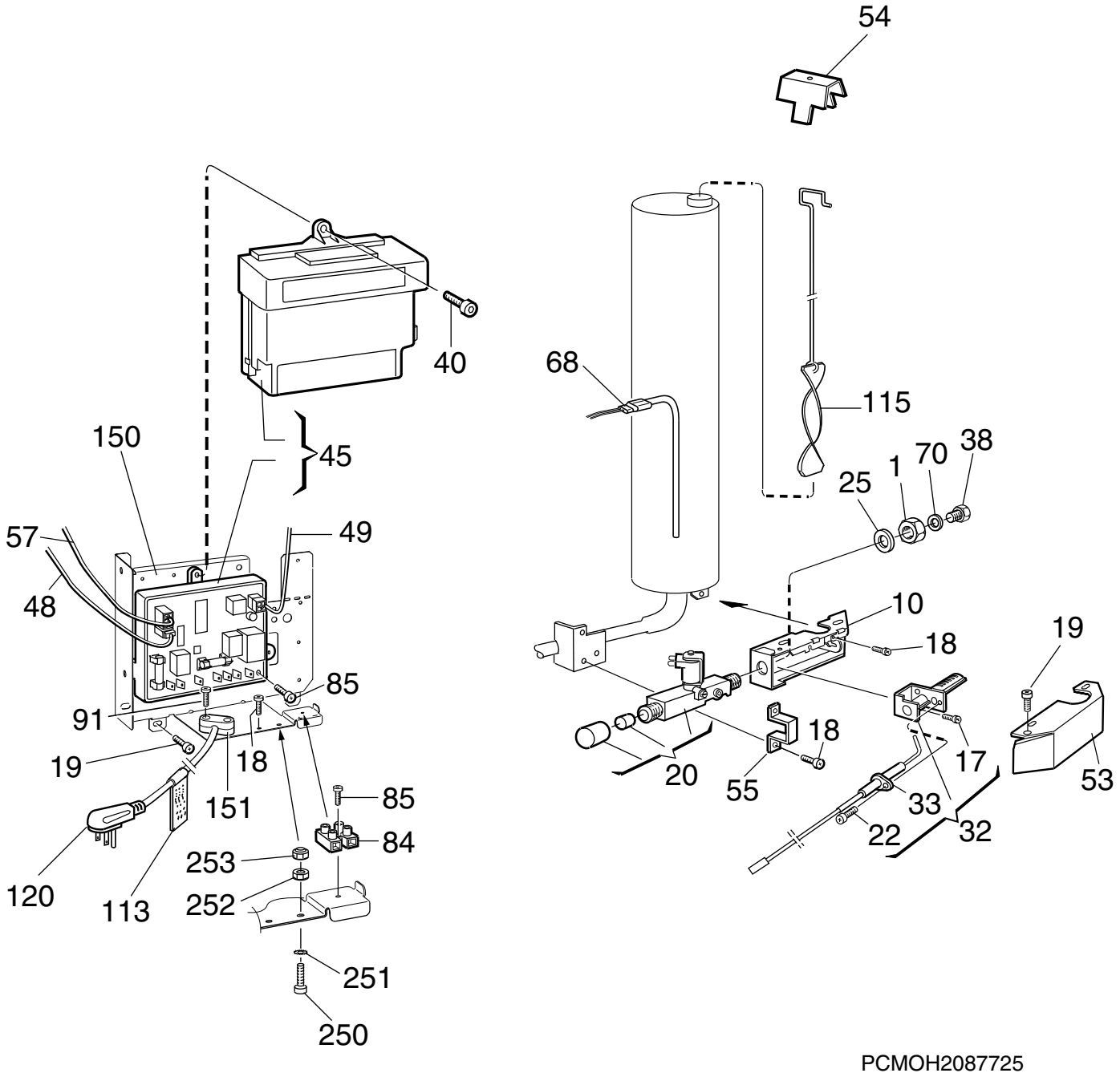
54
40
68
115
150
45
38
70
1
25
57
49
48
10
19
18
85
91
18
19
18
17
20
55
53
151
85
33
84
22
32
253
120
113
252
251
250
PCMOH2087725

© Dometic, LLC

Exploded view no.: PCMOH2087725
N00002089812

Matrix	PNC	ELC	ProdDate	Model
A	921140133	00	20061120	RM2451
B	921140134	00	20061120	RM2451

Pos	Part No.	Matrix	Description
1	140207044	A B	Nut
10	2932603018	A B	Burner housing
17	3858039039	A B	Screw,zinc-plated,MRX M4X8
18	3858039047	A B	Screw,zinc-plated,MRX M4X10
19	3858002144	A B	Screw,zinc-plated,RXS B6X9,5
20	2932615012	A B	Solenoid valve
22	3858005014	A B	Screw,zinc-plated,RXK B6X9,5
25	3858010071	A B	Washer,12,5X18,5X1
32	2930697079	A B	Burner,with,conductor
33	2932781012	A B	Electrode,with,conductor
38	2007419167	A B	Jet,43
40	3858004025	A B	Screw,MRX M4x12 < 0923...
40	3858039054	A B	Screw,MRX-TT/SW M4x12 > 0922...
45	3850712013	A B	Power,module,integrated
48	3851059034	A B	Conductor,thermistor
49	2954539041	A B	Conductor,solenoid valve
53	2932661016	A B	Cover
54	2930402009	A B	Flue top
55	2932662014	A B	Bracket
57	2954542060	A B	Conductor,PCB
68	3850644455	A B	Heater,175W, 120V
70	2007457001	A B	Washer,0,5mm
84	3858022019	A B	Terminal block
85	3858002185	A B	Screw,zinc-plated,RXS B6X25
91	3858002177	A B	Screw,zinc-plated,RXS B6X19
113	2932733005	A B	Label
115	2932667013	A B	Flame spreader
120	2002699094	A B	Cord set
150	3851474019	A B	Bracket
151	561014010	A B	Cable clamp
250	3858004033	A B	Screw,zinc-plated,MRX M4X16
251	3858011012	A B	Lock washer,zinc-plated,4,3X8
252	3858009016	A B	Hexagon nut,zinc-plated,M4X3,2
253	3858028024	A B	Lock nut,zinc-plated,M4

© Dometic, LLC

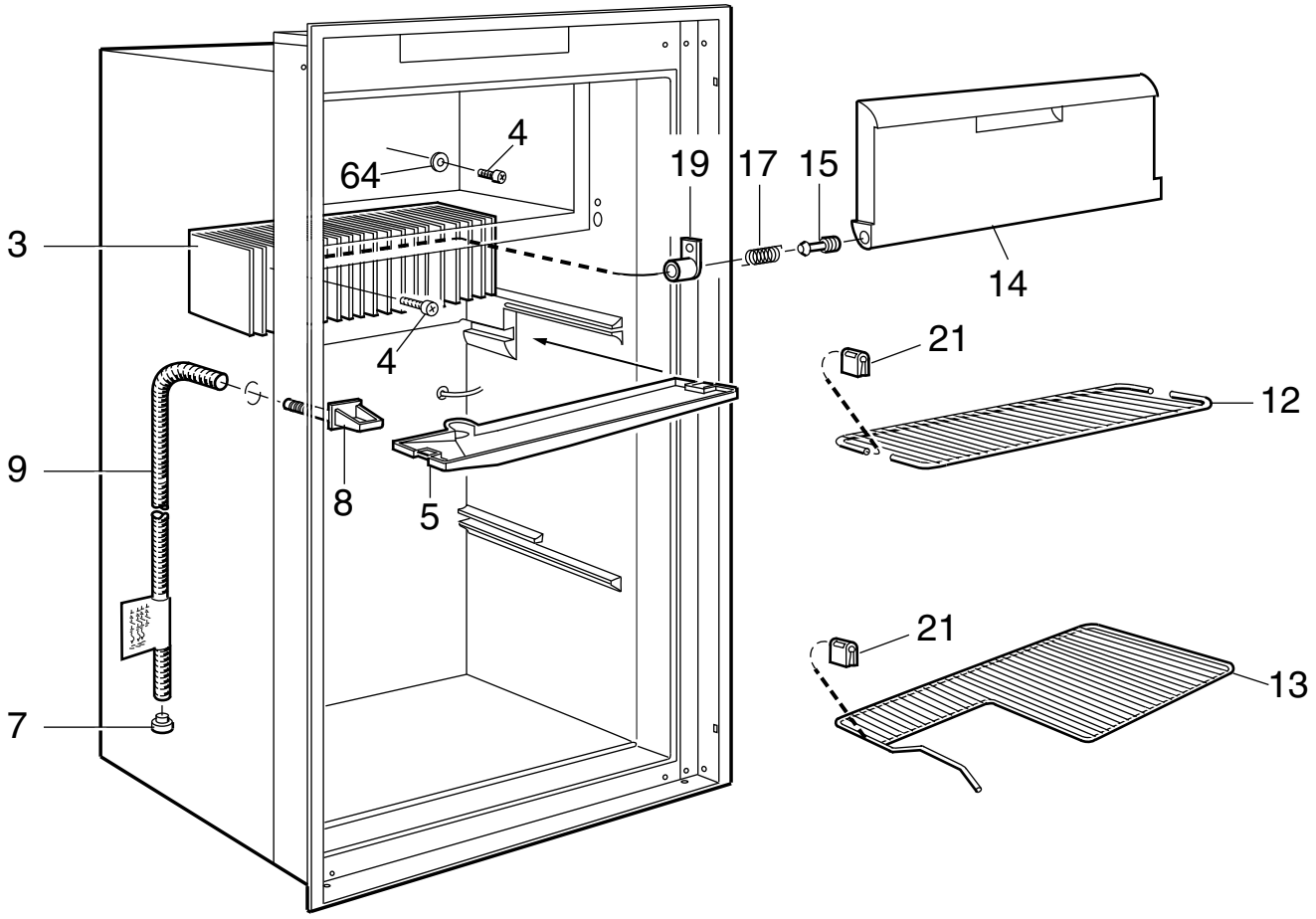

NCMOD2089813

© Dometic, LLC

Exploded view no.: NCMOD2089813
N00002089813

Matrix	PNC	ELC	ProdDate	Model
A	921140133	00	20061120	RM2451
B	921140134	00	20061120	RM2451

Pos	Part No.	Matrix	Description
3	2932628015	A B	Cooling flange
4	3858036019	A B	Screw,zinc-plated,KFXS B10X38
5	2932623016	A B	Evaporation tray
7	2932115013	A B	Discharge pipe,plug
8	2932635010	A B	Drain
9	2932749019	A B	Drain hose,L=1375mm
12	2932625060	A B	Grating shelf
13	2932626142	A B	Grating shelf
14	2932650019	A B	Flap freezer-
15	2002238000	A B	Bolt
17	2932754019	A B	Spring,left
17	2932754027	A B	Spring,right
19	2002236004	A B	Spring casing,left
19	2002236012	A B	Spring casing,right
21	2932668011	A B	Shelf lock
64	3858010147	A B	Washer,aluminium,5.2x22x1.5

© Dometic, LLC

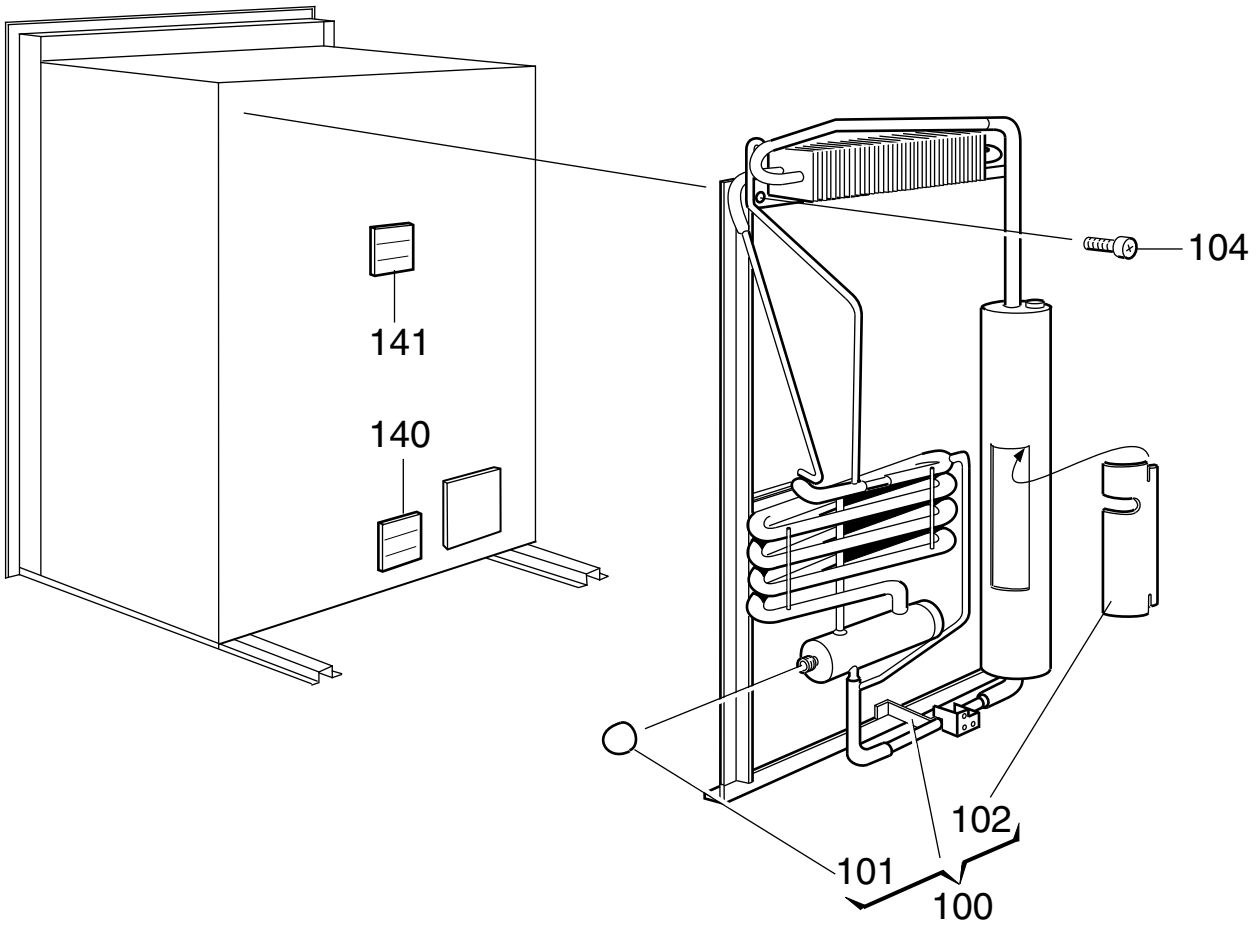

NCMOE2079590

Exploded view no.: NCMOE2079590
N00002089814

Matrix	PNC	ELC	ProdDate	Model
A	921140133	00	20061120	RM2451
B	921140134	00	20061120	RM2451

Pos	Part No.	Matrix	Description
100	2934409091	A B	Cooling unit,409
101	173228008	A B	Cap
102	2933557007	A B	Cover sheet
104	3858068012	A B	Screw,DK 4.8X19
140	3850582002	A B	Label
141	3850583000	A B	Label
999	8251293026	A B	User manual
			not shown

© Dometic, LLC

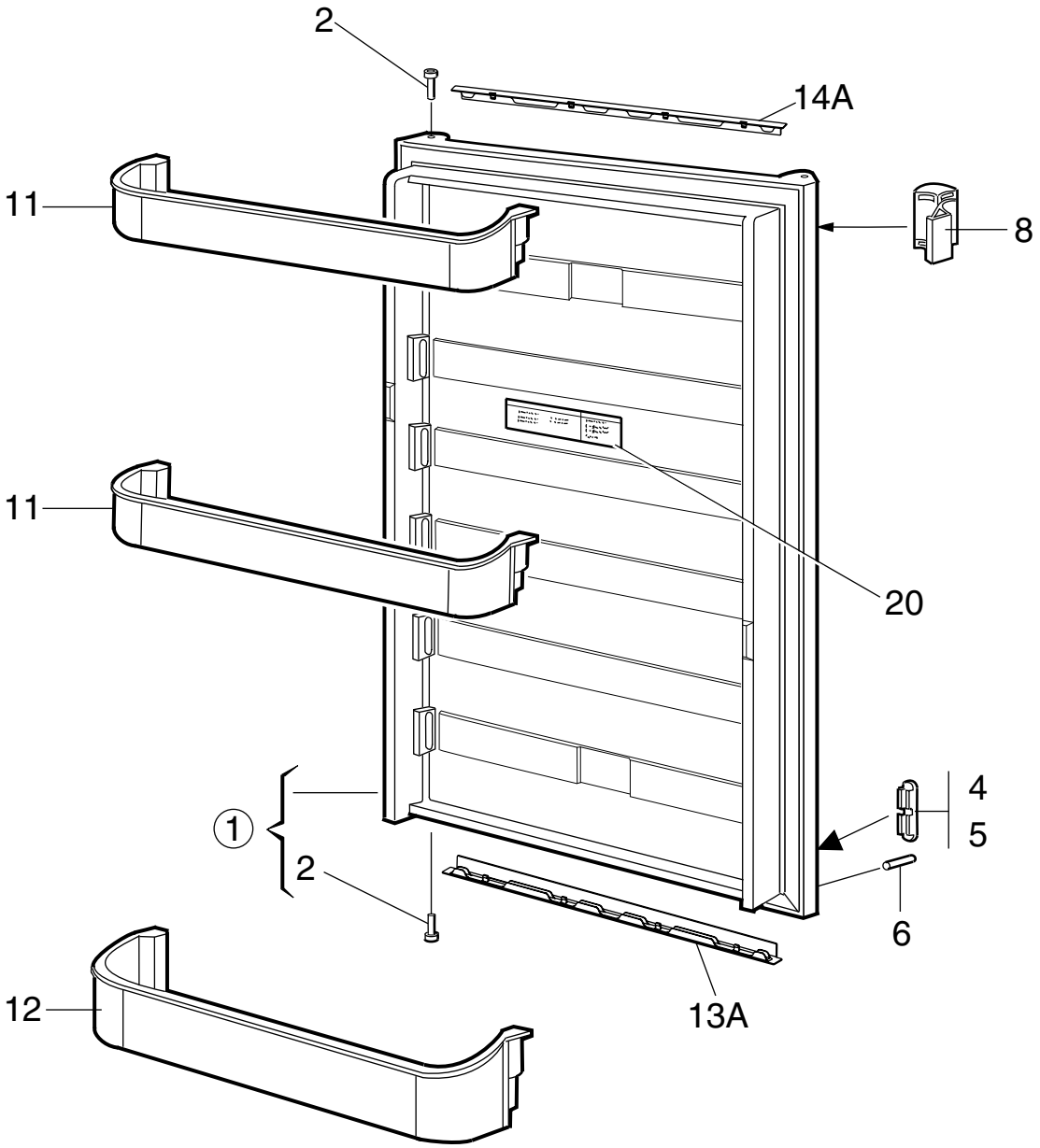

© Dometic, LLC

Exploded view no.: NCMOA2089815
N00002089815

Matrix	PNC	ELC	ProdDate	Model
A	921140133	00	20061120	RM2451
B	921140134	00	20061120	RM2451

Pos	Part No.	Matrix	Description
1	2932563139	A B	Refrigerator door,black
2	2931171066	A B	Hinge bushing,black
4	2932682038	- B	Plug,upper right,lower left
5	2932682046	A -	Plug,upper left,lower right
6	2932588011	A B	Stopper
8	2932670025	A B	Handle,black
11	2932576016	A B	Door shelf
12	2932575018	A B	Bottle shelf
13A	3850919022	A B	Decoration strip,black
14A	3850919063	A B	Decoration strip,black
20	3851235006	A B	Label

© Dometic, LLC

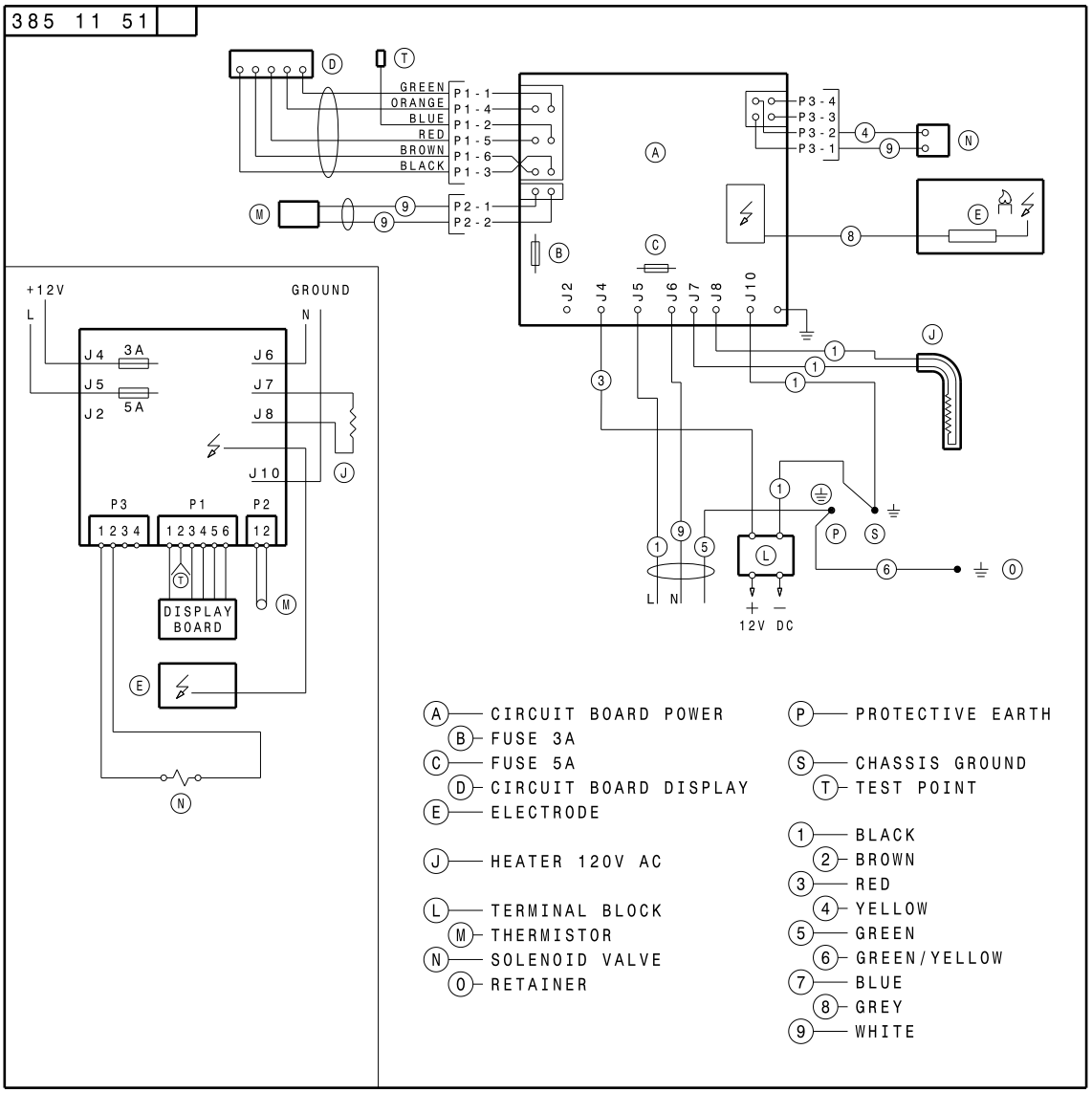
385 11 51
GREEN
ORANGE
BLUE
RED
BROWN
BLACK
P1-1
P1-4
P1-2
P1-5
P1-6
P1-3
P2-1
P2-2
P3-4
P3-3
P3-2
P3-1
J2
J4
J5
J6
J7
J8
J10
+12V
GROUND
L
N
3A
5A
P3
P1
P2
1234
123456
12
DISPLAY BOARD
12V DC
A CIRCUIT BOARD POWER
B FUSE 3A
C FUSE 5A
D CIRCUIT BOARD DISPLAY
E ELECTRODE
J HEATER 120V AC
L TERMINAL BLOCK
M THERMISTOR
N SOLENOID VALVE
0 RETAINER
P PROTECTIVE EARTH
S CHASSIS GROUND
T TEST POINT
1 BLACK
2 BROWN
3 RED
4 YELLOW
5 GREEN
6 GREEN/YELLOW
7 BLUE
8 GREY
9 WHITE

N38511510