Dometic

RECORD THIS INFORMATION FOR FUTURE REFERENCE:

Model Number _____
Serial Number _____
ADB Model Number _____
ADB Serial Number _____
Date Purchased _____

INSTALLATION & OPERATING INSTRUCTIONS

Roof Top Unit			
Description	Model	Use With Air Distribution Box	
		Model	Control
Air Conditioner	640310	3314854.000	Integral Mechanical

Read these instructions carefully. These instructions MUST stay with this product.

Form No. 3316085.000 11/14
(French 3316086.000)
©2014 Dometic Corporation
LaGrange, IN 46761

USA
SERVICE OFFICE
Dometic Corporation
2320 Industrial Parkway
Elkhart, IN 46516

CANADA
Dometic Corporation
46 Zatonski, Unit 3
Brantford, ON N3T 5L8
CANADA

SERVICE CENTER & DEALER LOCATIONS
Please Visit:
www.eDometic.com

INTRODUCTION

This air conditioner (hereinafter referred to as “unit” or “product”) is designed and intended for installation on the roof of a Recreational Vehicle (RV) during or after the time it is manufactured.
This unit can be installed by one person with brief help from additional personnel. Use these instructions to ensure a properly installed, and properly functioning product.

Dometic Corporation reserves the right to modify appearances and specifications without notice.

TABLE OF CONTENTS

INTRODUCTION 2
DOCUMENT SYMBOLS 2
IMPORTANT SAFETY INSTRUCTIONS 3
- A. Recognize Safety Information 3
- B. Understand Signal Words 3
- C. Supplemental Directives 3
- D. General Safety Messages 3

SPECIFICATIONS 4
- A. Table - Unit Data 4
- B. Roof Requirements 4

INSTALLATION INSTRUCTIONS 5
- A. Choosing Proper Location For Unit 5
- B. Roof Preparation 6
- C. Wiring Requirements 6
- D. Placing Unit On Roof 6
- E. Installing Unit 7
- F. Wiring System 9
- G. Installing ADB 9

OPERATING INSTRUCTIONS 12
- A. Controls 12
- B. "OFF" Position (⦿) 12
- C. Cooling Operation (Blue Graphic) 12
- D. Fan Operation (Black Graphic) 12
- E. Center Air Discharge 12

MAINTENANCE 13
- A. Air Filter 13
- B. ADB Housing 13
- C. Fan Motor 13

GENERAL INFORMATION 13
- A. Frost Formation On Cooling Coil 13
- B. Heat Gain 13
- C. Condensation 13

SERVICE - UNIT DOES NOT OPERATE 14

WIRING DIAGRAMS 14
- A. Unit Wiring Diagram 14
- B. ADB Wiring Diagram 14

DOCUMENT SYMBOLS

ⓘ Indicates additional information that is **NOT** related to physical injury.

☞ Indicates step-by-step instructions.

IMPORTANT SAFETY INSTRUCTIONS

This manual has safety information and instructions to help users eliminate or reduce the risk of accidents and injuries.

A. Recognize Safety Information

This is the safety alert symbol. It is used to alert you to potential physical injury hazards. Obey all safety messages that follow this symbol to avoid possible injury or death.

B. Understand Signal Words

A signal word will identify safety messages and property damage messages, and will indicate the degree or level of hazard seriousness.

WARNING indicates a hazardous situation that, if **NOT** avoided, could result in death or serious injury.

CAUTION indicates a hazardous situation that, if **NOT** avoided, could result in minor or moderate injury.

NOTICE is used to address practices **NOT** related to physical injury.

C. Supplemental Directives

Read and follow all safety information and instructions to avoid possible injury or death.

Read and understand these instructions before [installing / using / servicing / performing maintenance on] this product.

Incorrect [installation / operation / servicing / maintaining] of this product can lead to serious injury. Follow all instructions.

The installation **MUST** comply with all applicable local or national codes, including the latest edition of the following standards:

U.S.A.

- ANSI/NFPA70, National Electrical Code (NEC)
- ANSI/NFPA 1192, Recreational Vehicles Code

CANADA

- CSA C22.1, Parts I & II, Canadian Electrical Code
- CSA Z240 RV Series, Recreational Vehicles

D. General Safety Messages

WARNING Failure to obey the following warnings could result in death or serious injury:

- This product **MUST** be [installed / serviced] by a qualified service technician.
- Do **NOT** modify this product in any way. Modification can be extremely hazardous.
- Do **NOT** add any devices or accessories to this product except those specifically authorized in writing by Dometic Corporation.

SPECIFICATIONS

A. Table - Unit Data

Model No.	Nominal Capacity (BTU HR) Cooling	Electrical Rating	Compressor Rated Load Amps	Compressor Locked Rotor Amps	Fan Motor Rated Load Amps	Fan Motor Locked Rotor Amps	Refrigerant R-410A (oz)	Minimum Wire Size*	AC Circuit Protection ***Installer Supplied	Minimum Generator Size** 1 Unit / 2 Units
640310C45X	N/A	120 Vac 60 Hz 1 ph	8.8	56.0	2.6	8.5	20.5	12 AWG Copper Up to 24'	15 Amp	2.5 kW / 4.0 kW

* For wire length over 24 ft., consult the National Electrical Code for proper sizing.

** Dometic Corporation gives **GENERAL** guidelines for generator requirements. These guidelines come from experiences people have had in actual applications. When sizing the generator, the total power usage of your RV must be considered. Keep in mind generators lose power at high altitudes and from lack of maintenance.

*** CIRCUIT PROTECTION: Time Delay Fuse or Circuit Breaker Required.

B. Roof Requirements

- A 14-1/4″ x 14-1/4″ (±1/8″) square opening (hereinafter referred to as “roof opening”) is required for installing this unit. This opening is part of the return air system of the unit and **MUST** be finished in accordance with NFPA 1192.
- Roof construction with rafters/joists support frames on a minimum of 16 inch centers.
- Minimum of 1.5 inches and maximum of 6 inches distance between roof to ceiling of RV.

INSTALLATION INSTRUCTIONS

A. Choosing Proper Location For Unit

This unit is specifically designed for installation on the roof of a recreational vehicle (RV). When determining your cooling requirements, the following should be considered:

- Size of RV;
- Window area (increases heat gain);
- Amount of insulation in walls and roof;
- Geographical location where the RV will be used;
- Personal comfort level required.

1. Normal locations-The unit is designed to fit over an existing roof vent opening.
2. Other locations-When no roof vent is available or another location is desired, the following is recommended:
   a. For one unit installation: The unit should be mounted slightly forward of center (front to back) and centered from side to side.
   b. For two unit installations: Install one unit 1/3 and one unit 2/3's from front of RV and centered from side to side.

It is preferred that the unit be installed on a relatively flat and level roof section measured with the RV parked on a level surface. See table below for maximum acceptable tilt.

Model Number	Max Tilt
640310	8°

After Location Has Been Selected:

c. Check for obstructions in the area where unit will be installed. See (FIG. 1).

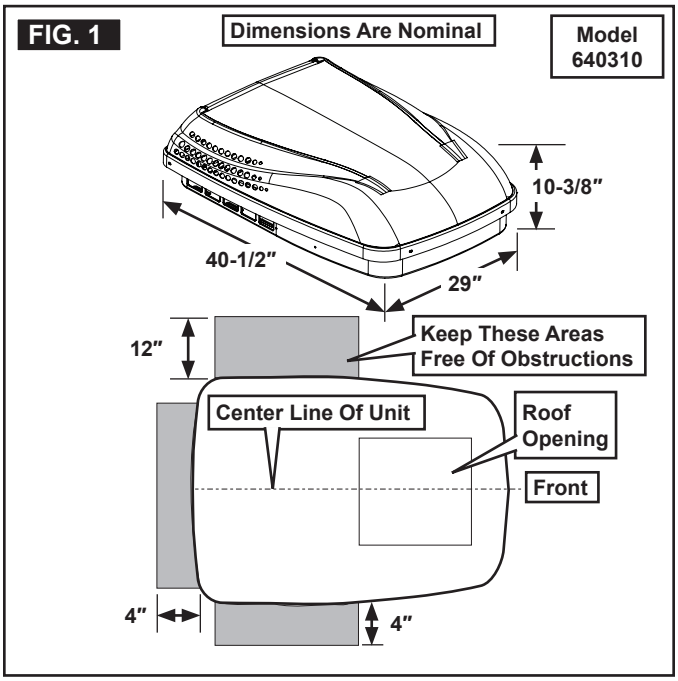

d. **NOTICE** Maintain structural integrity. Otherwise damage to product and/or RV could occur.

The roof must be designed to support 130 pounds when the RV is in motion. Normally a 200 lb. static load design will meet this requirement.

e. Check inside the RV for air distribution box (hereinafter referred to as "ADB") obstructions (i.e. door openings, room dividers, curtains, ceiling fixtures, etc.). See (FIG. 2).

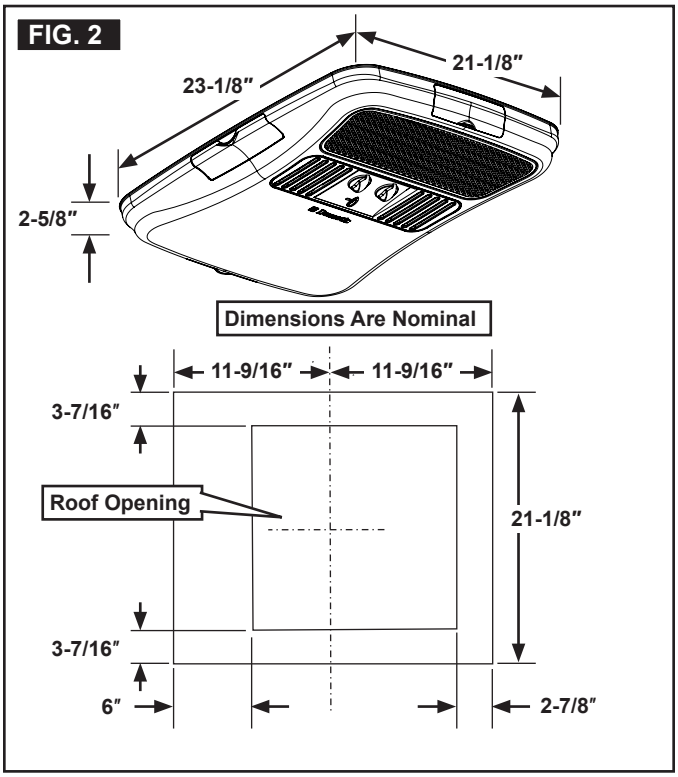

B. Roof Preparation

1. **WARNING** FIRE OR ELECTRICAL SHOCK HAZARD. Verify there are no obstacles inside RV's roof and/or walls (wires, pipes, etc.). Shut **OFF** gas supply, disconnect 120 Vac power from RV and disconnect positive (+) 12 Vdc terminal from supply battery **BEFORE** drilling or cutting into RV. Failure to obey these warnings could result in death or serious injury.

   Opening Requirements - Before preparing the ceiling opening, read all of the following instructions before beginning the installation.

   If an existing roof vent opening will **NOT** be used a roof opening **MUST** be cut through the roof and ceiling of the RV. This opening **MUST** be located between the roof reinforcing members.

2. Roof vent removal
   a. Unscrew and remove the roof vent.
   b. Remove all caulking compound around opening.
   c. Seal all screw holes and seams where the roof gasket will be located. Use a good grade of all weather sealant.
   d. If the opening exceeds 14-3/8″ x 14-3/8″, it will be necessary to resize the opening. See "B. Roof Requirements" on page (4).
   e. If the opening is less than 14-1/8″ x 14-1/8″, it must be enlarged. See "B. Roof Requirements" on page (4).
3. New opening
   a. Carefully mark and cut the required roof opening. See "B. Roof Requirements" on page (4).
   b. **NOTICE** Maintain structural integrity. Otherwise damage to product and/or RV could occur.

      NOTICE **NEVER** create a low spot on RV roof. Otherwise, water will pool and could cause a leak.

      Using the roof opening as a guide, cut the matching hole in the ceiling.

      The opening created must be framed to provide adequate support and prevent air from being drawn from the roof cavity. Framing stock 3/4″ or more in thickness must be used. Remember to provide an entrance hole for power supplies at the front of the opening. See (FIG. 3).

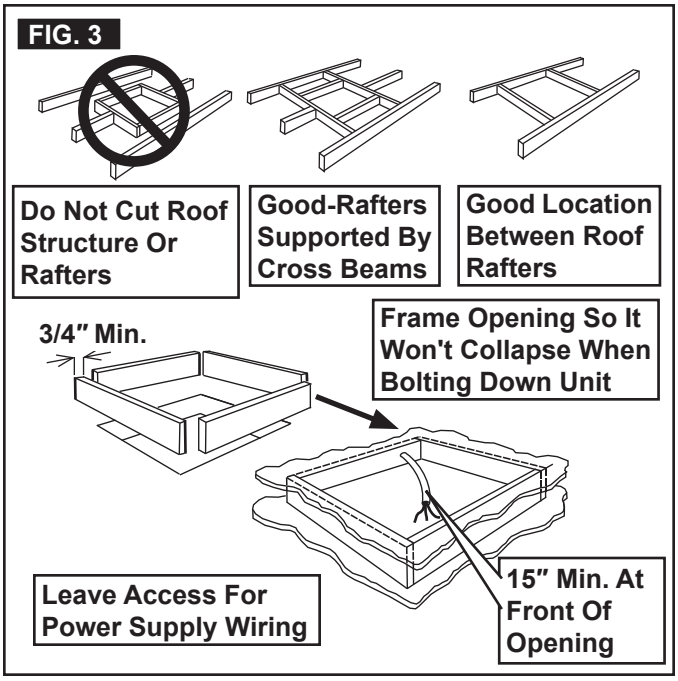

C. Wiring Requirements

1. Route a copper, with ground, 120 Vac supply wire from the time delay fuse or circuit breaker box to the roof opening. Use a listed/certified non metallic - sheathed single strand cable. See "A. Table - Unit Data" on page (4).

   If vent fan was removed, the existing wire may be used provided it is of proper type, size, location, and correctly fused.

   a. This supply wire must be located in the front portion of the roof opening.
   b. The power **MUST** be on an appropriately sized separate time delay fuse or circuit breaker. See "A. Table - Unit Data" on page (4).
   c. Make sure that at least 15″ of supply wire extends into the roof opening. This ensures an easy connection at the junction box.
   d. Protect the wire where it passes into the opening with approved method.

D. Placing Unit On Roof

1. Remove the unit from the carton and discard carton.
2. **CAUTION** LIFTING HAZARD. Use proper lifting technique and control when lifting product. Failure to obey this caution could result in injury.

   Place unit on the roof.

3. **NOTICE** Do **NOT** slide unit. Otherwise, damage to gasket (on bottom of unit) may occur, and could cause a leak.

   Lift and place the unit over the prepared opening using the gasket on the unit as a guide. See (FIG. 4).

FIG. 4

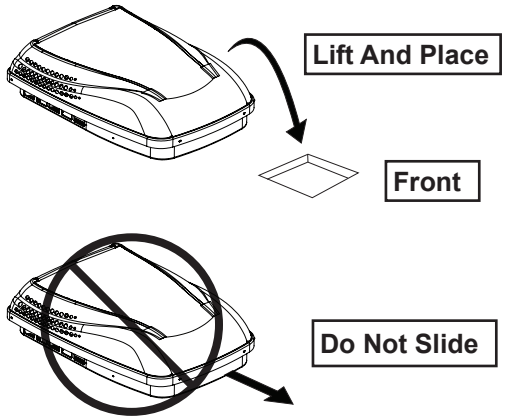

4. Place the ADB kit inside the RV. This box contains mounting hardware for the unit and will be used inside the RV.

   This completes the outside work. Minor adjustments can be done from inside the RV if required.

E. Installing Unit

1. Check gasket alignment of the unit over the roof opening and adjust if necessary. Unit may be moved from below by slightly lifting. See (FIG. 5).

FIG. 5

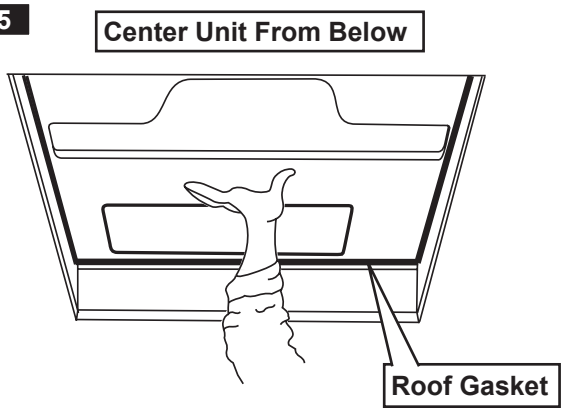

2. Remove ADB and mounting hardware from carton. See (FIG. 6).

FIG. 6

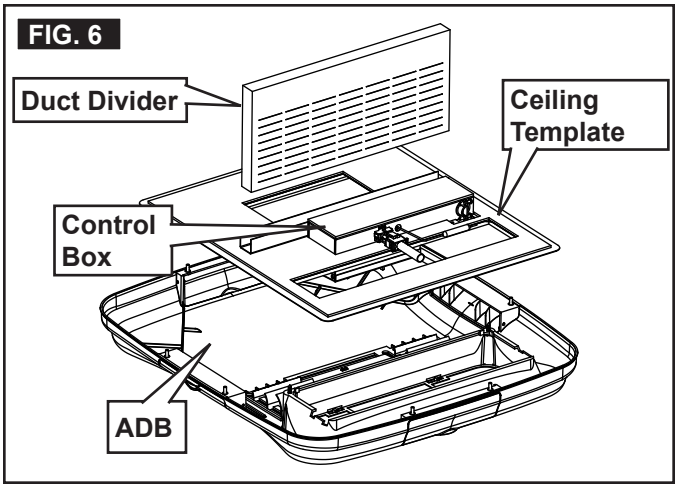

3. All models in this manual will use a four (4) bolt pattern for installing the ADB.
4. Reach up into the return air opening of the unit and pull the unit electrical cord down for later connection. See (FIG. 7).

FIG. 7

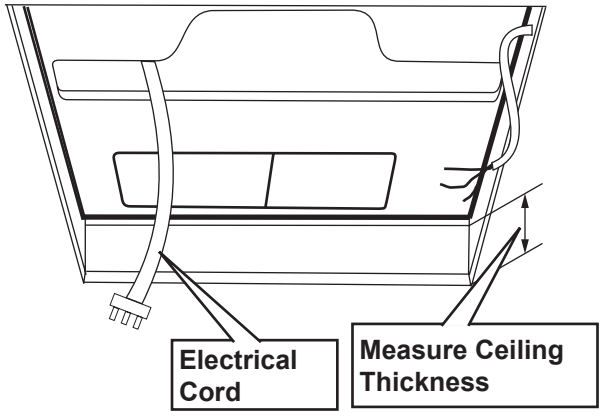

5. Duct Divider Installation
   a. Measure the ceiling thickness. See (FIG. 7).
   b. Cut away the number of rows as indicated in table below. See (FIG. 8).

Ceiling Thickness		# Of Rows To Cut	Ceiling Thickness		# Of Rows To Cut
Min.	Max.		Min.	Max.	
6.0	6.5	0	3.5	4.0	5
5.5	6.0	1	3.0	3.5	6
5.0	5.5	2	2.5	3.0	7
4.5	5.0	3	2.0	2.5	8
4.0	4.5	4	1.5	2.0	9

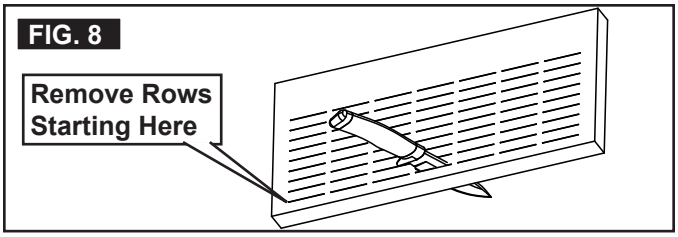

c. Carefully install the duct divider in the roof opening 5-5/8″ from back of roof opening. See (FIG. 9).

Foil back faces rear of unit.

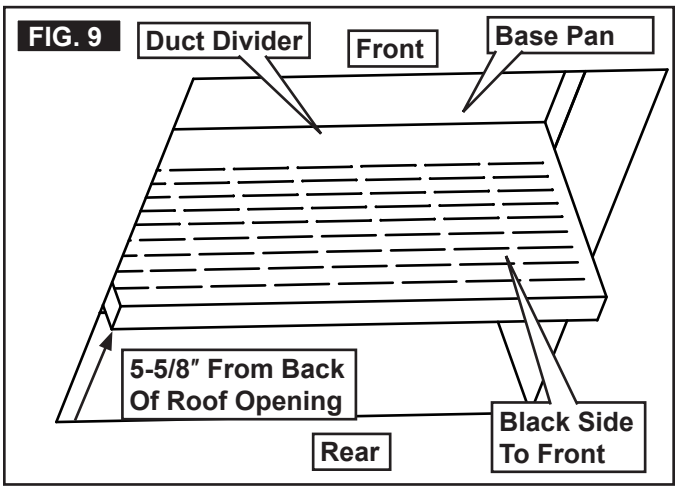

6. Ceiling Template Installation
   a. Plug the 6 pin electrical cord from the top unit into the matching 6 pin connector in the electronic control box. The plug is polarized and will only fit in one direction. See (FIG. 10).

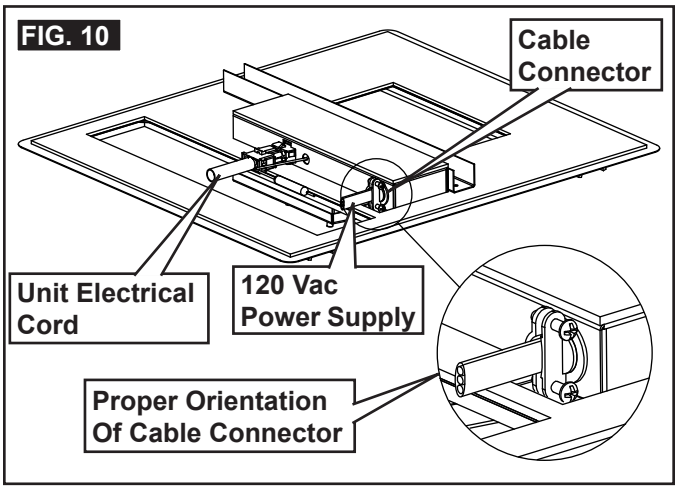

   b. Install supplied non metallic cable connector in junction box hole cutout. See (FIG. 10) for proper orientation.
   c. Route the previously run 120 Vac power supply wire through cable connector and into junction box.
   d. Secure 120 Vac power supply by tightening cable connector clamp making sure not to damage wires. See (FIG. 10).
   e. Hold the ceiling template up to the roof opening and line up the channel in the ceiling template with the previously installed duct divider. See (FIG. 11).

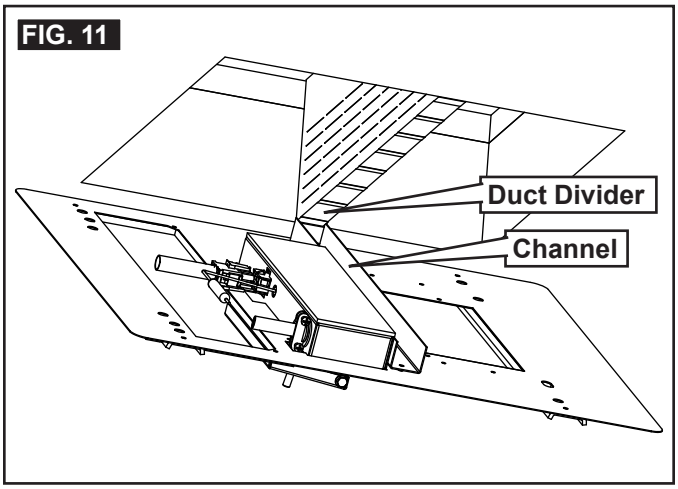

   f. Hold the ceiling template up to the roof opening and start each mounting bolt, by hand, through the ceiling template and up into the unit base pan. See (FIG. 12) & (FIG. 13).

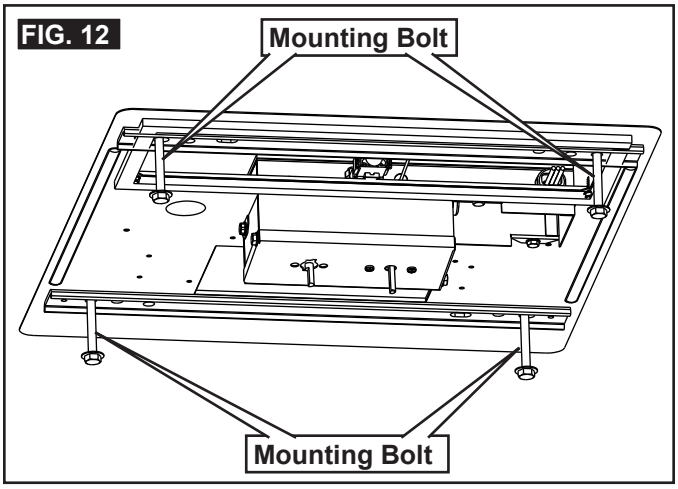

Mounting Bolt Pattern Table (See Fig. 14)	
Model	**Bolt Location**
640310	B, C, F & G

FIG. 13

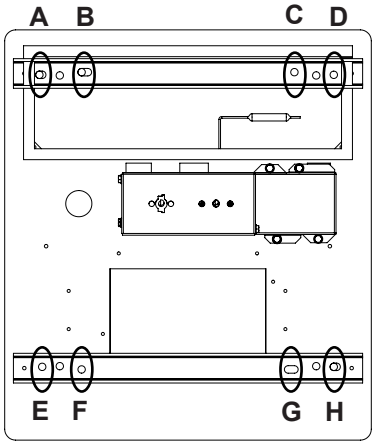

FIG. 14

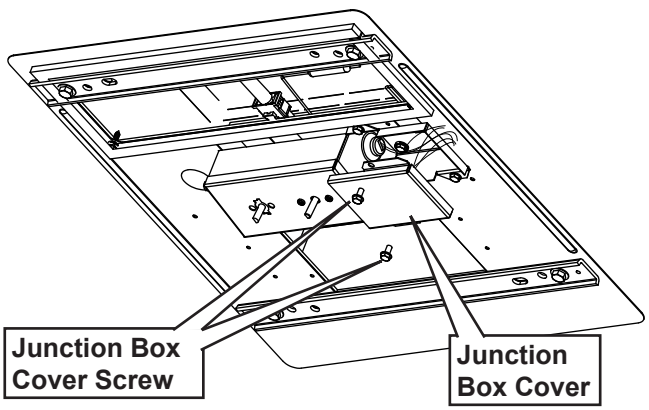

g. **NOTICE** Tighten mounting bolts to correct torque specifications. Overtightening could damage unit's base pan or ceiling template. Not enough torque will allow an inadequate roof seal, and could cause a leak.

Tighten all four (4) mounting bolts **EVENLY** within 40 to 50 inch pounds. See (FIG. 12).

F. Wiring System

1. 120 Vac Power Supply Connection

a. **WARNING** ELECTRICAL SHOCK HAZARD. Verify 120 Vac power is disconnected from RV. Failure to obey this warning could result in death or serious injury.

b. **WARNING** ELECTRICAL SHOCK HAZARD. Provide grounding in compliance with all applicable electrical codes. Failure to obey this warning could result in death or serious injury.

c. Connect white to white; black to black; using appropriate size connectors. Secure bare copper wire under grounding screw in junction box. See (FIG. 14).

d. Tape the connectors to the supply wire to assure they don't vibrate loose.

e. Push the wires into the junction box and install junction box cover. See (FIG. 14).

G. Installing ADB

1. Align ADB with ceiling template. See (FIG. 15) & (FIG. 16).

Front and rear vent doors are supplied loose. Do **NOT** install them until all screws are installed in step 2 & 3.

FIG. 15

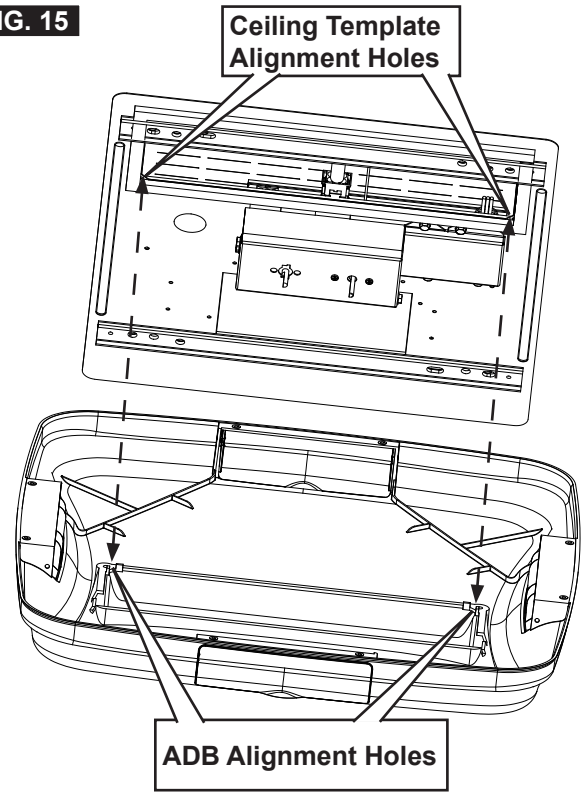

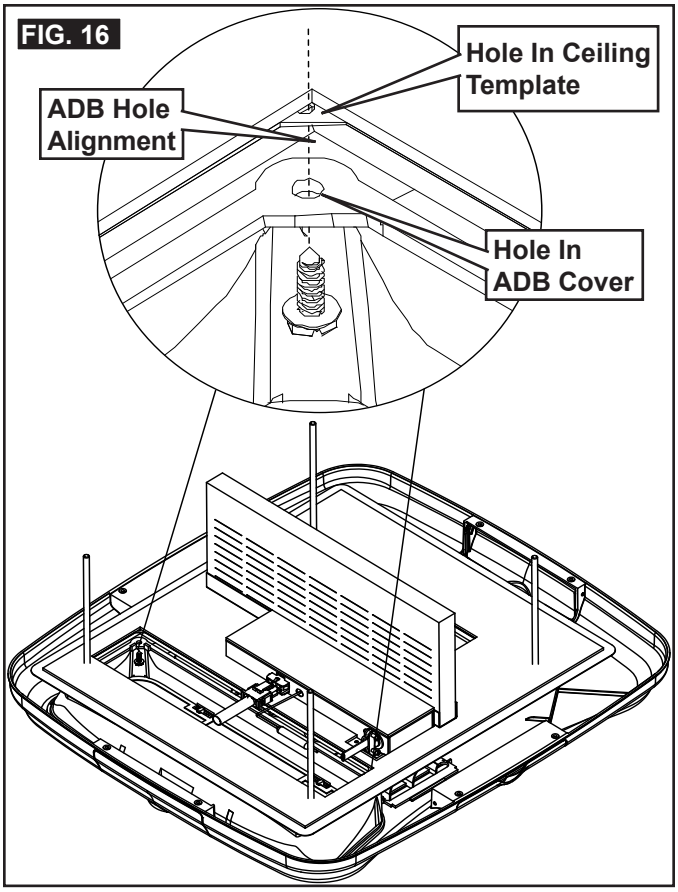

2. Install two (2) (supplied) sheet metal screws inside return air opening to secure ADB to ceiling template. See (FIG. 17).
3. Install eight (8) (supplied) wood screws inside the front, rear and side doors to secure ADB to ceiling. See (FIG. 17).

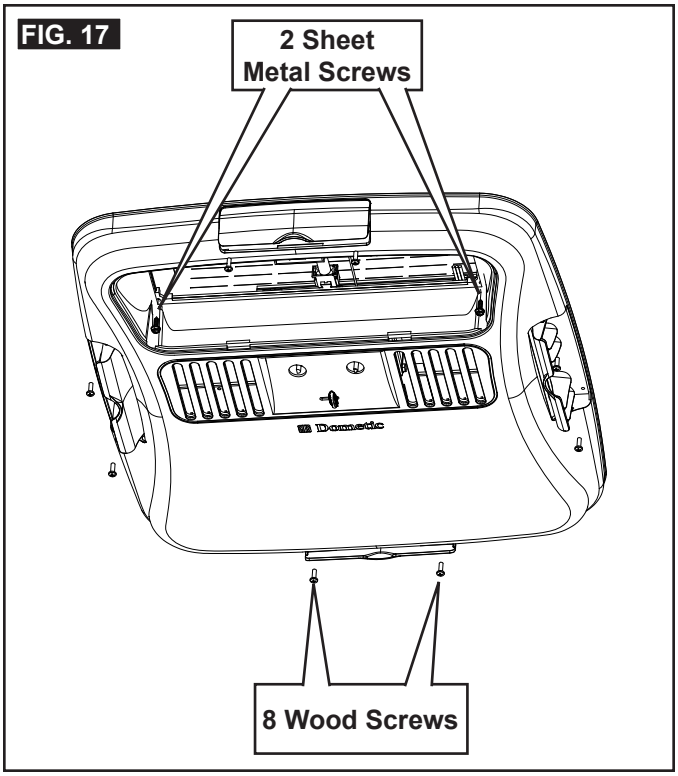

4. Install front and rear doors.
5. Place filter in return air vent grille. It may already be installed on some units. See (FIG. 18).

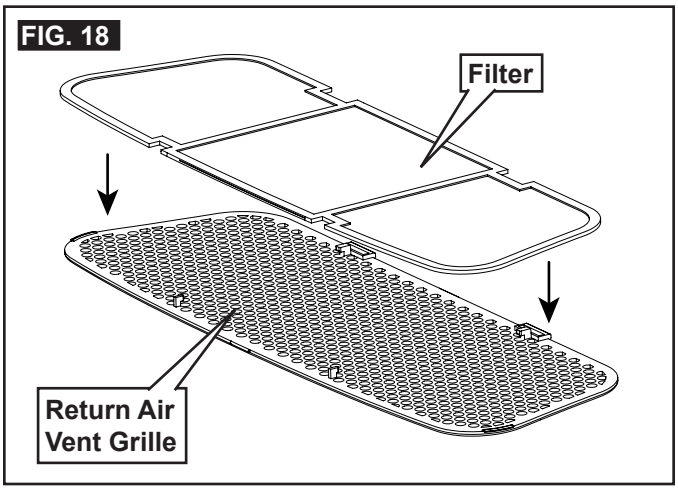

6. Install return air vent grille into the ADB. Slide return air vent grille tab into slot in ADB and rotate up and snap in place. See (FIG. 19).

FIG. 19

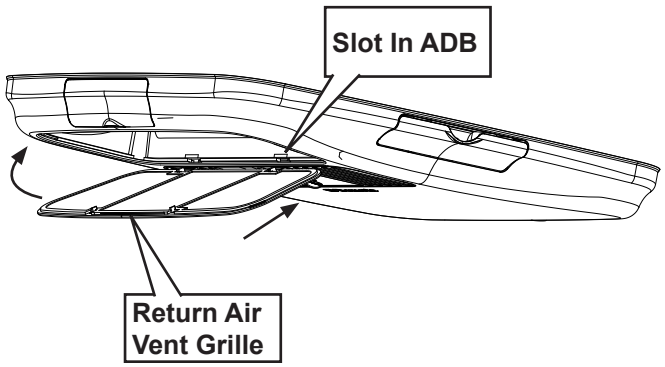

7. Install the control knobs into the ADB. See (FIG. 20).

FIG. 20

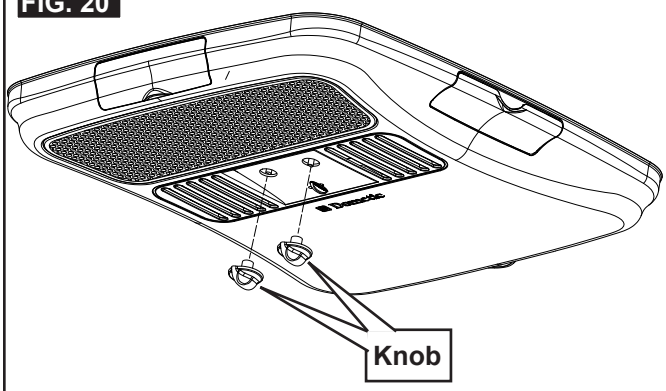

8. The unit installation is now complete and is ready for operation. The power supply to the unit may now be turned on.
9. Verify that all features of the installed system work. Please read the following operating instructions before attempting to run the unit.

OPERATING INSTRUCTIONS

A. Controls

1. The selector switch has eight positions including "OFF". It controls the fan speeds and cooling modes of operation. See (FIG. 21).

FIG. 21

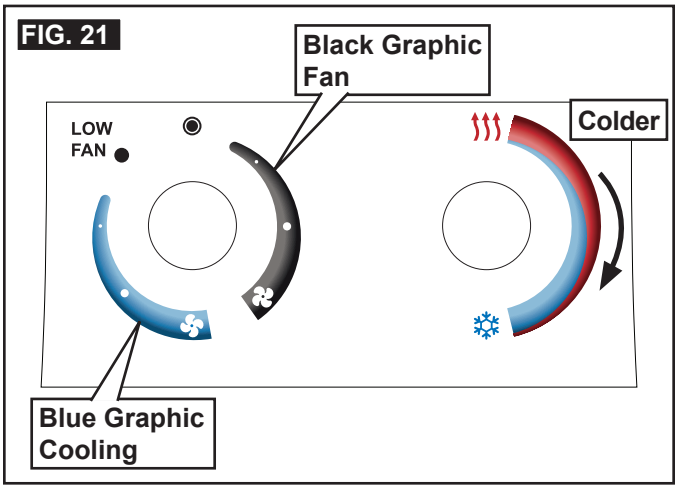

2. The thermostat controls the compressor ON/OFF operation within a temperature range of approximately 65° F and 90° F measured at the ADB inlet.

B. "OFF" Position (◉)

1. This is to turn unit off.

C. Cooling Operation (Blue Graphic)

1. Turn selector switch to cooling (blue graphic).
2. Set the thermostat at the desired temperature level.
3. Select the fan speed that best satisfies your needs:
   a. HIGH COOL: Selected when maximum cooling and dehumidification required.
   b. MEDIUM Cool: Selected when normal or average cooling required.
   c. LOW COOL: Selected when room is at desired comfort level and needs to be maintained. Normally this speed used for night time operation.

The compressor will cycle on and off as cooling is required to maintain the selected temperature level. The fan runs when the compressor is off to help keep the temperature uniform throughout the RV.

NOTICE Wait at least 2 minutes before restarting the compressor when it has been manually cycled off with either the selector switch or the temperature set lever. Otherwise, compressor will quick-cycle and could result in compressor or supply circuit overload.

D. Fan Operation (Black Graphic)

This will circulate the air in your RV without cooling or heating.

1. Turn the selector switch to fan (black graphic). There are three positions to select from (high, medium and low). See (FIG. 21).

E. Center Air Discharge

1. Slide lever to open and close. See (FIG. 22).

FIG. 22

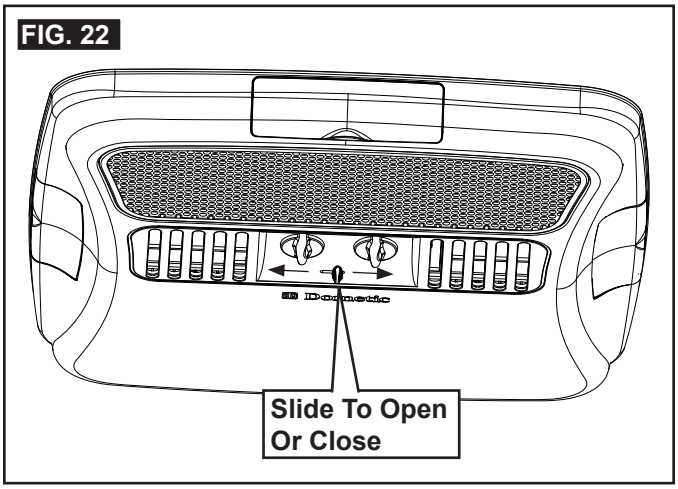

MAINTENANCE

A. Air Filter

1. Periodically (a minimum of every 2 weeks of operation) remove the return air filter located behind the return air vent grille and wash it with soap and warm water, let dry and then reinstall.

NEVER run unit without return air filter in place. This will plug the unit evaporator coil with dirt and may substantially degrade the performance of the unit over time.

B. ADB Housing

1. Clean ADB housing and control panel with a soft cloth dampened with a mild detergent. Never use furniture polish or scouring powders.

C. Fan Motor

1. The blower motor is factory lubricated and requires no service.

GENERAL INFORMATION

A. Frost Formation On Cooling Coil

1. Frost on a small portion of the coil is not unusual. Under certain conditions, ice may form on the evaporator coil. This is indicated by very cold output at very low air speed and the icing can be seen through the air inlet hole with the filter removed. If this should occur, inspect the filter and clean if dirty. Make sure air vents are open and not obstructed. Units have a greater tendency to frost when the outside temperature is relatively low. This may be prevented by adjusting the thermostat control knob to a warmer setting (counterclockwise). Should frosting continue, operate on any FAN ONLY setting until the cooling coil is free of frost; then resume normal operation. If frost condition persists, contact your local service center for assistance.

B. Heat Gain

The ability of this air conditioner to maintain the desired inside temperature depends on the heat gain of the RV.

Some preventative measures taken by the occupants of the RV can reduce the heat gain and improve the performance of the air conditioner. During extremely high outdoor temperatures, the heat gain of the vehicle may be reduced by:

1. Parking the RV in a shaded area
2. Using window shades (blinds and/or curtains)
3. Keeping windows and doors shut or minimizing usage
4. Avoiding the use of heat producing appliances

Operation on High Fan/Cooling mode will give optimum or maximum efficiency in high humidity or high outside temperatures.

Starting the air conditioner early in the morning and giving it a “head start” on the expected high outdoor ambient will greatly improve its ability to maintain the desired indoor temperature.

For a more permanent solution to high heat gain, accessories like Dometic outdoor patio and window awnings will reduce heat gain by removing the direct sun. They also add a nice area to enjoy company during the cool of the evening.

C. Condensation

The manufacturer of this unit will not be responsible for damage caused by condensation forming on ceilings, windows, or other surfaces. Air contains water vapor which condenses when temperature of a surface is below Dew point. During normal operation this unit is designed to remove a certain amount of moisture from the air, depending on the size of the space being conditioned. Keeping doors and windows closed when this air conditioner is in operation will greatly reduce the chance of condensation forming on interior surfaces.

SERVICE - UNIT DOES NOT OPERATE

If your unit fails to operate or operates improperly, check the following before calling your service center.

- If RV connected to motor generator, check to be sure motor generator is running and producing power.
- If RV connected to power supply by a land line, check to be sure line is sized properly to run unit load and it is plugged into power supply.
- Check your fuse or circuit breaker to see if it is open. Ensure fuse is not burnt, or circuit breaker is "ON" and not activated.
- After the above checks, call your local service center for further help. This unit must be serviced by qualified service personnel only.

When calling for service, always give the following:

- Unit model and serial number found on the identification label located on base pan of unit bottom. Return air vent grille must be removed from ADB to view.
- ADB model and serial number found on rating plate located on ceiling template. Observe this rating plate through the filter opening.

WIRING DIAGRAMS

A. Unit Wiring Diagram

FIG. 23

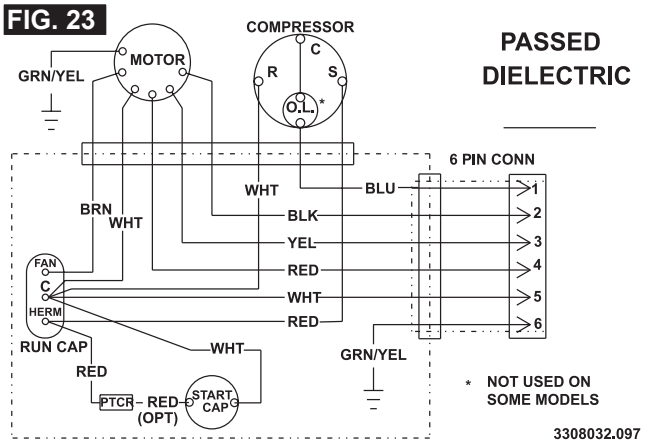

B. ADB Wiring Diagram
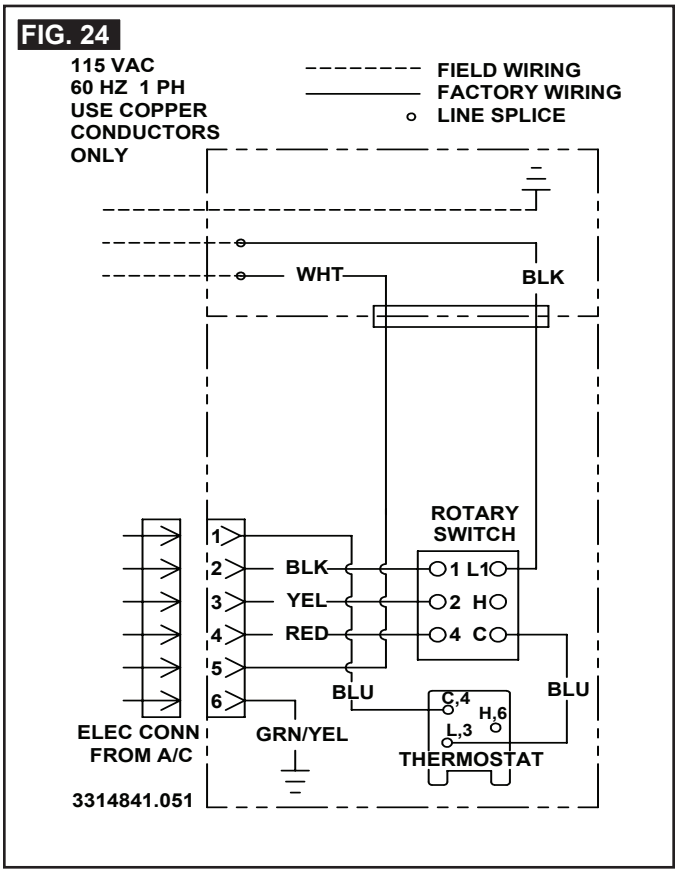
FIG. 24