Dometic

RECORD THIS INFORMATION FOR FUTURE REFERENCE:

Model Number _____
Serial Number _____
ADB Model Number _____
ADB Serial Number _____
Date Purchased _____

DuraSea Roof Top Air Conditioner

Roof Top Unit			
Description	**Model**	**Use With Air Distribution Box (not included)**	
		Model	Control
Air Conditioner	489516P	3107206.XXX	Integral Mechanical

USA
SERVICE OFFICE
Dometic, LLC
2320 Industrial Parkway
Elkhart, IN 46516
574-294-2511

CANADA
Dometic, LLC
46 Zatonski, Unit 3
Brantford, ON N3T 5L8
CANADA
519-720-9578

For Service Center Assistance Call:
800-544-4881

INSTALLATION & OPERATING INSTRUCTIONS

MODEL
489516P70X
489516P71X

3314450.000

Form No. 3314450.000 7/12
(French 3314476.000)

©2012 Dometic, LLC
LaGrange, IN 46761

Read these instructions carefully. These instructions MUST stay with this product.

INTRODUCTION

This air conditioner (hereinafter referred to as “unit,” or “product”) is designed and intended for installation on the roof of a boat during or after the time the vessel is manufactured.
This unit can be installed by one person with brief help from additional personnel. Use the following procedure to ensure a properly installed, and properly functioning product.

Dometic, LLC reserves the right to modify appearances and specifications without notice.

TABLE OF CONTENTS

INTRODUCTION 2
DOCUMENT SYMBOLS 3
IMPORTANT SAFETY INSTRUCTIONS 3
- A. Recognize Safety Information 3
- B. Understand Signal Words 3
- C. Supplemental Directives 3
- D. General Safety Messages 3

SPECIFICATIONS 4
- A. Table - Unit Data 4
- B. Roof Requirements 4

INSTALLATION PROCEDURE 5
- A. Choosing Proper Location For Unit 5
- B. Roof Preparation 5
- C. Wiring Requirements 6
- D. Placing Unit On Roof 6
- E. Installing Unit 6
- F. Wiring System 8
- G. Air Distribution Box Installation 8

OPERATING INSTRUCTIONS 10
- A. Controls 10
- B. “OFF” Position 10
- C. Cooling Operation 10
- D. Heating Operation (With Optional Electric Heater Installed) 10
- E. Fan Operation 10

MAINTENANCE 11
- A. Air Filter 11
- B. Air Distribution Box Housing 11
- C. Fan Motor 11
- D. Frost Formation On Cooling Coil 11
- E. Heat Gain 11
- F. Condensation 11

SERVICE-UNIT DOES NOT OPERATE 11
WIRING DIAGRAMS 12
- A. Unit Wiring Diagram 12
- B. Air Distribution Box Wiring Diagram 12

OWNER'S LIMITED WARRANTY 13
- A. What's Covered 13
- B. What's Not Covered 13
- C. Coverage Period 14
- D. Getting Service 14
- E. Table Of Warranty Periods 15

DOCUMENT SYMBOLS

Indicates additional information that is **NOT** related to physical injury.

Indicates step-by-step instructions.

IMPORTANT SAFETY INSTRUCTIONS

This manual has safety information and instructions to help users eliminate or reduce the risk of accidents and injuries.

A. Recognize Safety Information

This is the safety alert symbol. It is used to alert you to potential physical injury hazards. Obey all safety messages that follow this symbol to avoid possible injury or death.

B. Understand Signal Words

A signal word will identify safety messages and property damage messages, and will indicate the degree or level of hazard seriousness.

WARNING indicates a hazardous situation that, if **NOT** avoided, could result in death or serious injury.

CAUTION indicates a hazardous situation that, if **NOT** avoided, could result in minor or moderate injury.

NOTICE is used to address practices **NOT** related to physical injury.

C. Supplemental Directives

Read and follow all safety information and instructions to avoid possible injury or death.

Read and understand these instructions before [installing / using / servicing / performing maintenance] on this product.

Incorrect [installation / operation / servicing / maintaining] of this product can lead to serious injury. Follow all instructions.

The installation **MUST** comply with all applicable ABYC, local or national codes, including the latest edition of the following standards:

U.S.A.

- ANSI/NFPA70, National Electrical Code (NEC)

CANADA

- CSA C22.1, Parts I & II, Canadian Electrical Code

D. General Safety Messages

WARNING Failure to obey the following warnings could result in death or serious injury:

- This product **MUST** be [installed / serviced] by a qualified service technician.
- Do **NOT** modify this product in any way. Modification can be extremely hazardous.
- Do **NOT** add any devices or accessories to this product except those specifically authorized in writing by Dometic, LLC.

SPECIFICATIONS

A. Table - Unit Data

Model No.	Nominal Capacity (BTU HR) Cooling	Electrical Rating 120 VAC 60 Hz 1 ph	Compressor Rated Load Amps	Compressor Locked Rotor Amps	Fan Motor Rated Load Amps	Fan Motor Locked Rotor Amps	Refrigerant R-410A (Oz)	Minimum Wire Size* 12 AWG Copper Up to 24'	AC Circuit Protection ***Installer Supplied	Minimum Generator Size** 1 Unit / 2 Units
489516P70X	15,000		13.3	66.0	2.5	5.8	27.5		20 AMP	3.5 KW / 5.0 KW
489516P71X	15,000		13.3	70.0	2.5	5.8	27.5		20 AMP	3.5 KW / 5.0 KW

* For wire length over 24 ft., consult the National Electrical Code for proper sizing.

** Dometic Marine gives **GENERAL** guidelines for generator requirements. To reduce start-up power draw by up to 65%, consider installing a Dometic SmartStart.

*** CIRCUIT PROTECTION: Time Delay Fuse or Circuit Breaker Required.

B. Roof Requirements

- A 14-1/4″ x 14-1/4″ (±1/8″) square opening (hereinafter referred to as “roof opening”) is required for installing this unit. This opening is part of the return air system of the unit and must be finished in accordance with NFPA 1192.
- If applicable: Roof construction with rafters/joists support frames on a minimum of 16 inch centers.
- Minimum of 1 inch and maximum of 4 inches distance between roof to ceiling.

INSTALLATION PROCEDURE

A. Choosing Proper Location For Unit

This unit is specifically designed for installation on the roof of a boat. Mount only with front of unit facing the bow (the vented end should face aft). See (FIG. 4).

When determining your cooling requirements, the following should be considered:

- Size of boat;
- Window area (increases heat gain);
- Amount of insulation in walls and roof;
- Geographical location where boat will be used;
- Personal comfort level required.

It is preferred that the unit be installed on a relatively flat and level roof section, but up to a 15° tilt is acceptable.

1. After Location Has Been Selected:
   a. Check for obstructions in the area where unit will be installed. See (FIG. 1).

FIG. 1

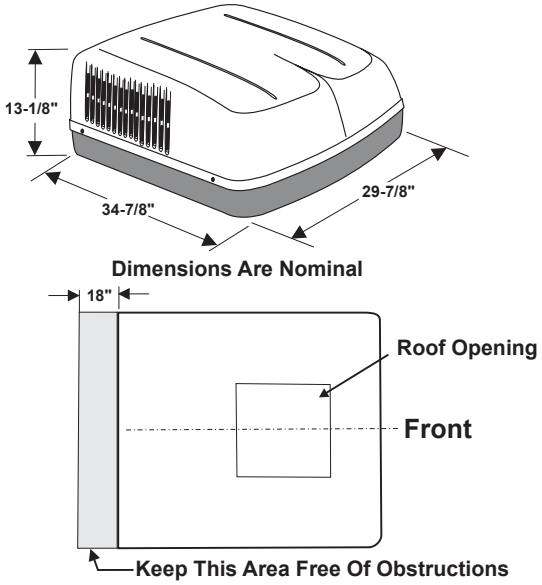

   b. **NOTICE** Maintain structural integrity. Otherwise damage to product and/or boat could occur.

      The roof must be designed to support 130 pounds when the boat is in motion. Normally a 200 lb. static load design will meet this requirement.

   c. Check inside the boat's cabin for air distribution box obstructions (i.e. space for doors to open, room dividers, curtains, ceiling fixtures, etc.) See (FIG. 2).

FIG. 2

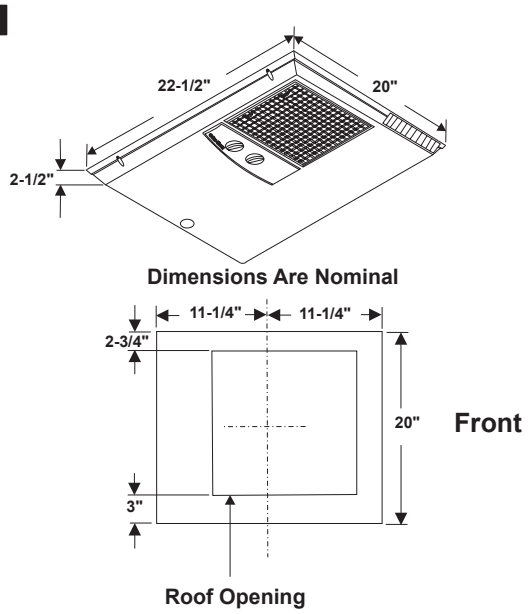

B. Roof Preparation

1. **WARNING** FIRE OR ELECTRICAL SHOCK HAZARD. Verify there are no obstacles inside boat roof and/or walls (wires, pipes, etc.). Shut **OFF** gas supply, disconnect 120 Vac power from boat, and disconnect positive (+) 12 Vdc terminal from supply battery **BEFORE** drilling or cutting into boat. Failure to obey these warnings could result in death or serious injury.
2. Carefully mark and cut the required roof opening. See section, "B. Roof Requirements" on page (4).
3. Using the roof opening as a guide, cut the matching hole in the ceiling.
4. **NOTICE** Maintain structural integrity. Otherwise damage to product and/or boat could occur.

   NOTICE **NEVER** create a low spot on boat roof. Otherwise, water will pool and could cause a leak.

   The opening created must be framed to provide adequate support and prevent air from being drawn from the roof cavity. Framing stock 3/4″or more in thickness must be used. Remember to provide an entrance hole for power supplies at the front of the opening. See (FIG. 3).

FIG. 3

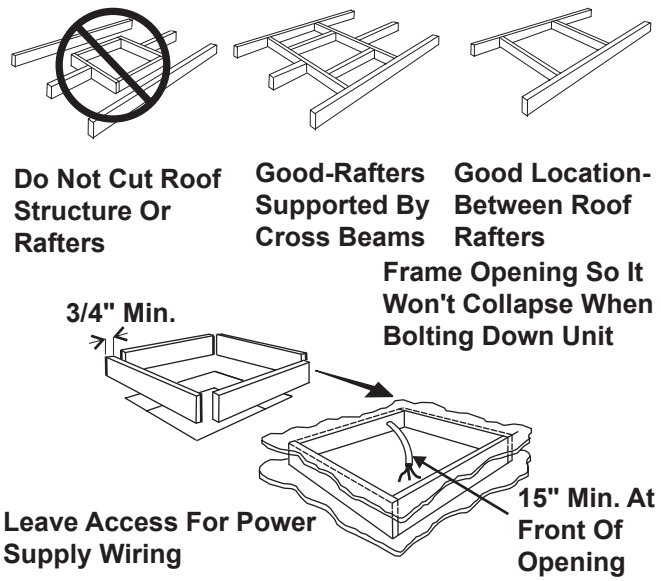

C. Wiring Requirements

1. Route a copper, with ground, 120 Vac supply wire from the time delay fuse or circuit breaker box to the roof opening. The proper size wire can be determined from chart on page 4.
   a. This supply wire must be located in the front portion of the roof opening.
   b. The power **MUST** be on an appropriately sized separate time delay fuse or circuit breaker. The proper size protection can be determined from the chart on page 4.
   c. Make sure at least 15″ of supply wire extends into the roof opening. This insures an easy connection at the junction box.
   d. Protect the wire where it passes into the opening with approved method.

D. Placing Unit On Roof

1. Remove the unit from the carton and discard carton.
2. **⚠ CAUTION** LIFTING HAZARD. Use proper lifting technique and control when lifting product. Failure to obey this caution could result in injury.

   Place the unit on the roof.
3. ***NOTICE*** Do **NOT** slide unit. Otherwise, damage to gasket (on bottom of unit) may occur, and could cause a leak.

   Lift and place the unit over the prepared opening using the gasket on the unit as a guide. See (FIG. 4).

FIG. 4

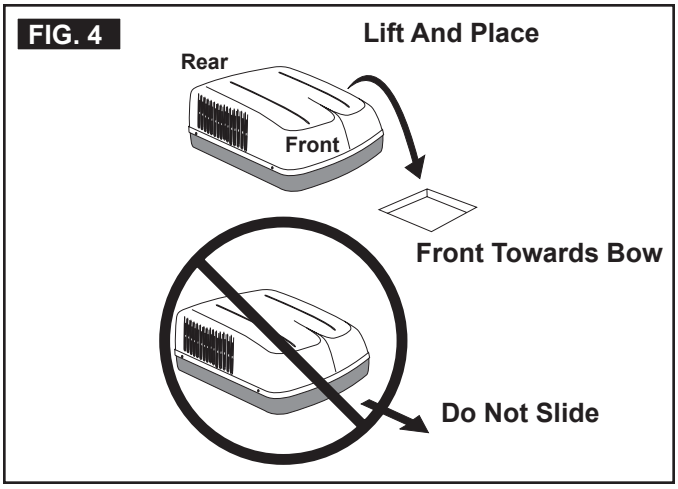

4. Place the air distribution box kit (ordered separately) inside the boat. This box contains mounting hardware for the unit and will be used inside the boat.

   This completes the outside work. Minor adjustments can be done from inside the boat if required.

E. Installing Unit

1. Remove air distribution box and mounting hardware from carton. The upper duct is shipped inside the lower duct which is part of the ceiling template.
2. Check for correct alignment and adjust the unit as necessary (roof gasket centers over the roof opening). See (FIG. 5).

FIG. 5

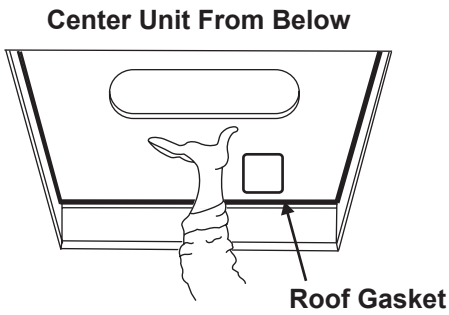

3. All models listed in this manual will use a four (4) bolt pattern for installing the air distribution box kit.

4. Remove upper duct from ceiling template and locate it over blower discharge.

   Edges **WITHOUT** flanges install toward **REAR** and **SIDE** of opening. See (FIG. 6).

FIG. 6

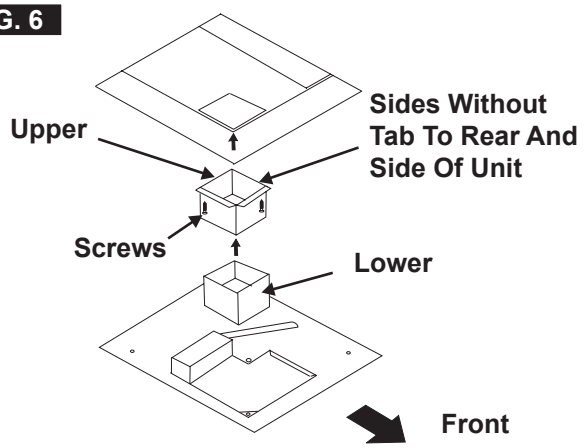

5. Use two (2) #10 x 10 mm screws to hold duct to base pan. Screw holes are provided in bottom of base pan for these screws.
6. Reach up into return air opening of the unit and pull the unit electrical cord down for later connection. See(FIG. 7).
7. If your installation includes the optional electric heat kit, install it at this time. Follow the instructions with the heat package for its installation procedure.

FIG. 7

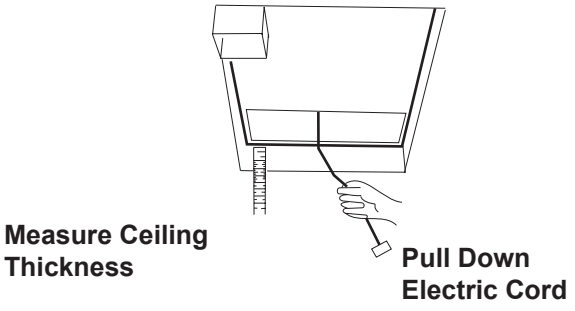

8. Measure the ceiling to roof thickness:
   a. If distance is 1″ - 2″, remove perforated tabs from both upper and lower ducts. See (FIG. 7) & (FIG. 8).

FIG. 8

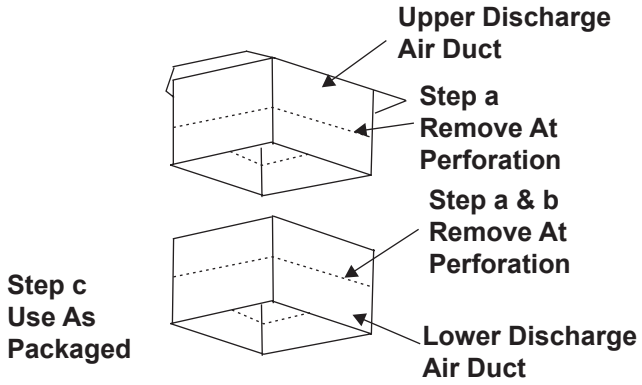

   b. If distance is 2″ - 3″, remove perforated tabs from bottom duct only. See (FIG. 8).
   c. If distance is 3″ - 4″, install ducts as received. See (FIG. 8).
   d. If distance is 4″ - 6″, use optional duct adapter, part number 3106775.004 and bolt kit, part number 3100895.006
9. Install ceiling template by sliding lower duct over upper duct.
10. Hold the ceiling template up to the roof opening.
    a. Start each mounting bolt through the ceiling template and up into the base pan by hand. See (FIG. 9).

FIG. 9

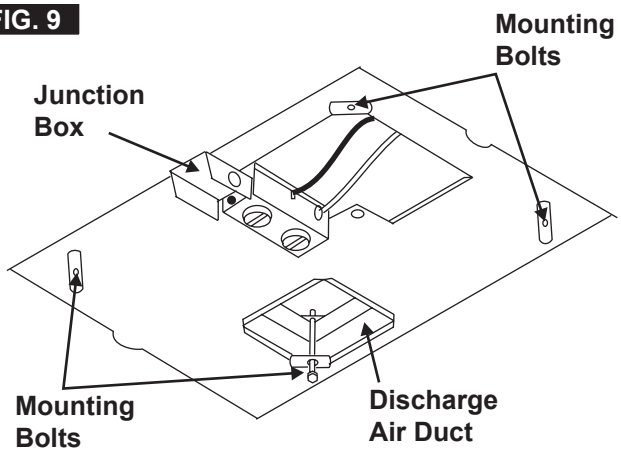

    b. Tighten all 4 bolts until they touch the template but are not tight.
    c. With the ceiling template flat against the ceiling install the 6 wood screws (installer supplied) at an angle, so as to stretch and flatten the template. Three (3) across the front and three (3) across the back of the template. See (FIG. 10).

FIG. 10

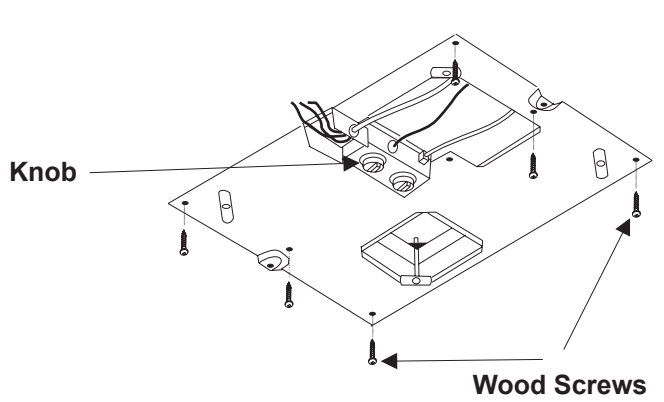

FIG. 11

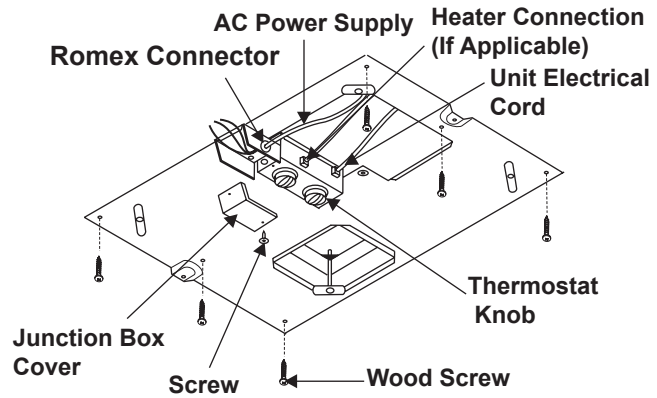

d. **NOTICE** Tighten mounting bolts to correct torque specifications. Overtightening could damage unit's base pan or ceiling template. Not enough torque will allow an inadequate roof seal, and could cause a leak.

Tighten all four (4) mounting bolts **EVENLY** within 40 to 50 inch pounds. See (FIG. 9).

This will compress the roof gasket to approximately 1/2″.

F. Wiring System

1. 120 Vac Power Supply Connection

a. **WARNING** ELECTRICAL SHOCK HAZARD. Verify 120 Vac power is disconnected from boat. Failure to obey this warning could result in death or serious injury.

b. **WARNING** ELECTRICAL SHOCK HAZARD. Provide grounding in compliance with all applicable electrical codes. Failure to obey this warning could result in death or serious injury.

c. Install Romex connector in junction box. See (FIG. 11).

d. Route the previously run 120 Vac power supply wire through Romex connector and into the junction box. Six inch leads are sufficient for connection to unit wires and ground screw. Tighten connector making sure not to damage wires. See (FIG. 11).

e. Connect white to white; black to black using approved connectors. Connect the bare copper wire to the ground screw located in the junction box.

f. Push the wires into the junction box and install junction box cover.

g. Plug unit electrical cord into the mating connector on the control box.

h. Plug heater cord (if applicable) into mating connector in the control box.

G. Air Distribution Box Installation

1. Remove return air grille from air distribution box by pulling in on half round finger catches. See (FIG. 12).

FIG. 12

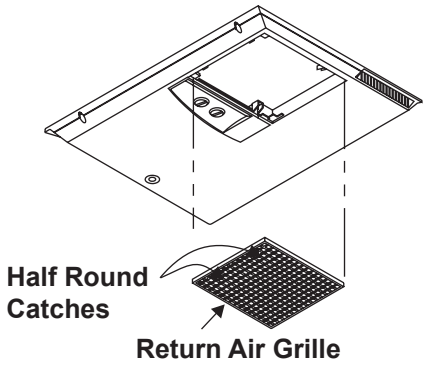

2. Hold air distribution box up to ceiling template and install three (3) #10 x 3/8″ screws at air distribution box mounting point. See (FIG. 13).

FIG. 13

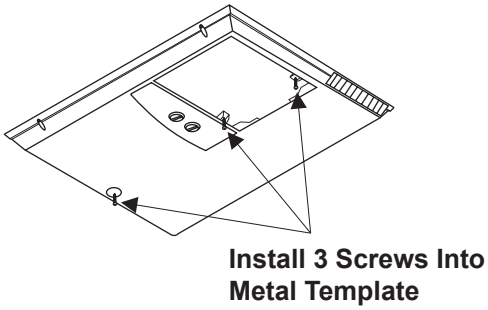

3. Snap hole plug into place at rear of air distribution box. See (FIG. 14).

FIG. 14

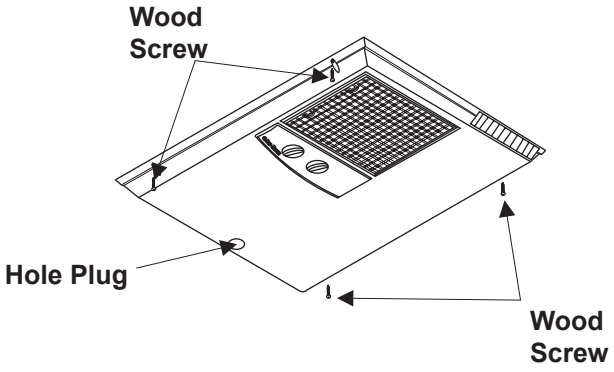

4. There are four optional mounting holes on the outer edge of the return air opening for which screws are not provided. These are only required where an uneven ceiling does not allow proper fitting of the air distribution box. See (FIG. 14).
5. Reinstall return air grille and filter into air distribution box.
6. The unit installation is now complete and is ready for operation. The power supply to the unit may now be turned on.
7. Verify that all features of the installed system work. Please read the following operating instructions before attempting to run the unit.

OPERATING INSTRUCTIONS

A. Controls

1. The Selector Switch has 8 positions including “OFF”. This controls fan speed, optional heating mode, and cooling modes. See (FIG. 15).

FIG. 15

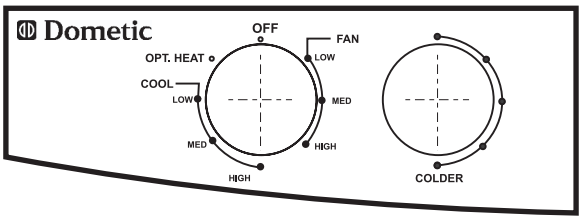

2. The Thermostat controls the temperature range at the filter between approximately 65 °F and 90 °F.

B. “OFF” Position

1. This is to turn unit off.

C. Cooling Operation

1. Set the thermostat at the desired temperature level.
2. Select the fan speed that best satisfies your needs:
   a. HIGH COOL: Selected when maximum cooling and dehumidification required.
   b. MED. COOL: Selected when normal or average cooling required.
   c. LOW COOL: Selected when room is at desired comfort level and needs to be maintained. Normally this speed used for night time operation.

The blower runs continuously to circulate air and maintain an even temperature. The compressor will come on as cooling is required to maintain the selected temperature level.

When the unit is turned on and the thermostat calls for cooling, the compressor will start. After shutting the unit down manually by either the selector switch or the thermostat **ALWAYS** wait 2-3 minutes before turning on the unit. This allows the refrigerant pressure in the system to equalize so the compressor may restart.

D. Heating Operation (With Optional Electric Heater Installed)

The heat modes of operation will **NOT** replace a furnace for heating your boat in cold weather. The intent is to remove the chill on cool days or mornings using a 1.6 kW heater.

1. Turn the selector switch to **“OPT HEAT”**.
2. The heat strip will come on and begin heating.
3. When desired temperature level in vehicle is reached, move the selector switch to **“OFF”** position or **“FAN”** position.

Thermostat does **NOT** control the fan/heater ON/OFF cycle.

E. Fan Operation

1. This will circulate the air in your boat without cooling or heating. There are three positions: HIGH FAN, MED. FAN or LOW FAN to select from, depending upon personal choice.

MAINTENANCE

A. Air Filter

1. Periodically (a minimum of every 2 weeks of operation) remove the return air filter located behind the return air grille and wash it with soap and warm water, let dry and then reinstall.

NEVER run the unit without return air filter in place. This will plug the unit evaporator coil with dirt and may substantially degrade the performance of the unit over time.

B. Air Distribution Box Housing

1. Clean air distribution box housing and control panel with a soft cloth dampened with a mild detergent. Never use furniture polish or scouring powders.

C. Fan Motor

1. The blower motor is factory lubricated and requires no service.

D. Frost Formation On Cooling Coil

1. Frost on a small portion of the coil is not unusual. Under certain conditions, ice may form on the evaporator coil. This is indicated by very cold output at very low air speed and the icing can be seen through the air inlet hole with the filter removed. If this should occur, inspect the filter and clean if dirty. Make sure air vents are open and not obstructed. Units have a greater tendency to frost when the outside temperature is relatively low. This may be prevented by adjusting the thermostat control knob to a warmer setting (counter clockwise). Should frosting continue, operate on any FAN ONLY setting until the cooling coil is free of frost; then resume normal operation. If frost condition persist, contact your local service center for assistance.

E. Heat Gain

The ability of the air conditioner to maintain the desired inside temperature depends on the heat gain of the boat. Some preventative measures taken by the occupants of the boat can reduce the heat gain and improve the performance of the air conditioner. During extremely high outdoor temperatures, the heat gain of the boat may be reduced by:

1. Mooring the boat in a shaded area
2. Using window shades (blinds and/or curtains)
3. Keeping windows and doors shut or minimizing usage
4. Avoiding the use of heat producing appliances
5. Adding heat-rejection film on windows

Operation on High Fan/Cooling mode will give optimum or maximum efficiency in high humidity or high outside temperatures.

Starting the air conditioner early in the morning and giving it a “head start” on the expected high outdoor ambient will greatly improve its ability to maintain the desired indoor temperature.

F. Condensation

The manufacturer of this unit will not be responsible for damage caused by condensation forming on ceilings, windows, or other surfaces. Air contains water vapor which condenses when temperature of a surface is below Dew point. During normal operation this unit is designed to remove a certain amount of moisture from the air, depending on the size of the space being conditioned. Keeping doors and windows closed when this air conditioner is in operation will greatly reduce the chance of condensation forming on interior surfaces.

SERVICE-UNIT DOES NOT OPERATE

If your unit fails to operate or operates improperly, check the following before calling your service center.

- Check your fuse or circuit breaker to see if it is open. Insure fuse is not burnt, or circuit breaker is “ON” and not activated.
- After the above checks, call your local service center for further help. This unit must be serviced by qualified service personnel only.
- If any wiring or supply cord is damaged and needs to be replaced, it must be replaced by the manufacturer or its service agent or a similarly qualified person.

To locate a service technician near you:

- Go to **WWW.dometic.com/marinedealers** or
- Call Dometic Marine at **1-800-542-2477** 8:00 AM to 5:00 PM Eastern Time, or **1-888-440-4494** after hours and weekends.

When calling for service, always give the following:

- Unit type and serial number found on the identification label located on base pan of unit bottom. Return air grille must be removed from air distribution box to view.
- Air distribution box model and serial number found on rating plate located on ceiling template. Observe this rating plate through the filter opening.

WIRING DIAGRAMS

A. Unit Wiring Diagram

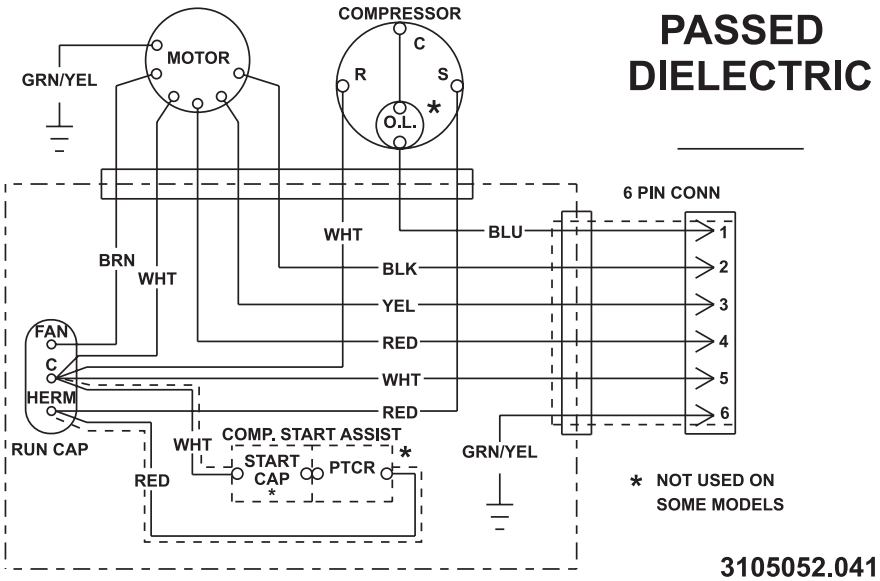

B. Air Distribution Box Wiring Diagram

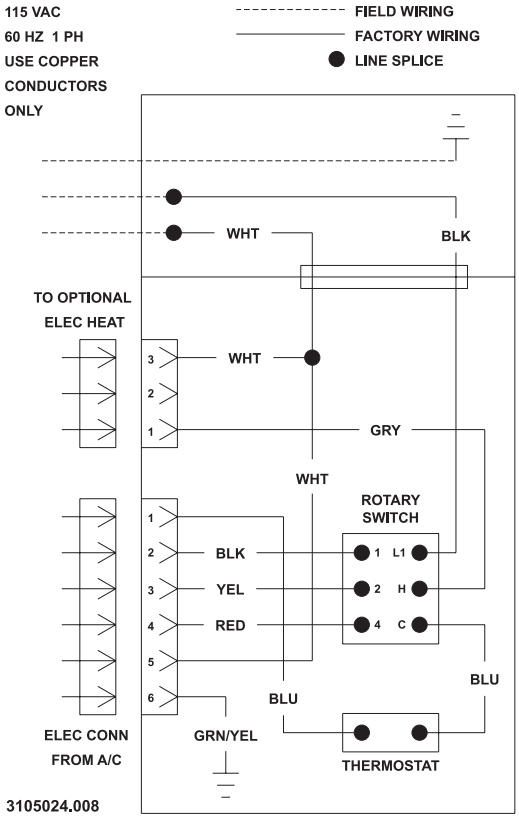

OWNER'S LIMITED WARRANTY

As hereinafter described, Dometic limits the duration of any implied warranty to the duration of the underlying express warranty and also disclaims any liability for consequential or incidental damages arising from any application, installation, use or malfunction of any warranted product.

A. WHAT'S COVERED

What does the Limited Warranty cover?

Products manufactured by Dometic Corporation (Dometic) are under limited warranty to be free from defects in workmanship or materials. This being under normal use and service, with the obligation of Dometic under this limited warranty, being limited to replacing or repairing any component(s) which shall disclose defects within the limits defined in **Section C**. Which upon examination by Dometic, shall appear to the satisfaction of Dometic to be defective or not up to specifications.

This Limited Warranty is made in lieu of all other express warranties, obligations, or liabilities on the part of Dometic. In addition, Dometic shall not be responsible for any incidental or consequential damages. In those instances in which a cash refund is made, such refund shall effect the cancellation of the contract of sale without reservation of rights on the part of the purchaser. **Such refund shall constitute full and final satisfaction of all claims which the purchaser has or may have against Dometic due to any actual or alleged breach of warranty, either express or implied, including, without limitation, any implied warranty or merchantability or fitness for a particular purpose**. Some states do not allow the exclusion or limitation of incidental or consequential damages so the above limitation may not apply to you.

The Dealer is not an agent for Dometic, except for the purpose of administering the above warranty to the extent herein provided. Dometic does not authorize the dealer or any other person to assume for Dometic any liability in connection with such warranty, or any liability or expense incurred in the replacement or repair of its products other than those expressly authorized herein. Dometic shall not be responsible for any liability or expense except as is specifically authorized and provided in this section.

Dometic reserves the right to improve its products, through changes in design or material without being obligated to incorporate such changes in products of prior manufacture. Dometic can make changes at any time in design, materials, or part of units of any one, model year, without obligation or liability to owners of units of the same year's model of prior manufacture.

This warranty gives you; the purchaser, specific legal rights, and you may also have other rights which vary from state to state. You also have implied warranty rights, including an implied warranty of merchantability, which means that your product must be fit for the ordinary purpose for which such goods are used. **The duration of any implied warranty rights is limited to the duration of the express warranty as found in Section C**. Some states do not allow limitations on how long an implied warranty lasts, so the above limitation may not apply to you.

B. WHAT'S NOT COVERED

What does this Limited Warranty not cover?

This Warranty Shall Not Apply to:

1. Failures resulting from improper installation or use contrary to instructions.
2. Failures resulting from abuse, misuse, accident, fire, or submergence.
3. Any part manufactured by Dometic, which shall have been altered so as to impair its original characteristics.
4. Any parts which fail as a result of misuse, improper application or improper installation.
5. Items not manufactured by Dometic, i.e., items, which are purchased from another manufacturer and supplied as received by Dometic without alteration or modification except as any part of a Dometic manufactured unit or component.
6. Components or parts used by or applied by the purchaser, as an integral part of products not manufactured by Dometic.
7. Labor resulting from difficult access to a Dometic product. The original installer or OEM is responsible for accessibility of unit.
8. Leaks due to improper installation of split systems and refrigeration systems, for example; packing glands, flare nuts, quick disconnects. The adjustment of the refrigerant charge on a split system should be charged to the original installer or OEM.
9. Freight Damage.
10. Pumps that have been run dry, are water damaged or have blown freeze plugs.
11. Pumps with cracked heads.
12. Pump seals are not covered.
13. UV light bulbs are not covered.
14. Liquid line filter dryers are not covered.
15. Blowers with water damage.
16. Logic boards with water damage. Logic boards with blown MOV's (Power Surge).

17. Mis-programmed displays.
18. Display heads with water damage.
19. Dirty Condensers and/or Evaporators.
20. Failures due to improper winterization.
21. Unit damage as a result of improper return packaging.
22. Replacement of freon with substitute without authorization from factory.
23. Environmental and/or Recovery Fees.
24. Welding and Nitrogen Fees.
25. Travel costs are included in the hourly labor allowances and should not be billed as a separate item without preapproval from the factory.

Installation and application of Dometic components is not warranted by Dometic, because Dometic has no control or authority over the selection, location, application, or installation of these components.

C. Coverage Period

What is the period of coverage?

(See **Limited Warranty Periods** at the end of this book).

All Dometic components bear a data plate on which there are model and serial numbers. The serial number is date coded. To determine whether or not any Dometic component is in warranty, proceed as follows:

1. Determine the manufacture date of the component from the serial number on the data plate. If you are not familiar with the date code, write or call the Dometic Customer Service Department to obtain the manufacture date. The hours of the Customer Service Department are 8:00 a.m. - 5:00 p.m. (USA, Eastern Standard Time Zone) Monday through Friday excluding holidays.
2. It is possible that there might exist a considerable time lag between the date a component is manufactured and the date it is put in service. In such instances, the date of manufacture could indicate that the item is out of warranty. However, based on the date the equipment is first put in service, the item may still be covered by the Dometic warranty as described in **Section A**. For proof of date put in service, Dometic will require a copy of the bill of sale of the Dometic equipment from the installer or new boat dealer to the original owner.

D. Getting Service

How do you get service?

Please read the following Warranty Procedure:

If the failure of a Dometic component is determined to be covered under the Dometic warranty and the time in service is determined to be within the warranty time limit, the owner has the following three options:

1. Preferred option: Have a Dometic authorized Servicing Dealer, perform the work needed. The customer needs to call Dometic Customer Service Department for a recommendation as to the closest dealer. If the customer already knows an authorized servicing dealer, the dealer should be contacted directly.
2. Second option: If the customer contacts Dometic Service Department for a Servicing Dealer and Dometic has no one in that particular area, Dometic will authorize the use of a local service company and Dometic will work with the local company to assist in any way possible.
3. Third option: The customer may send his equipment back to the factory to have the repair work done. Dometic will make every effort to return the equipment to the customer within a three week time period. If the claim represents a legitimate warranty problem, Dometic will pay the freight both ways. Dometic prefers option one first, option two second, and option three only if one and two are not available.

The customer may contact the Dometic Service Department at 954-973-2477 Monday through Friday, 8:00 a.m. - 5:00 p.m. Eastern Time. After hours (evening and weekends) technical support is offered through Dometic's 24/7 Hotline at 888-440-4494.

E. Table Of Warranty Periods

DOMETIC DURASEA ROOFTOP AIR CONDITIONING		
Important Notes: 1. Warranty periods begin from the date of possession of the boat by the first owner if OEM installed or date of installation if dealer installed, but not to exceed three (3) years from date of production. The warranty is transferable and will carry the remainder of the original owner's warranty based on the original date of purchase or date of installation. 2. Proof of purchase or installation may be required to verify warranty coverage. 3. Any unit or replacement part installed due to a warranty failure carries the remainder of the original warranty. Warranty coverage does not start over from the repair/replacement date. 4. Warranty coverage shall not exceed three (3) years from date of production. 5. These warranty periods are effective March 1, 2010.		
Product	**Sale Type**	**Warranty Coverage**
DuraSea Rooftop	OEM or Dealer Installed	1-Year Warranty, parts and labor. Not to exceed three (3) years from date of manufacture.