Dometic

RECORD THIS INFORMATION FOR FUTURE REFERENCE:

Model Number _____
Serial Number _____
Date Purchased _____
Retailer / Qualified Installer _____

TYPE 9500 CASSETTE AWNING

USA
SERVICE OFFICE
Dometic, LLC
2320 Industrial Parkway
Elkhart, IN 46516
574-294-2511

CANADA
Dometic, LLC
46 Zatonski, Unit 3
Brantford, ON N3T 5L8
CANADA
519-720-9578

For Service Center Assistance Call:
800-544-4881

⚠ WARNING

This manual must be read and understood before installation, adjustment, service, or maintenance is performed. This unit must be installed by a qualified service technician. Modification of this product can be extremely hazardous and could result in personal injury or property damage.

⚠ AVERTISSEMENT

Lire et comprendre ce manuel avant de procéder à l'installation, à des réglages, de l'entretien ou des réparations. L'installation de ce produit doit être effectuée par un réparateur qualifié. Toute modification de ce produit peut être extrêmement dangereuse et entraîner des blessures ou dommages matériels.

MODEL

20008(XX).001(#)	20008(XX).002(#)
20010(XX).001(#)	20010(XX).002(#)
20012(XX).001(#)	20012(XX).002(#)
20013(XX).001(#)	20013(XX).002(#)
20015(XX).001(#)	20015(XX).002(#)
20016(XX).001(#)	20016(XX).002(#)

OPERATING INSTRUCTIONS

3314429.000

Form No. 3314429.000 09/11
(French 3314430.000)

©2011 Dometic, LLC

LaGrange, IN 46761

Important: **These Instructions must stay with unit. Owner read carefully.**

SAFETY INSTRUCTIONS

This manual has safety information and instructions to help users eliminate or reduce the risk of accidents and injuries.

RECOGNIZE SAFETY INFORMATION

This is the safety alert symbol. It is used to alert you to personal injury hazards. Obey all safety messages that follow this symbol to avoid possible injury or death.

UNDERSTAND SIGNAL WORDS

A signal word, when used with the safety alert symbol, will identify a safety hazard and its level of risk for personal injury. A signal word, without the safety alert symbol, will be used for property damage messages only.

⚠ WARNING WARNING indicates a hazardous situation which, if not avoided, could result in death or serious injury.

⚠ CAUTION CAUTION, used with the safety alert symbol, indicates a hazardous situation which, if not avoided, could result in minor or moderate injury.

NOTICE NOTICE is used to address practices not related to personal injury.

⚠ WARNING

Read and follow all safety information and instructions to avoid possible injury or death.

GENERAL INSTRUCTIONS

⚠ WARNING

These instructions must be read and understood before operating this hardware. This hardware must be installed by a Dometic, LLC Service Center or a qualified service technician. Modification of this product can be extremely hazardous and could result in personal injury or property damage.

Optional accessories:
3313887.000 Kit, Support Leg
3313885.000 Kit, Tie Down Strap

Dometic, LLC reserves the right to modify appearances and specifications without notice.

PROCEDURE

A. Open Awning

⚠ CAUTION

PINCH HAZARD. A horizontal distance of at least 16″ must be maintained between the fully open awning and any permanent object. Failure to obey this caution could result in injury.

1. Place the hook end of hand crank into eye of gear. See FIG. 1.

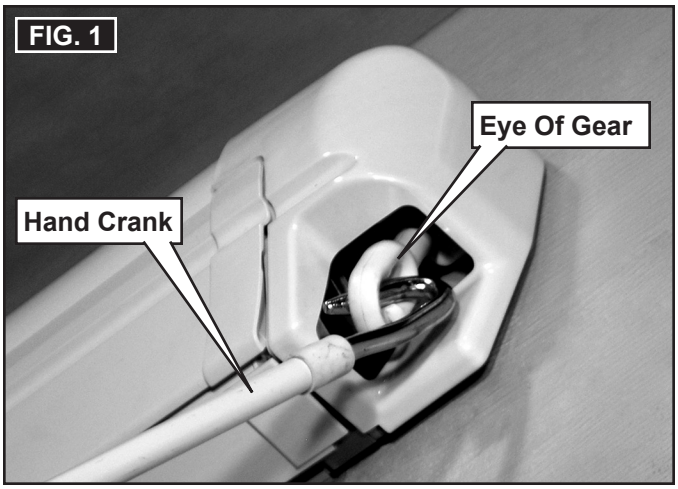

2. Rotate hand crank until awning is fully extended. See FIG. 1.

Note: The awning is fully extended when fabric starts to sag. See FIG. 2.

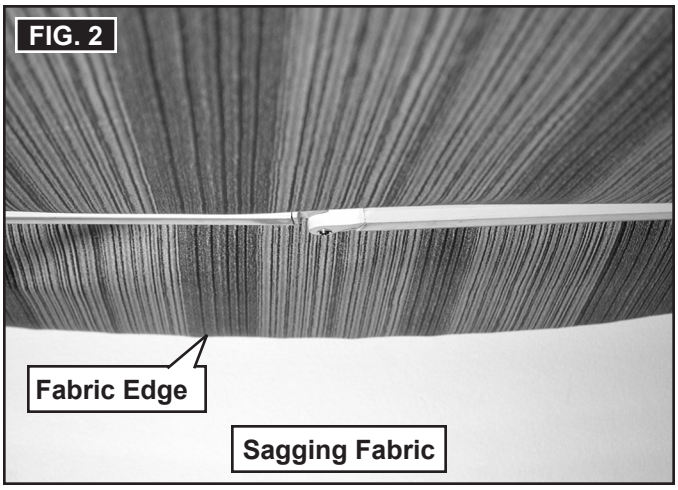

NOTICE

Do not allow awning fabric to rest on arm assemblies. Wind will cause awning fabric to rub against arm assemblies which could cause premature wear and abrasions.

3. When awning is fully extended (fabric is sagging), rotate hand crank back approximately 1/4 turn to obtain maximum tension. See FIG. 1 and 3.

Note: Fabric edges must be taut.

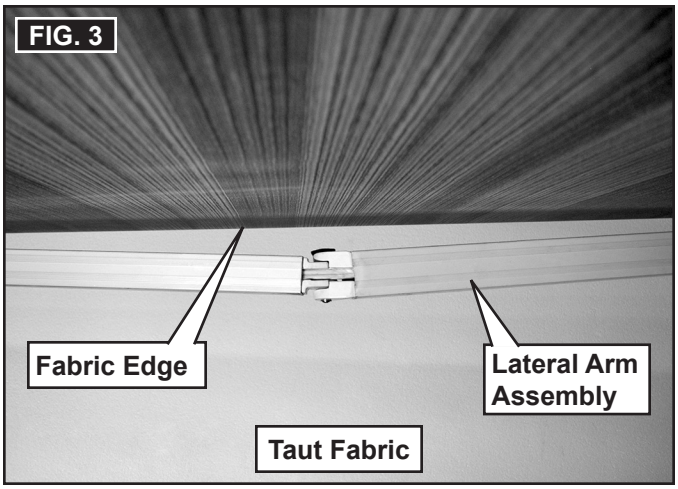

B. Prepare Awning To Shed Water

⚠ WARNING

IMPACT OR CRUSH HAZARD. Do not allow water to pool on awning fabric. This will make the awning unstable, and could cause the arm assemblies and lead rail to bend or collapse. Whenever heavy rain is expected, the awning must be placed in the stowed (closed) position. Failure to obey this warning could result in death or serious injury.

This awning is designed with a water shed feature that will automatically lower one side of the awning to allow for water run off during light rain.

Note: This water shed feature is meant for light rain only.

Important: If (optional) support legs are in use during light rain, one support leg must be lowered to create a slope from the other support leg.
See "Support Leg Kit" Installation & Operating Instructions for full instructions and safety information.

C. Close Awning

⚠ WARNING

IMPACT OR CRUSH HAZARD. Always close awning when snow, heavy rain, wind, and severe weather conditions are expected.
Do not approach awning if left open during high winds, if water has pooled, snow accumulated, or heavy debris is on awning fabric. The awning could move unpredictably, become unstable, and bend or collapse.
Failure to obey these warnings could result in death or serious injury.

1. Place the hook of the crank into the eye of the gear. Then rotate crank until awning is fully retracted. See FIG. 1.

Note: Make sure optional accessories (that interfere with operation) are removed from awning before closing.

D. General Care And Use

⚠ WARNING

Frequently examine awning for imbalance, or signs of wear or damage to cables and other critical parts. Do not operate awning if adjustments or repairs are necessary. Any adjustments or repairs must be performed by a Dometic, LLC Service Center or a qualified service technician.
Failure to obey these warnings could result in death or serious injury.

⚠ WARNING

IMPACT OR CRUSH HAZARD. Never leave an open awning unattended. Keep the awning stowed (closed) when snow, heavy rain, wind, and severe weather conditions are expected. Do not allow water to pool, snow to accumulate, or heavy debris on awning fabric. Do not hang or place anything on awning. This will make the awning unstable, and could cause it to bend or collapse.
Failure to obey these warnings could result in death or serious injury.

1. When heavy rain and/or wind conditions are expected, retract awning and place in stowed (closed) position.
2. Always make sure awning is positioned high enough to accommodate entry door's swing clearance before opening entry door.

NOTICE

Do not use silicone sprays near labels. This could weaken label's adhesive bond to product surfaces.

3. Lubricate lateral arm assemblies with paraffin wax or silicone spray as needed. See FIG. 3.

⚠ WARNING

FIRE HAZARD. Keep barbecue grills and fire away from awning. Failure to obey this warning could cause smoke damage, or a fire resulting in death or serious injury.

NOTICE

Do not use insecticides or other sprays near awning fabric, which could cause stains and adversely affect the fabric's ability to repel water.

4. Do not expose awning to adverse environmental conditions, corrosive agents, or other harmful conditions.

⚠ CAUTION

PINCH HAZARD. A horizontal distance of at least 16″ must be maintained between the fully open awning and any permanent object. Failure to obey this caution could result in injury.

5. Do not face awning toward permanent objects that may interfere with awning operation.

NOTICE

Never roll up awning for storage when wet. The combination of moisture and dirt could result in mildew, discoloration, and stains.

6. If it is necessary to roll up awning (temporarily) while it's wet, make sure you roll it out and let it dry (as soon as conditions allow) before rolling it up again.

⚠ WARNING

IMPACT OR CRUSH HAZARD. Do not transport RV if awning fabric is torn / damaged, even if awning closes successfully. The cassette awning utilizes the awning fabric to reel in the lateral arm assemblies and lead rail, and holds the awning closed. Damaged awning fabric could compromise the structural integrity of the cassette awning, which could allow awning to extend quickly and unexpectedly during transit. Failure to obey this warning could result in death or serious injury.

7. If awning fabric is torn / damaged, contact a qualified Dometic service technician for on-site repair.

Note: If adverse weather conditions are expected before technician arrives, all lateral arm assemblies should be securely tied (with fabric strapping or light rope) near shoulder and wrist to close awning as much as possible. See FIG. 4.

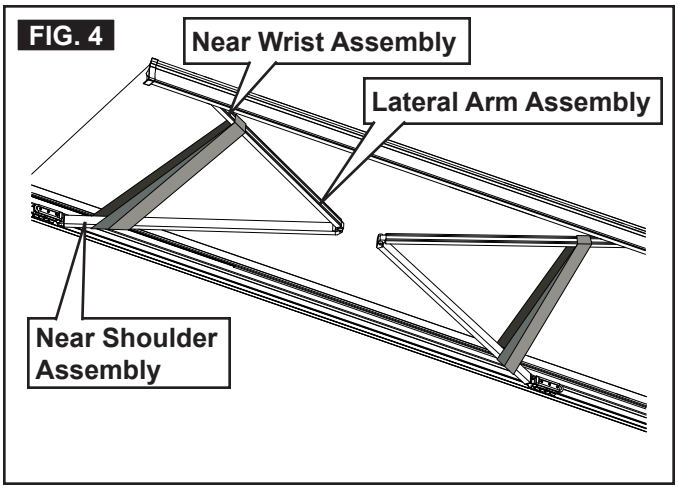

NOTICE

Do not allow dirt, leaves, or other debris to accumulate on awning, which could cause abrasion and stains.
Mildew could grow on dirt and organic debris causing permanent discoloration, stains, and odors to awning fabric.

8. Periodically clean awning fabric.

E. Fabric Care

Vinyl fabric offers the advantage of durability and water resistance.

1. To clean:
   a. Mix 1/4 cup dish soap and 1/4 cup bleach to 5 gallons of fresh water.

NOTICE

Avoid using caustic household cleaners, mildew removers, or hard bristle brushes.

   b. Soap the open awning with this solution, then let stand for 5 minutes.

NOTICE

Make sure you completely remove solution from awning fabric. Bleach will degrade vinyl awning fabric if not completely rinsed off.

   c. Thoroughly hose off top and bottom of fabric with clean water.
   d. Repeat as necessary to completely remove solution, and allow awning to dry thoroughly before stowing (rolling up).
2. To repair a pinhole, or if a spot of coating flakes off from the top layer of vinyl:
   a. Apply a very small dab of VLP (Vinyl Liquid Patch) on the tip of a cotton swab.
   b. Gently roll the cotton swab around the pinhole. The VLP will melt the coating (on the fabric) and that will quickly fill in the pinhole and blend with all colored vinyls.
   c. Wait until the VLP (Dometic P/N 3314216.000) fully cures before rolling up the awning.

F. When To Get More Help

1. If malfunctions occur that cannot be corrected by reviewing these instructions, contact a qualified Dometic service technician.