Dometic

RECORD THIS UNIT INFORMATION FOR FUTURE REFERENCE:	
Model Number	_____
Serial Number	_____
Date Purchased	_____

Roof Top Unit			
Description	Model	Use With Return Air Grill	
		Model	Analog Thermostat
Air Conditioner	541416A	3105007.XXX OR 3105935.XXX	3106995.032 Cool/Furn 3106995.040 Cool/Furn/HP 3106995.065 Cool/Furn/HS

USA
SERVICE OFFICE
Dometic, LLC
2320 Industrial Parkway
Elkhart, IN 46516
574-294-2511

CANADA
Dometic, LLC
46 Zatonski, Unit 3
Brantford, Ontario
CANADA N3T 5L8
519-720-9578

For Service Center Assistance Call:
800-544-4881

C US

This unit is designed for OEM installation. All initial installations must be approved by Dometic, LLC

⚠ WARNING

This manual must be read and understood before installation, adjustment, service, or maintenance is performed. This unit must be installed by a qualified service technician. Modification of this product can be extremely hazardous and could result in personal injury or property damage.

⚠ AVERTISSEMENT

Lire et comprendre ce manuel avant de procéder à l'installation, à des réglages, de l'entretien ou des réparations. L'installation de ce produit doit être effectuée par un réparateur qualifié. Toute modification de ce produit peut être extrêmement dangereuse et entraîner des blessures ou dommages matériels.

MODELS

541416A70X

INSTALLATION INSTRUCTIONS

3314373.000

Form No. 3314373.000 7/11
(French 3314374.000)

©2011 Dometic, LLC

LaGrange, IN 46761

Important: **These instructions must stay with unit. Owner read carefully.**

SAFETY INSTRUCTIONS

This manual has safety information and instructions to help users eliminate or reduce the risk of accidents and injuries.

RECOGNIZE SAFETY INFORMATION

This is the safety alert symbol. It is used to alert you to personal injury hazards. Obey all safety messages that follow this symbol to avoid possible injury or death.

UNDERSTAND SIGNAL WORDS

A signal word, when used with the safety alert symbol, will identify a safety hazard and its level of risk for personal injury. A signal word, without the safety alert symbol, will be used for property damage messages only.

⚠ WARNING WARNING indicates a hazardous situation which, if not avoided, could result in death or serious injury.

⚠ CAUTION CAUTION, used with the safety alert symbol, indicates a hazardous situation which, if not avoided, could result in minor or moderate injury.

NOTICE NOTICE is used to address practices not related to personal injury.

⚠ WARNING

Read and follow all safety information and instructions to avoid personal injury.

GENERAL INFORMATION

A. Product features or specifications as described or illustrated are subject to change without notice.

B. This Air Conditioner (hereinafter referred to as the "unit") Is Designed For:
1. Installation on a recreational vehicle at the time the vehicle is manufactured.
2. Mounting on the roof of a recreational vehicle.
3. Roof construction with rafters/joists on minimum of 16 inch centers.
4. Minimum of 2 inches and maximum of 5-1/2 inches distance between roof to ceiling of recreational vehicle. Alternate installation methods will allow for roofs more than 5-1/2 inches thick.

C. The ability of this air conditioner to maintain the desired inside temperature depends on the heat gain of the RV. Some preventative measures taken by the occupants of the RV can reduce the heat gain and improve the performance of the air conditioner. During extremely high outdoor temperatures, the heat gain of the vehicle may be reduced by:
1. Parking the RV in a shaded area
2. Using window shades (blinds and/or curtains)
3. Keeping windows and doors shut or minimizing usage
4. Avoiding the use of heat producing appliances

Operation on High Fan/Cooling mode will give optimum or maximum efficiency in high humidity or high outside temperatures.

Starting the air conditioner early in the morning and giving it a "head start" on the expected high outdoor ambient will greatly improve its ability to maintain the desired indoor temperature.

For a more permanent solution to high heat gain, accessories like Dometic outdoor patio and window awnings will reduce heat gain by removing the direct sun. They also add a nice area to enjoy company during the cool of the evening.

D. Condensation

Note: The manufacturer of this unit will not be responsible for damage caused by condensed moisture on ceilings or other surfaces. Air contains moisture and this moisture tends to condense on cold surfaces. When air enters the RV, condensed moisture may appear on the ceiling, windows, metal parts, etc. During normal operation this unit removes moisture from the air. Keeping doors and windows closed when this air conditioner is in operation will minimize condensed moisture on cold surfaces.

SPECIFICATIONS

Model No.	Nominal Capacity (BTU HR) Cooling	Electrical Rating 120 VAC 60Hz. 1PH	Compressor Rated Load Amps	Compressor Locked Rotor Amps	Fan Motor Rated Load Amps	Fan Motor Locked Rotor Amps	Refrigerant R-410A (Oz.)	Minimum Wire Size* 12 AWG Copper Up to 24'	AC Circuit Protection ***Installer Supplied	Minimum Generator Size** 1 Unit / 2 Units
541416A70X	15,000		13.2	60.0	2.8	7.6	29.5		20 Amp	3.5 KW / 5.0 KW

* For wire length over 24 ft., consult the National Electric Code for proper sizing.

** Dometic, LLC gives **GENERAL** guidelines for generator requirements. These guidelines come from experiences people have had in actual applications. When sizing the generator, the total power usage of your recreational vehicle must be considered. Keep in mind generators lose power at high altitudes and from lack of maintenance.

*** CIRCUIT PROTECTION: Time Delay Fuse or Circuit Breaker Required.

INSTALLATION INSTRUCTIONS

A. Precautions

⚠ WARNING

Improper installation may damage equipment, could endanger life, cause serious injury and/ or property damage.

1. Read Installation and Operating Instructions carefully before attempting to start this unit installation.
2. Dometic, LLC will not be liable for any damages or injury incurred due to failure in following these instructions.
3. Installation must comply with the National Electrical Code ANSI/NFPA-70 and CSA Standard C22.1 (latest edition) and any State or Local Codes or regulations.
4. **DO NOT** add any devices or accessories to this unit except those specifically authorized in writing by Dometic, LLC.
5. This equipment must be serviced by qualified personnel and some states require these people to be licensed.

B. Choosing Proper Location For The Unit

This unit is specifically designed for installation on the roof of a recreational vehicle (RV). When determining your cooling requirements, the following should be considered:

- Size of RV;
- Window area (increases heat gain);
- Amount of insulation in walls and roof;
- Geographical location where the RV will be used;
- Personal comfort level required.
  1. For one unit installation: The unit should be mounted slightly forward of center (front to back) and centered from side to side.
  2. For two unit installations: Install one unit 1/3 and one unit 2/3's from front of RV and centered from side to side.

It is preferred that the unit be installed on a relatively **flat and level** roof section measured with the RV parked on a level surface, but up to a 15° tilt is acceptable.

3. After Location Has Been Selected:
   a. Check for obstructions in the area where unit will be installed. See FIG. 1.

FIG. 1

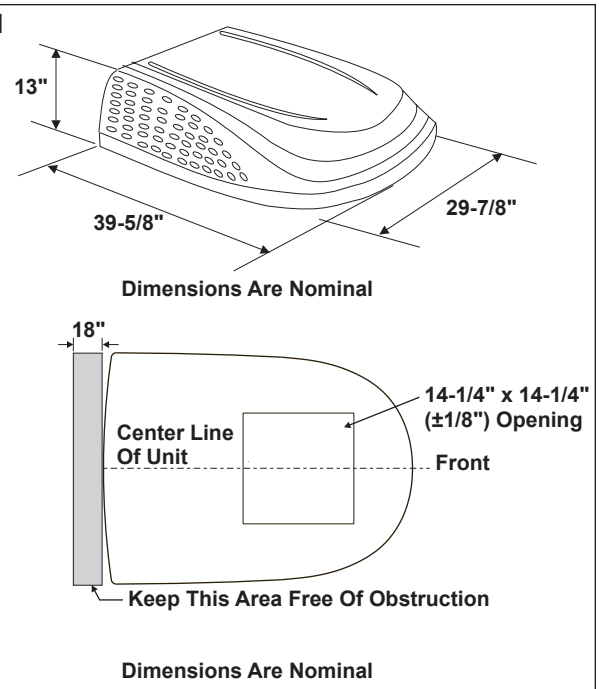

   b. The roof must be designed to support 130 pounds when the RV is in motion. Normally a 200 lb. static load design will meet this requirement.

NOTICE

It is the responsibility of the installer of this system to ensure structural integrity of the RV roof. Never create a low spot on the roof where water will collect. Water standing around the unit may leak into the interior causing damage to the product and the RV.

   c. Check inside the RV for return air grill obstructions (i.e. door openings, room dividers, curtains, ceiling fixtures, etc.) See FIG. 2.

FIG. 2

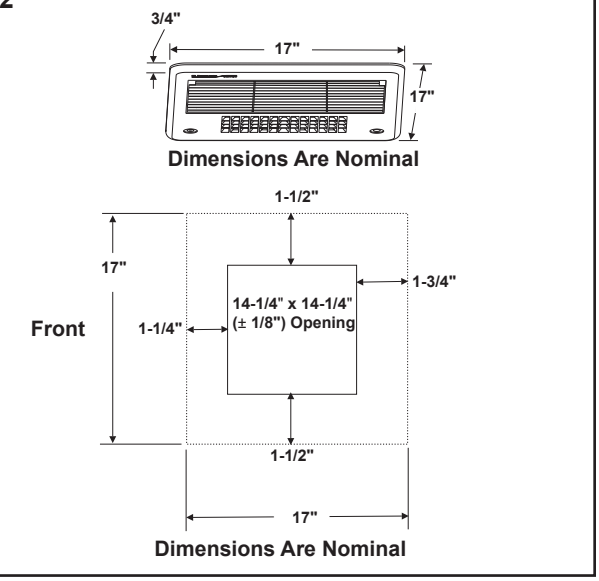

C. Roof Preparation

1. Opening Requirements - Before preparing the ceiling opening, the type of system options must be decided upon. Read all of the following instructions before beginning the installation.

⚠ WARNING

There may be electrical wiring between the roof and the ceiling. Disconnect 120 VAC power cord and the positive (+) 12 VDC terminal at the supply battery. Failure to obey this instruction may create a shock hazard causing death or severe personal injury.

2. Mark a 14-1/4" x 14-1/4" (±1/8") square on the roof and carefully cut the opening. The 14-1/4" x 14-1/4" (±1/8") opening is part of the return air system of the unit and must be finished in accordance with ANSI A119.2.
3. Using the roof opening as a guide, cut the matching hole in the ceiling.
4. The opening created must be framed to provide adequate support and prevent air from being drawn from the roof cavity. Framing stock 3/4" or more in thickness must be used. Remember to provide an entrance hole for power supplies, 7 conductor cable, and furnace wiring (if applicable).

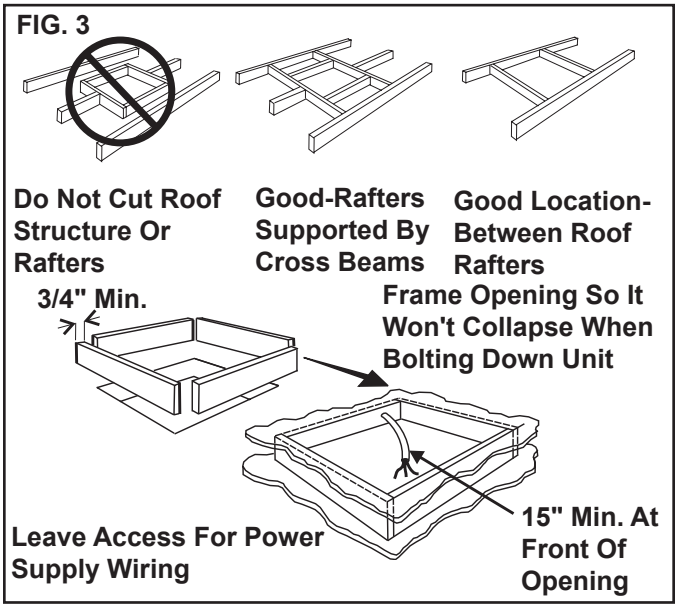

NOTICE

It is the responsibility of the installer of this system to ensure structural integrity of the RV roof. Never create a low spot on the roof where water will collect. Water standing around the unit may leak into the interior causing damage to the product and the RV.

D. Air Distribution Duct System Sizing & Design (See Chart On Page 6)

NOTICE

It is the responsibility of the installer to insure the duct work will not collapse or bend during and after the installation. Dometic, LLC will not be liable for roof structural or ceiling damage due to improperly insulated, sealed or collapsed duct work.

The Installer of this system must design the air distribution system for their particular application. Several requirements for this system **MUST** be met for the unit to operate properly. These requirements are as follows:

1. The duct material must meet or exceed any agency or RVIA Standard that may be in existence at the time the RV is produced.
2. All discharge air ducts must be properly insulated to prevent condensation from forming on their surfaces or adjacent surfaces during operation of the unit. This insulation must be R-7 minimum.

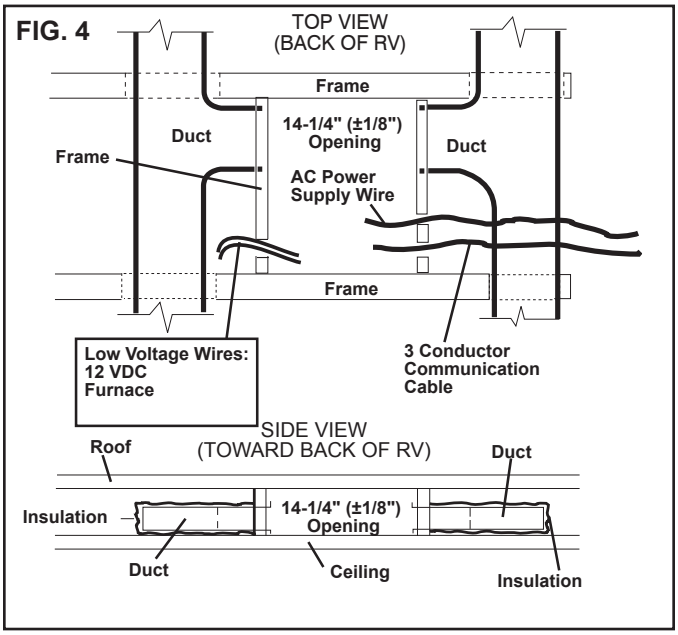

3. Ducts and their joints must be sealed to prevent condensation from forming on adjacent surfaces during operation of the unit.
4. Return air openings must have 40 square inches minimum free area including the filter.
5. Return air to the unit must be filtered to prevent dirt accumulation on unit cooling surface.
6. Air Distribution System Installation
   a. Dometic, LLC recommends the basic configuration shown on page 6, for installing this system. We have found by testing, that this configuration works best in most applications of this system. It is the responsibility of the installer of this system to review each RV floor plan and determine the following:

- Duct size
- Duct layout
- Register size
- Register location
- Thermostat location

These items must be determined in conjunction with the Air Distribution Duct System Sizing and Design Requirements listed in the chart below.

Important: Alternate configurations and methods may be used which still allow the unit to operate properly; however, these alternate configurations and methods must be approved by Dometic, LLC in writing. The following instructions are based upon the use of Return Air Grill Kits 3105007.XXX & 3105935.XXX.

Air Distribution Duct Sizing & Design Chart For Ducted Applications

	Return Air Grill Kit 3105007.XXX 3105935.XXX
Roof Cavity Depth	2.0 In. Min. - 5-1/2 In. Max.
Duct Cross Sectional Area	21.0 Sq. In. Min.
Duct Size	
Depth	1-1/2 In. Min. - 2-1/2 In. Max.
Width	7.0 In. Min. - 10.0 In. Max.
Total Duct Length	15.0 Ft. Min. - 40.0 Ft. Max.
Duct Length (short run)	1/3 Total Duct Length
Register Requirements	
Number Required Per Run	4 Min.
Register Free Air Area	14.0 Sq. In.
Distance From Duct End	5.0 In. Min. - 8.0 In. Max.
Distance From Elbow	15.0 In.
Total System Static Air Pressure Blower at High Speed, Filter & Grill In Place	0.70 - 1.10 In. W.C. 541416 Series

Note: Duct sizes listed are inside dimensions.

FIG. 5 **Duct Size And Requirements For 3105007.XXX And 3105935.XXX Return Air Grill**

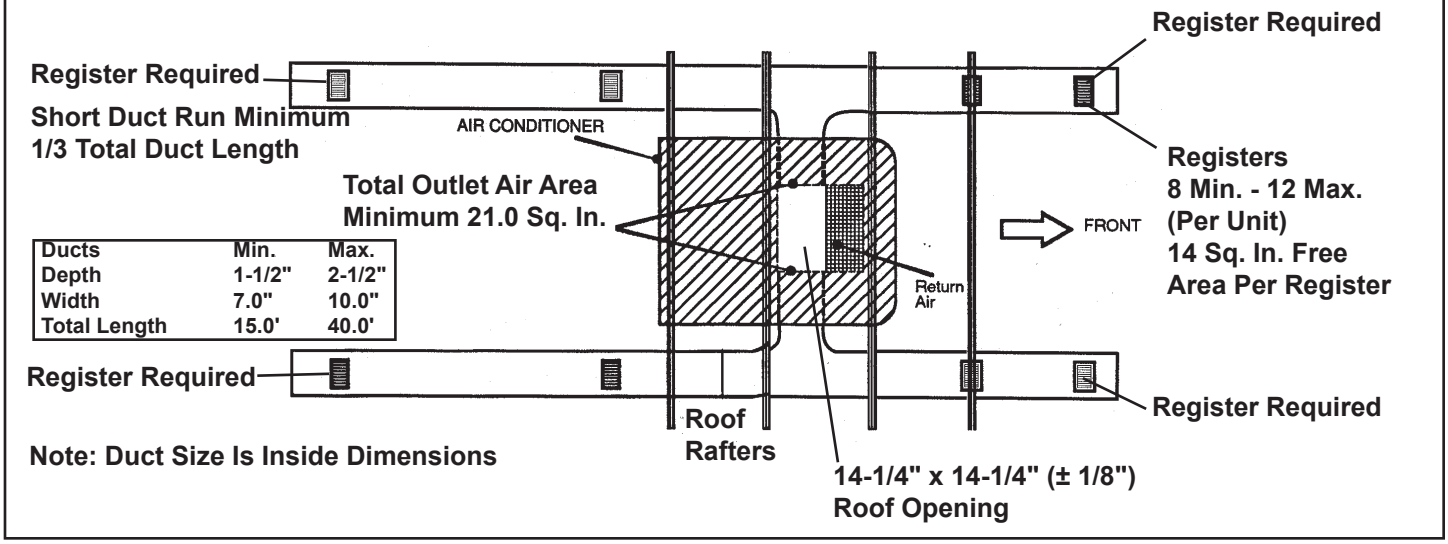

Ducts	Min.	Max.
Depth	1-1/2"	2-1/2"
Width	7.0"	10.0"
Total Length	15.0'	40.0'

E. Wiring Requirements

1. Route a copper, with ground, 120 VAC supply wire from the time delay fuse or circuit breaker box to the roof opening. The proper size wire can be determined from chart on page 3.
   a. This supply wire must be located in the front portion of the 14-1/4" x 14-1/4" (±1/8") opening.
   b. The power MUST be on an appropriately sized separate time delay fuse or circuit breaker. The proper size protection can be determined from the chart on page 3.
   c. Make sure that at least 15" of supply wire extends into the roof opening. This insures an easy connection at the junction box.
   d. Wiring must comply with the National Electrical Code ANSI/NFPA-70 and CSA Standard C22.1 (latest edition) and any State or Local Codes or regulations.
   e. Protect the wire where it passes into the opening with approved method. See paragraph "d" above.
2. Route a dedicated 12 VDC supply wire (18-22 AWG) from the RV's converter (filtered side) or battery to the roof opening.
   a. This supply wire must be located in the front portion of the 14-1/4" x 14-1/4" (±1/8") opening.
   b. Make sure that at least 15" of supply wire extends into the roof opening.
3. Route a seven conductor cable, 18 to 22 AWG, from the analog thermostat mounting position into the 14-1/4" x 14-1/4" (±1/8") roof opening. Make sure that at least 15" of the wire extends into the roof opening and 6" extends from the wall at the thermostat mounting location. See Section F.
4. If system includes a gas furnace, route two 18 gauge thermostat wires from the furnace to the roof opening of the unit that will control it. If more than one furnace is to be used, route the second set of thermostat wires to the second unit. Make sure that 15" of wire extends into the opening.

F. Choosing Thermostat Location

The proper location of the thermostat is very important to ensure that it will provide a comfortable RV temperature. Observe the following rules when selecting a location:

1. Locate the thermostat 54" above the floor.
2. Install the thermostat on a partition, not on an outside wall.
3. **NEVER** expose the thermostat to direct heat from lamps, sun or other heat producing items.
4. Avoid locations close to doors that lead outside, windows or adjoining outside walls.
5. Avoid locations close to supply registers and the air from them.

G. Thermostat and Thermostat Cable Installation

1. Analog Thermostat

Note: Wire colors listed for the seven conductor cable are the most common used in the RV industry. Wire colors may vary.

FIG. 6

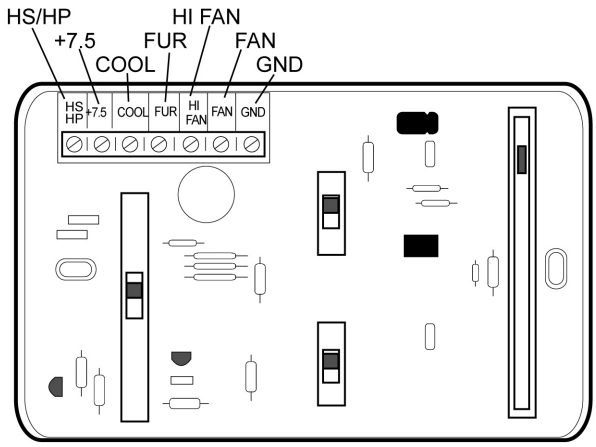

   a. Remove the cover from the analog thermostat by starting at one corner and gently lifting it from the base.
   b. Insert the previously run seven (7) conductor cable through the hole in the base assembly.
   c. Cut back the outer cable shield approximately 3 inches and strip 1/4” insulation from each wire.
   d. Mount the thermostat level on the wall using the screws provided.
   e. Make the following connections to the thermostat. See FIG 6.
      - Red/white wire to the +7.5 terminal
      - Green wire to the “GND” terminal
      - Yellow wire to “COOL” terminal
      - Tan wire to the “FAN” terminal
      - Blue wire to the “HI FAN” terminal
      - Orange wire to the “HS/HP” terminal
      - White wire to the “FUR” terminal if applicable
   f. Inspect all connections to make sure they are tight and not touching any other terminals or wires.
   g. Push the wires back through the base into the wall. Place cover on the thermostat and push until an audible click is heard.

H. Placing The Unit On The Roof

⚠ WARNING

Personal injury hazard. This unit weighs approximately 100 pounds. To prevent back injury, use a mechanical hoist to place unit on roof. Failure to obey this warning could cause severe personal injury.

1. Remove the unit from the carton and discard carton.
2. Place the unit on the roof.
3. Lift and place the unit over the prepared opening using the gasket on the unit as a guide. See FIG. 7.

NOTICE

Property damage hazard. Do not slide the unit. Failure to obey this warning may damage the neoprene gasket attached to the bottom and create a leaky installation.

FIG. 7

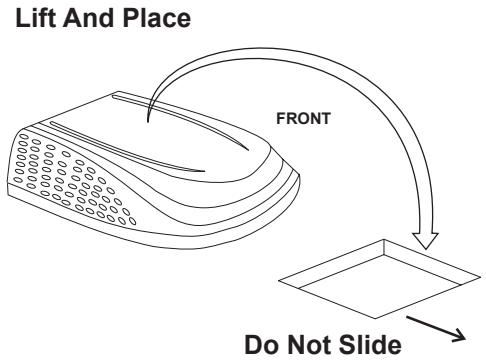

4. Place the return air cover kit inside the RV. This box contains mounting hardware for the unit and will be used inside the RV.

This completes the outside work. Minor adjustments can be done from inside the RV if required.

I. Installing The Unit

1. Check gasket alignment of the unit over the roof opening and adjust if necessary. Unit may be moved from below by slightly lifting. See FIG. 8. When installing 3105007.XXX or 3105935.XXX return air kit, remove gasket strip from bottom of base pan and discard.

FIG. 8

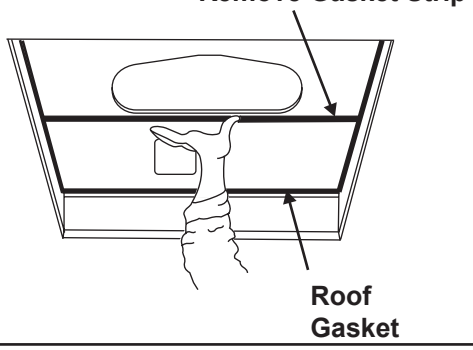

2. Remove return air cover and ceiling template from carton.

FIG. 9

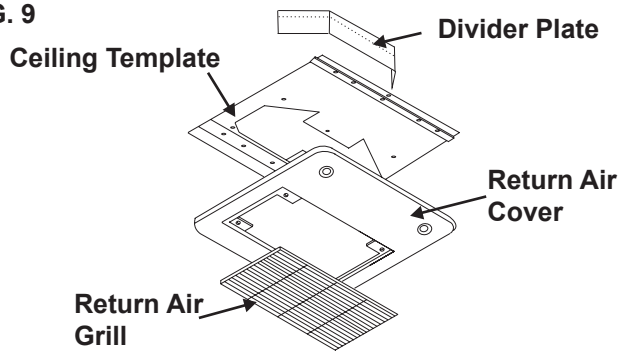

3. All models listed in this manual will use a four (4) bolt pattern for installing the return air cover kit. These bolts are furnished in part number 3100895.006 (bolt kit) and is purchased separately.
4. Reach up into the return air opening and pull the unit electrical cord down. See FIG. 10.

FIG. 10

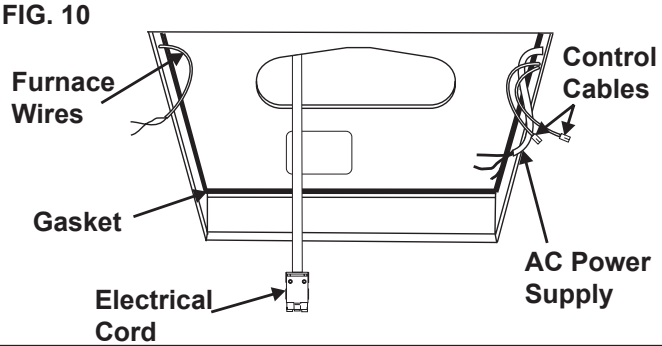

5. Hold the ceiling template up to the 14-1/4" x 14-1/4" (±1/8") opening. Be sure the large plate faces the rear of the RV.
6. Start each mounting bolt through the ceiling template and up into the unit base pan by hand. Install wood screw in each end of the ceiling template. This insures a tight fit of the return air cover to ceiling. See FIG. 11.

FIG. 11

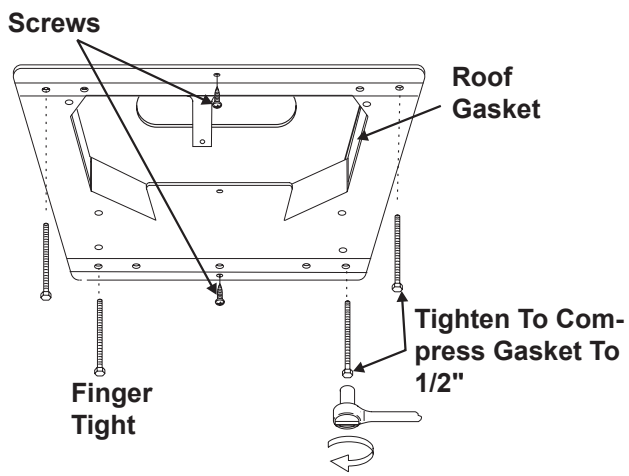

<u>Evenly</u> tighten the four mounting bolts to a torque of 40 to 50 inch pounds. This will compress the roof gasket approximately 1/2". The bolts are self locking so further tightening is not necessary. See FIG. 11.

NOTICE

If bolts are left loose there may not be an adequate roof seal or if over tightened, damage may occur to the unit base or ceiling template. Tighten to torque specifications listed in this manual.

7. Installation of Divider Plate
   a. Measure the ceiling to roof thickness:
      - If distance is 2.0" - 3-3/4", remove perforated tab from divider plate.
      - If distance is 3-3/4" - 5-1/2", remove no tabs.
   b. Remove the backing paper from double sided tape located on ceiling template. See FIG. 12.

FIG. 12

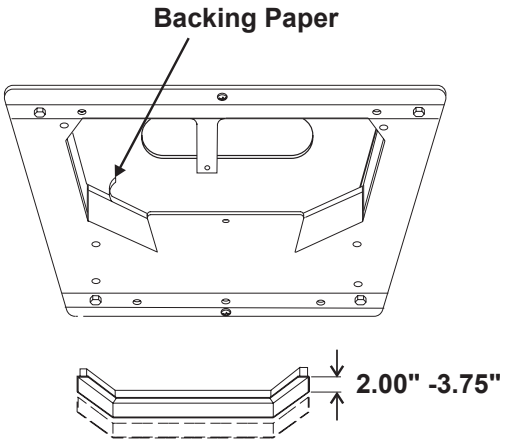

   c. Place divider plate up to bottom of the unit base pan firmly. The foam tape on the divider plate must seal to bottom of base pan. See FIG. 13.

NOTICE

Improper installation and sealing of divider plate will cause the compressor to quick cycle on the cold control. This may result in fuse or circuit breaker opening and/or lack of cooling.

FIG. 13

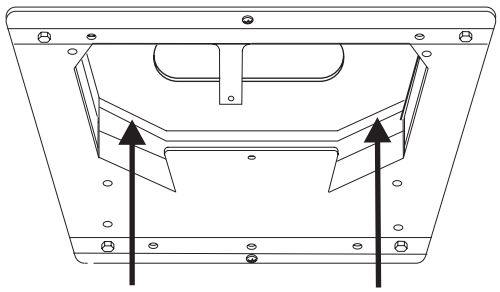

Note: The adhesive on the insulation is extremely sticky. Be sure the part is located where desired before pressing into place.

   d. With slight pressure push the divider plate against the double sided tape on the ceiling template.
   e. Locate the 1/8" x 7" x 18" self -adhesive insulation supplied with the return air kit. Remove the backing paper from the insulation and carefully stick onto the ceiling template divider panel. See FIG. 14.

FIG. 14

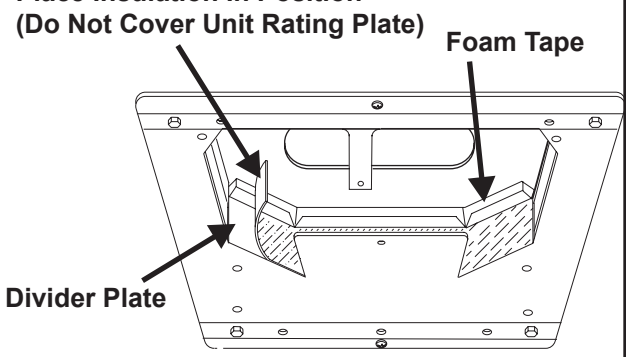

- Excess width is intended to seal the divider plate to the sides of the 14-1/4" x 14-1/4" (±1/8") opening. This is to help prevent cold air discharge from circulating into the unit return air opening.
- If the insulation is too high, stick excess height of insulation to the unit base pan. Do not cover up unit rating plate.

J. Wiring The System

Reach up into the return air opening and pull the remaining wires down. See FIG. 10.

1. Low Voltage Wire Connections

NOTICE

Disconnect the positive (+) 12 VDC terminal at the supply battery. Damage to equipment could occur if the 12 VDC is not shut off.

a. Connect the previously run +12 VDC supply wire to the red wire protruding from the unit return air opening.
b. Connect the previously run –12 VDC supply wire to the black wire protruding from the unit return air opening.
c. Connect the previously run furnace thermostat wires (if applicable) to the blue/white wires protruding from the unit return air opening. The polarity of these connections does not matter.
d. Connect the red/white wire protruding from the unit return air opening to the seven wire cable thermostat +7.5 terminal.
e. Connect the green wire protruding from the unit return air opening to the seven wire cable thermostat “GND” terminal.
f. Connect the yellow wire protruding from the unit return air opening to the seven wire cable thermostat “FAN” terminal.
g. Connect the tan wire protruding from the unit return air opening to the seven wire cable thermostat “FAN” terminal.
h. Connect the blue wire protruding from the unit return air opening to the seven wire cable thermostat “HI FAN” terminal.
i. Connect the orange wire protruding from the unit return air opening to the seven wire cable thermostat “HS/HP” terminal (if applicable).
j. Connect the white wire protruding from the unit return air opening to the seven wire cable thermostat “FUR” terminal (if applicable).

2. 120 VAC Power Supply Connection

⚠ WARNING

Disconnect 120 VAC. Failure to obey these instructions could create a shock hazard causing death or severe personal injury.

Note: Wiring must comply with the National Electrical Code ANSI/NFPA-70 and CSA Standard C22.1 (latest edition) and any State or Local Codes or regulations.

⚠ WARNING

This product is equipped with a 3 wire (grounded) system for protection against shock hazard. Make sure that the unit is wired and that you connect into a properly grounded 120 VAC circuit and the polarity is correct. Failure to do so could result in death, personal injury or damage to the equipment.

a. Carefully strip and prepare wires as shown in FIGS. 15-19.

FIG. 15

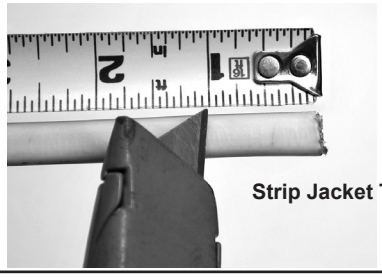

FIG. 16

FIG. 17

Use Tip Of Pliers To HOLD Wire In Place While Hand Bending Wire At 90°

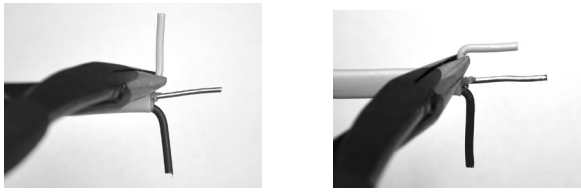

FIG. 18

Repeat With Other Wire

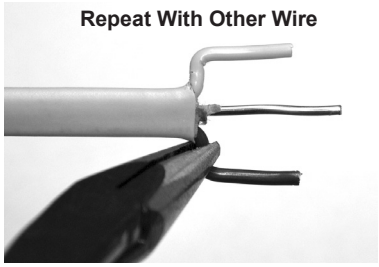

FIG. 19

Trim Ground Wire To Length Of Outer Wires.

b. Hold the clear strain relief cover with bottom facing upward as shown in FIG. 20.

FIG. 20 Load Cable Into Strain Relief

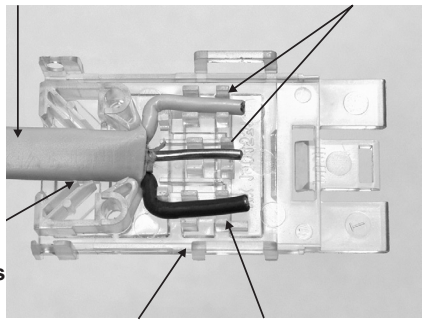

c. Lay wire into locator slots, making sure the black wire is placed into the polarization slot as shown in FIG. 20.

d. Press the cable sheath into the integral strain relief slot as shown in FIG. 20. Trimming of ground wire and possibly others will be necessary. Wires must not extend beyond the locators as shown in FIG. 21.

FIG. 21

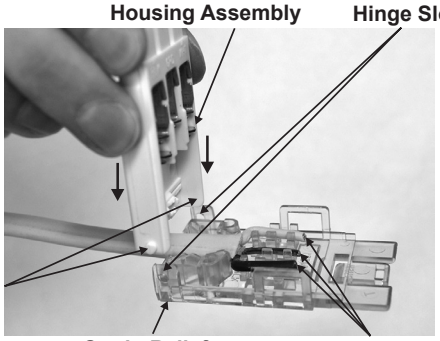

e. While holding the strain relief cover, position the housing's hinge posts into the hinge slots and press down until both lock into place as shown in FIG. 21.

f. Close the strain relief cover and housing by hand. Squeeze the top and bottom closed with tongue and groove pliers as shown in FIG. 22. Pliers must be a minimum of 10" long. Squeeze firmly on both sides, squarely across the connector between ribs A and B to ensure wires seat completely into slots.

FIG. 22 Attaching Housing Assembly To Strain Relief Cover With Tongue And Groove Pliers, Squeeze Squarely & Firmly Between Ribs A AND B

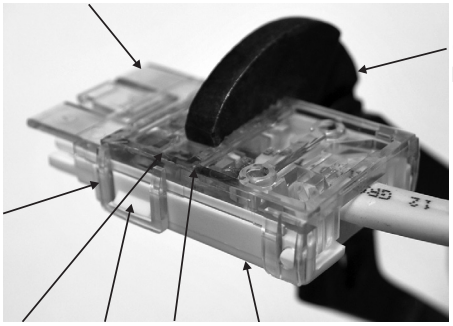

g. Inspect the connector to ensure the wires have been properly engaged into the housing assembly contacts. A properly terminated wire is fully seated into its proper slots with no significant bow of the cover. <u>If the wires extend past the insulation stops, the wires must be re-terminated with a NEW CONNECTOR. Once the cover has been closed the connector cannot be re-used. Failure to comply with this procedure may result in the failure of the connector.</u>

h. Mating and un-mating the completed connector is illustrated in FIG. 23.

FIG. 23

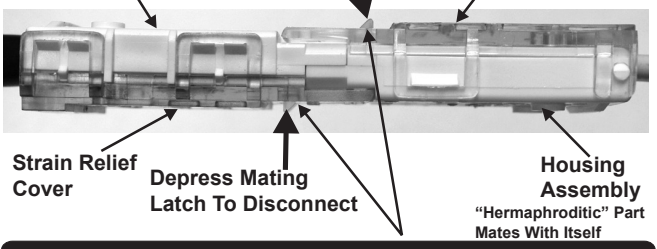

To release the connector system, depress both mating latches at the same time and pull the connectors apart. To reconnect, simply re-mate the connectors and slide them together until mating latches lock.

K. Installing Decorative Inside Cover

1. Remove the return air grill from the return air cover.
2. Place the return air cover up to the ceiling template.
3. Install cover to template with #8 x 3/8" blunt point Phillips head screws provided (6 required).
4. Reinstall filter return air grill into return air cover. Align tabs with mating notches and snap into place.
5. Install two hole plugs into screw holes in back of return air cover. See FIG. 24.

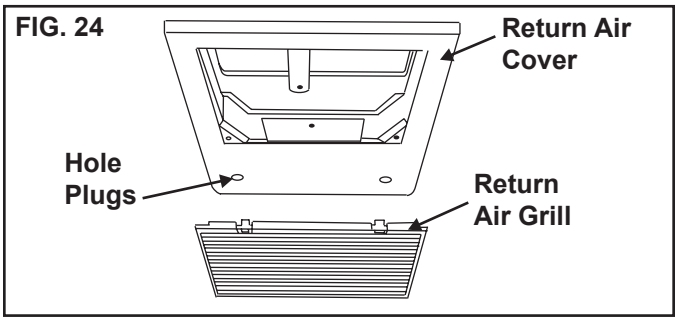

6. This completes the unit installation.

WIRING DIAGRAM
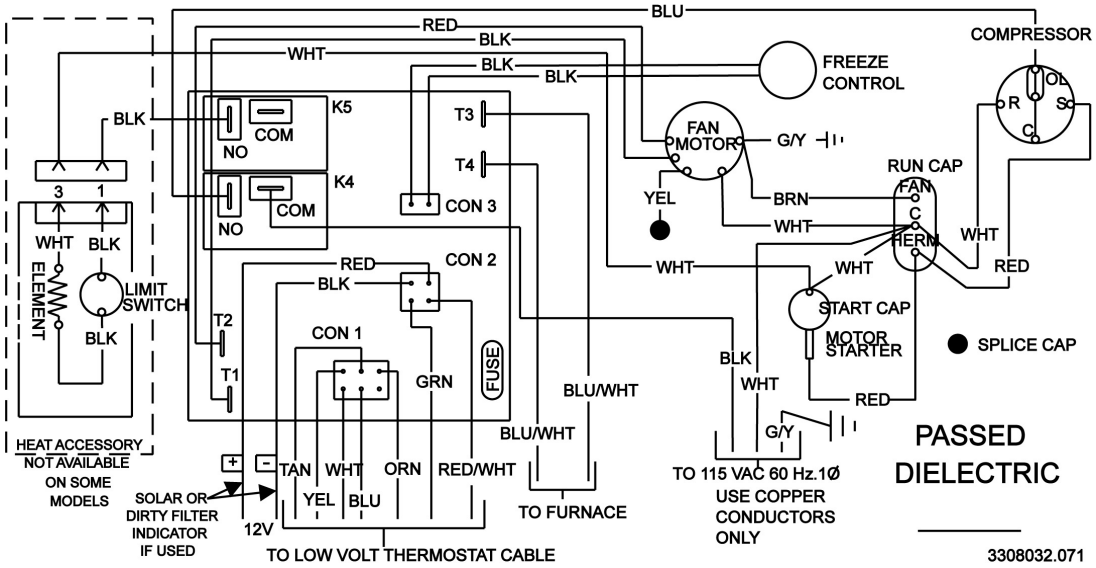
541416A Wiring Diagram